CENTRAL KOWLOON ROUTE

APS Commissioning Test Report (First Stage)

(CONDITION 2.20 OF

ENVIRONMENTAL PERMIT, EP-457/2013/D)

(December 2025)

路政署
HIGHWAYS DEPARTMENT
主要工程管理處
MAJOR WORKS PROJECT MANAGEMENT OFFICE

ERM

Environmental Permit No. EP-457/2013/D

Central Kowloon Route

Independent Environmental Checker Verification

Works Contract:	**Buildings, Electrical and Mechanical Works (HY/2019/13)**

Reference Document/Plan

Document/~~Plan~~ to be ~~Certified~~/ Verified:	APS Commissioning Test Report (First Stage)
Date of Report:	-
Date received by IEC:	04 December 2025

Reference EP Condition

Environmental Permit Condition: 2.20

Submission and Measures for Mitigating Operational Air Quality Impact

2.20 The Permit Holder shall, in accordance with the submission schedule as stipulated in the approved APS Commissioning Test Plan described in Condition 2.19 above, or otherwise approved by the Director, deposit with the Director four hard copies and one electronic copy of the APS Commissioning Test Report, which shall be certified by the ET Leader and verified by the IEC as conforming to the removal efficiency specified under Condition 2.18 above.

IEC Verification

I hereby verify that the above referenced document/~~plan~~ complies with the above referenced condition of EP-457/2013/D.

Ms Mandy To

Date: 04 December 2025

Independent Environmental Checker

Our ref: 0436942_IEC Verification Cert_BEM_APS Commissioning Test Report (First Stage)_20251204.docx

CINOTECH 漢臻
consultants limited

Room 1710, 17/F., Technology Park
18 On Lai Street, Shatin, Hong Kong
Tel: 852-2151 2083 Fax: 852-3107 1388
Website: http://www.cinotech.com.hk
General E-mail: info@cinotech.com.hk

Our ref.: MA20024/Corres/Out/EP2.20/DC251204

Gammon Construction Limited
22/F, Tower 1 and 2, The Quayside
77 Hoi Bun Road,
Kwun Tong, Hong Kong

By E-Mail
4 December 2025

Dear Sir / Madam,

Contract No. HY/2019/13

Central Kowloon Route – Buildings, Electrical and Mechanical Works

(Environmental Permit (EP) No. EP-457/2013/D)

Certification of Air Purification System Commissioning Test Report (First Stage)

We refer to the submission of the Air Purification System Commissioning Test Report (First Stage) received on 4 December 2025 via email.

Regarding Condition 2.20 of the Environmental Permit (EP No.: EP-457/2013/D), the Permit Holder shall, in accordance with the submission schedule as stipulated in the approved APS Commissioning Test Plan described in Condition 2.19 above, or otherwise approved by the Director, deposit with the Director four hard copies and one electronic copy of the APS Commissioning Test Report, which shall be certified by the ET Leader and verified by the IEC as conforming to the removal efficiency specified under Condition 2.18 above.

We have no adverse comments on the report. As the ET Leader, I hereby certify this first stage report in accordance with Condition 2.20 of the Environmental Permit.

Should you have any queries, please do not hesitate to contact Mr. Dave Chan at 2151 2097 or the undersigned at 2151 2072.

Yours sincerely,
Cinotech Consultants Ltd.

Ms. Betty Choi
Environmental Team Leader

Encl.

Abbreviation List

CCMS	Central Control and Monitoring System
CKR	Central Kowloon Route
DC	Direct Current
ESP	Electrostatic Participator
ET	Environmental Team
EP	Environemental Permit
EMSD	Electrical and Mechanical Services Department
FAT	Factory Acceptance Test
HV	High Voltage
HVB	Ho Man Tin Ventilation Building
KVB	Kai Tak Ventilation Building
IEC	Independent Environmental Checker
PSU	ESP Power Supply Unit
SAT	Site Acceptance Test
TVF	Tunnel Ventilation Fan
TVS	Tunnel Ventilation System
YVB	Yau Mei Tai Ventilation Building

Table of Content

1. Introduction

1.1. The Environmental Permit, EP-457/2013/D (hereafter referred as "the EP"), for the Central Kowloon Route was issued on 15 June 2021.

1.2. As stipulated in Condition 2.20 of the EP, the Permit Holder shall, in accordance with the submission schedule as stipulated in the approved Air Purification System (APS) Commissioning Test Plan described in Condition 2.19 of the EP, or otherwise approved by the Director, deposit with the Director four hard copies and one electronic copy of the APS Commissioning Test Report, which shall be certified by the ET Leader and verified by the IEC as conforming to the removal efficiency specified under Condition 2.18 of the EP.

1.3. Referring to Section 6 of the approved APS Commissioning Test Plan, the submission schedule for APS Commissioning Test Report is listed below:

APS Commissioning Test Report		**Tentative Submission Schedule**
First Stage Testing	(i) Factory Acceptance Test (FAT) - performance test of the Electrostatic Precipitator (ESP) filters - adsorption test for De-NO2 filter - performance tests of an integrated ESP and De-NO2 filters (ii) Material Test of the Denitrification Media (activated carbon) (iii) Site Acceptance Test - ESP HV Power Supply Units and ESP System - Integrated test of ESP and De-NO2 filters - Performance integrated test of Module (APS with associated TVF) with air flow emitted via tunnel portals of tunnel - Efficiency Tests for the APS	before the CKR tunnel is opened
Second Stage Testing	(iv) Calibration of the installed air monitoring stations (v) Post-commissioning Efficiency Test for each APS module over a continuous thirty calendar day period (vi) Review of criteria at lower inlet concertation level for PM10 and NO2	Approximately eight months after the CKR tunnel is opened

1.4. This submission of first stage APS Commissioning Test Report, which includes the Factory Acceptance Test (FAT), the material test of the denitrification media for the De-NO2 filter, and the Site Acceptance Test (SAT), to demonstrates the performance of the APS below before the commissioning of CKR tunnel in December 2025:-

Respirable Suspended Particles (RSP) PM10 – Removal efficiency

When inlet concentration equal to or greater than 0.5mg/m3, not less than 80% of RSP/PM10 shall be removed; and

When inlet concentration is lower than 0.5mg/m3, the outlet concentration shall not be greater than 0.1mg/m3. *Note

NO2 – Removal efficiency

When inlet concentration equal to or greater than 0.25ppm, not less than 80% of NO2 shall be removed; and

When inlet concentration is lower than 0.25ppm, the outlet concentration shall not be greater than 0.05ppm. *Note

*Note: The passing criteria at lower inlet concentration levels for PM10 and NO2 will be further reviewed in Second Stage Testing.

2. Factory Acceptance Test (FAT)

(Reference with Section 4.1 of the APS Commissioning Test Plan)

2.1. FAT was conducted in 11 to 17 May 2023 inside the factory by the APS specialist – Clean Tunnel Air International AS (CTA) to verify the performance of the Electrostatic Precipitator (ESP) using the accepted ESP HV Power Supply Units, the adsorption performance of the De-NO2 and the performance of an integrated ESP and De-NO2 Filters prior to manufacturing and delivery to Hong Kong.

The details of ESP and the performance of an integrated ESP and De-NO2 Filters are summarized below:

Date: 11 to 14 & 16 to 17 May 2023
Location: No 1199 Yixian Rd, Shanghai, China
Company: Clean Tunnel Air International AS (CTA)

For detail of De-NO2 filters, it was carried out at Test Lab with address below:

Date: 15 May 2023
Location: No.88, Suzhou East Road, Taicang, Suzhou, Jiangsu, China
Company: Trane Air Conditioning System (China) Laboratory

The attendance of FAT was involved below:-

Highways Department (HyD)
Electrical & Mechanical Services Department (EMSD)
Arup-Mott MacDonald Joint Venture (AMMJV)
Gammon Construction Ltd. (GCL)
Jardine Engineering Corporation (JEC)
Clean Tunnel Air International AS (CTA)

Part A: Performance Tests of the Electrostatic Precipitator (ESP) Filters

2.2. The tests were carried out on 14 May 2023 inside the factory by the APS specialist - CTA at conditions similar to the tunnel environment and the PM10 concentration was measured before and after the ESP modules. 10 nos. of ESP filters with stainless steel supporting framing were assembled to overall size not less than 2m(W) x 2m(H).

2.3. The removal efficiency for ESP filter was performed in 3 different stages: 1) PM10 alone, 2) PM10 and PM2.5 and 3) PM10, PM2.5 and PM1 at concentrations which simulate concentrations in the tunnel exhaust environment. Results of PM10 removal efficiency complied with Sections 3.1 of the APS Commissioning Test Plan.

2.4. The test reports for performance of the ESP Filters are enclosed in **Appendix A**. Removal efficiency test records for ESP Filters are summarized below:

Table 1 - Summary for Removal Efficiency Test Record for ESP Filters when inlet concentration lower than 0.5mg/m^3

Test Item	Testing Condition / Environment	Inlet PM10 Concentration Criteria	Measured Conditions	Measured Results	
			PM10 Inlet Concentration (mg/m3)	PM10 Outlet Concentration (mg/m3)	Passing Criteria (PM10 level ≤ 0.1 mg/m3)
1	PM10	PM10 < 0.5 mg/m^3 (Range start at value at 0.2-0.4 mg/m3 stably)	0.2156	0.0126	Pass
			0.2907	0.0144	Pass
			0.2482	0.0170	Pass
2	PM10 and PM2.5		0.2350	0.0144	Pass
			0.3035	0.0172	Pass
			0.2785	0.0154	Pass
3	PM10, PM2.5 and PM1		0.2735	0.0164	Pass
			0.2759	0.0140	Pass
			0.2211	0.0157	Pass

Table 2 - Summary for Removal Efficiency Test Record for ESP Filters when inlet concentration equal to or greater than 0.5mg/m^3

Test Item	Testing Condition / Environment	Inlet PM10 Concentration Criteria	Measured Conditions	Measured Results		
			PM10 Inlet Concentration (mg/m3)	PM10 Outlet Concentration (mg/m3)	PM10 Removal Rate (%)	Passing Criteria (≥ 80% PM10 Removed)
4	PM10	PM10 ≥ 0.5 mg/m^3 (Range start at value at 0.6-0.9 mg/m3 stably)	0.7296	0.0302	95.9	Pass
			0.7680	0.0306	96.0	Pass
			0.8724	0.0330	96.2	Pass
5	PM10 and PM2.5		0.6291	0.0318	94.9	Pass
			0.7380	0.0276	96.3	Pass
			0.8595	0.0263	96.9	Pass
6	PM10, PM2.5 and PM1		0.7822	0.0274	96.5	Pass
			0.6450	0.0302	95.3	Pass
			0.7678	0.0302	96.1	Pass

Remarks:

1. Testing conditions
   - ESP Air Velocity = 5.37 + 0.5 m/s
   - Air Temperature / Relative Humidity in 50℃±2℃ /95% ±5%
   - Ionizer / Collector Voltages in 14kV / 6.5kV

Part B: Adsorption Tests for De-NO2 Filters

2.5. The factory adsorption test of De-NO2 filter was carried out on 15 May 2023 inside Trane Air Conditioning System (China) Laboratory by the APS specialist - CTA at an environment similar to the APS plenum in terms of temperature, humidity and the design airflow velocity. The specimen size 400(L) x 400(H) x 430mm(D) of the De-NO2 filters was assembled for adsorption test.

2.6. The removal efficiency for De-NO2 filter was performed in 3 different stages: 1) NO2 alone, 2) NO2 and O3, 3) NO2 and Toluene at concentration which simulate concentrations in the tunnel exhaust environment. Results of NO2 adsorption performance complied with Sections 3.1 of the APS Commissioning Test Plan.

2.7. The test reports are enclosed in **Appendix A**. Adsorption Test Record for De-NO2 Filters are summarized below:

Table 3 - Summary for Adsorption Test Record for De-NO2 Filters when inlet concentration lower than 0.25ppm

Item	Testing Condition / Environment	Inlet NO2 Concentration Criteria	Measured Conditions	Measured Results	
			NO2 Inlet Concentration (ppm)	NO2 Outlet Concentration (ppm)	Passing Criteria (NO2 ≤ 0.05ppm)
1	NO2 alone	NO2 < 0.25 ppm, (NO2 range start at value at 0.05-0.2ppm stably)	0.194	0.003	**Pass**
			0.180	0.003	**Pass**
			0.177	0.002	**Pass**

Table 4 - Summary for Adsorption Test Record for De-NO2 Filters when inlet concentration equal to or greater than 0.25ppm

Item	Testing Condition / Environment	Inlet NO2 Concentration Criteria	Measured Conditions	Measured Results		
			NO2 Inlet Concentration (ppm)	NO2 Outlet Concentration (ppm)	NO2 Adsorption Rate (%)	Passing Criteria (≥ 80% NO2 Removed)
1	NO2 alone	NO2 ≥ 0.25 ppm (NO2 Range start at value at 0.3-0.6ppm stably)	0.457	0.003	99.34	**Pass**
			0.450	0.003	99.33	**Pass**
			0.425	0.002	99.52	**Pass**
2	NO2 / O3	NO2 ≥ 0.25 ppm + ozone 0.5ppm ±5% (NO2 range start at value at 0.3-0.6ppm stably)	0.365	0.002	99.45	**Pass**
			0.342	0.002	99.41	**Pass**
			0.324	0.002	99.38	**Pass**
3	NO2 / Toluene	NO2 ≥ 0.25 + toluene 10 ppm ±5% (NO2 range start at value at 0.3-0.6ppm stably)	0.333	0.004	98.79	**Pass**
			0.318	0.002	99.37	**Pass**
			0.300	0.002	99.33	**Pass**

Remarks:

1. Testing conditions
   - De-NO2 Face Velocity = 0.5 + 0.05m/s
   - Air Temperature / Relative Humidity in 50℃±2℃ / 95% ±5%

Part C: Performance Tests of An Integrated ESP and De-NO2 Filters

2.8. The integrated test of the ESP and De-NO2 filters was carried out on 12 May 2023 inside the factory by the APS specialist - CTA at conditions similar to the tunnel environment and measured the PM10 and NO2 concentration before and after the system. 10 nos. of ESP cells and 55 nos. of carbon boxes with a stainless steel supporting framing were assembled.

2.9. The performance tests of an integrated ESP and De-NO2 filters was performed in different inlet concentration for PM10 and NO2, injected voltages for ESP ionizer and collector plates which in an environment similar to the APS plenum of 50℃ / 40% Relative Humidity and 50℃ / 95% Relative Humidity under design face velocity of ESP filter in 5.37 m/s. Results complied with Sections 3.1 of the APS Commissioning Test Plan.

2.10. The test reports for an integrated performance for an integrated ESP Filters and De-NO2 Filters are enclosed in **Appendix A**. Removal efficiency test records are summarized below:

Table 5 - Summary for Integrated Test of An Integrated ESP and De-NO2 Filters when PM10 inlet concentration lower than 0.5mg/m^3 and NO2 inlet concentration lower than 0.25ppm

Item	Testing Condition / Environment	Inlet Concentration Criteria	Measured Conditions	Measured Results	
			Inlet Concentration (mg/m3 for PM10) (ppm for NO2)	Outlet Concentration (mg/m3 for PM10) (ppm for NO2)	Passing Criteria (PM10 ≤ 0.1 mg/m3) (NO2 ≤ 0.05ppm)
1	PM10 (13kV / 6kV) (50°C±2°C / 40%± 5%)	< 0.5 mg/m3 (Range start at value at 0.2-0.4 mg/m3 stably)	0.3234	0.0107	**Pass**
			0.3489	0.0136	**Pass**
			0.3582	0.0124	**Pass**
	NO2 (50°C±2°C / 40%± 5%)	< 0.25 ppm (Range start at value at 0.05-0.2ppm stably)	0.0516	0.0010	**Pass**
			0.0506	0.0010	**Pass**
			0.0493	0.0010	**Pass**
2	PM10 (14kV / 6.5kV) (50°C±2°C / 40%± 5%)	< 0.5 mg/m3 (Range start at value at 0.2-0.4 mg/m3 stably)	0.3126	0.0141	**Pass**
			0.3126	0.0141	**Pass**
			0.3057	0.0148	**Pass**
	NO2 (50°C±2°C / 40%± 5%)	< 0.25 ppm (Range start at value at 0.05-0.2ppm stably)	0.0524	0.0010	**Pass**
			0.0523	0.0010	**Pass**
			0.0508	0.0010	**Pass**
5	PM10 (13kV / 6kV) (50°C±2°C / 95%± 5%)	< 0.5 mg/m3 (Range start at value at 0.2-0.4 mg/m3 stably)	0.3051	0.0084	**Pass**
			0.3051	0.0117	**Pass**
			0.3015	0.0120	**Pass**
	NO2 (50°C±2°C / 95%± 5%)	< 0.25 ppm (Range start at value at 0.05-0.2ppm stably)	0.0582	0.0010	**Pass**
			0.0583	0.0010	**Pass**
			0.0600	0.0010	**Pass**
6	PM10 (14kV / 6.5kV) (50°C±2°C / 95%± 5%)	< 0.5 mg/m3 (Range start at value at 0.2-0.4 mg/m3 stably)	0.2551	0.0104	**Pass**
			0.2339	0.0113	**Pass**
			0.2933	0.0113	**Pass**
	NO2 (50°C±2°C / 95%± 5%)	< 0.25 ppm (Range start at value at 0.05-0.2ppm stably)	0.0599	0.0010	**Pass**
			0.0598	0.0010	**Pass**
			0.0603	0.0010	**Pass**

Remarks:

1. Testing conditions
   - ESP Air Velocity = 5.37 + 0.5 m/s
   - De-NO2 Face Velocity = 0.5 + 0.05 m/s

Table 6 - Summary for Integrated Test of An Integrated ESP and De-NO2 Filters when PM10 inlet concentration equal to or greater than 0.5mg/m^3 and NO2 inlet concentration equal to or greater than 0.25ppm

Item	Testing Condition / Environment	Inlet Concentration Criteria	Measured Conditions	Measured Results		
			Inlet Concentration (mg/m3 for PM10) (ppm for NO2)	Outlet Concentration (mg/m3 for PM10) (ppm for NO2)	Removal / Adsorption Rate (%)	Passing Criteria (≥ 80% Removed)
3	PM10 (13kV / 6kV) (50°C±2°C / 40%± 5%)	≥ 0.5 mg/m3 (Range start at value at 0.6-0.9 mg/m3 stably)	0.7661	0.0270	96.5	**Pass**
			0.8739	0.0370	95.8	**Pass**
			0.8500	0.0391	95.4	**Pass**
	NO2 (50°C±2°C / 40%± 5%)	≥ 0.25 ppm (Range start at value at 0.3-0.6ppm stably)	0.3689	0.0093	97.5	**Pass**
			0.4020	0.0211	94.8	**Pass**
			0.3700	0.0176	95.2	**Pass**
4	PM10 (14kV / 6.5kV) (50°C±2°C / 40%± 5%)	≥ 0.5 mg/m3 (Range start at value at 0.6-0.9 mg/m3 stably)	0.7449	0.0290	96.1	**Pass**
			0.7669	0.0261	96.6	**Pass**
			0.7930	0.0277	96.5	**Pass**
	NO2 (50°C±2°C / 40%± 5%)	≥ 0.25 ppm (Range start at value at 0.3-0.6ppm stably)	0.3154	0.0151	95.2	**Pass**
			0.3140	0.0151	95.2	**Pass**
			0.3111	0.0165	94.7	**Pass**
7	PM10 (13kV / 6kV) (50°C±2°C / 95%± 5%)	≥ 0.5 mg/m3 (Range start at value at 0.6-0.9 mg/m3 stably)	0.7552	0.0222	97.1	**Pass**
			0.7683	0.0178	97.7	**Pass**
			0.6354	0.0195	96.9	**Pass**
	NO2 (50°C±2°C / 95%± 5%)	≥ 0.25 ppm (Range start at value at 0.3-0.6ppm stably)	0.4485	0.0416	90.7	**Pass**
			0.4466	0.0419	90.6	**Pass**
			0.4395	0.0420	90.4	**Pass**
8	PM10 (14kV / 6.5kV) (50°C±2°C / 95%± 5%)	≥ 0.5 mg/m3 (Range start at value at 0.6-0.9 mg/m3 stably)	0.8148	0.0158	98.1	**Pass**
			0.7259	0.0150	97.9	**Pass**
			0.7311	0.0161	97.8	**Pass**
	NO2 (50°C±2°C / 95%± 5%)	≥ 0.25 ppm (Range start at value at 0.3-0.6ppm stably)	0.4750	0.0450	90.5	**Pass**
			0.4691	0.0454	90.3	**Pass**
			0.4691	0.0441	90.6	**Pass**

Remarks:

1. Testing conditions
   - ESP Air Velocity = 5.37 + 0.5 m/s
   - De-NO2 Face Velocity = 0.5 + 0.05 m/s

3. Material Test of the Denitrification Media (Activated Carbon)

(Reference with Section 4.2 of the APS Commissioning Test Plan)

3.1. The material test of the denitrification media (activated carbon) for De-NO2 filter was carried out during the manufacturing process of the denitrification media by an accredited independent laboratory "Test Center of China Coal Research Institute, Coal Industry Energy Conservation Monitoring Center". Results (Table 9) from an accredited independent laboratory complied to the Manufacturer Specifications and were tested in accordance with the Relevant Standard listed under Table 7.

3.2. The tests were carried out for the denitrification media (activated carbon) at a rate of one (1) 1.5 kg sample of the denitrification media (sample) per 25,000kg of the denitrification media (material) by the independent laboratory. The sample was tested in accordance with the following standards.

Table 7: Specification for the Denitrification Media (Activated Carbon)

Test Items	**Relevant Standard**	**Manufacturer Specification**
Carbon Tetrachloride Adsorption CTC	ASTM D3467	≥ 60 wt%
Moisture	ASTM D2867	≤ 5 wt%
Hardness	ASTM D3802	≥ 90 unit
Bulk Density	ASTM D2854	-
Ignition Temp.	ASTM D3466	-
Ash Content	ASTM D2866	≤ 14 wt%
Surface Area	GB/T 7702	-
Particle size	ASTM D2862	≤ 5 wt%

3.3. 3 nos. of batches (572 bags each, 480kg/bag, 274,560 kg total per batch) of the Denitrification Media (activated carbon) were procured. For every set of 52 bags of the Dentification Media, a 1.5 kg sample was collected and tested by an accredited independent laboratory "Test Center of China Coal Research Institute, Coal Industry Energy Conservation Monitoring Center" with below summarized table.

Table 8: Material Test Report Summary for the Denitrification Media (Activated Carbon)

Batch	**Qty**		**Material Test Report Reference No. by an accredited independent laboratory (1 report for 52 bags)**
	No. of Bags (480kg/bag)	**Total Weight**	
1	572 bags (11 sets 52 bags)	274,560 kg	2024F-HT0153, 2024F-HT0154, 2024F-HT0083, 2024F-HT0084, 2024F-HT0088, 2024F-HT0089, 2024F-HT0090, 2024F-HT0100, 2024F-HT0101, 2024F-HT0102, 2024F-HT0103,
2	572 bags (11 sets 52 bags)	274,560 kg	2024F-HT0104, 2024F-HT0105, 2024F-HT212, 2024F-HT0217, 2024F-HT0218, 2024F-HT0226, 2024F-HT0227, 2024F-HT0241, 2024F-HT0242, 2024F-HT0265, 2024F-HT0266
3	572 bags (11 sets 52 bags)	274,560 kg	2025F-HT0022, 2025F-HT0023, 2024F-HT0289, 2024F-HT0290, 2025F-HT0004, 2025F-HT0005, 2025F-HT0006, 2025F-HT0007,2025F-HT0008, 2025F-HT0009, 2025F-HT0010

3.4. The test reports are enclosed in **Appendix B**. The test records are summarized below:

Table 9: Summary for Material Test for the Denitrification Media (Activated Carbon)

Test Item / Report	**CTC (wt%)**	**Moisture (wt%)**	**Hardness (unit)**	**Bulk Density (g/mL)**	**Ignition Temp. (oC)**	**Ash Content (wt%)**	**Surface Area (m2/g)**	**Particle size (wt%)**	**Result**
Criteria	**≥60 wt%**	**≤5 wt%**	**≥90 unit**	**-**	**-**	**≤ 14 wt%**	**-**	**≤ 5 wt%**	
HT0153	62.28	1.07	99	0.483	518	9.67	1009	0.61	**Pass**
HT0154	60.67	0.93	99	0.484	516	9.72	1011	0.70	**Pass**
HT0083	62.75	0.55	99	0.485	503	9.48	1023	0.58	**Pass**
HT0084	62.24	0.39	99	0.497	513	9.37	1017	0.44	**Pass**
HT0088	63.34	0.76	98	0.478	511	9.30	1008	0.89	**Pass**
HT0089	62.31	0.88	98	0.477	509	9.36	1011	0.67	**Pass**
HT0090	61.21	0.86	98	0.477	518	8.42	1010	0.95	**Pass**
HT0100	62.98	0.48	98	0.477	515	9.69	1040	0.95	**Pass**
HT0101	61.08	0.53	98	0.479	518	9.67	1045	0.85	**Pass**
HT0102	62.11	0.45	98	0.47	520	9.74	1017	0.68	**Pass**
HT0103	63.20	0.50	98	0.482	512	9.60	1023	0.34	**Pass**
HT0104	65.83	0.52	98	0.476	518	9.98	1038	1.01	**Pass**
HT0105	65.58	0.64	98	0.478	523	9.77	1017	0.82	**Pass**
HT0212	63.38	1.46	99	0.48	517	8.96	1014	1.10	**Pass**
HT0217	63.03	3.67	98	0.467	509	9.42	1008	1.38	**Pass**
HT0218	64.60	2.19	98	0.491	537	9.31	1022	1.30	**Pass**
HT0226	62.68	2.26	98	0.491	540	9.10	1039	0.90	**Pass**
HT0227	63.58	2.44	98	0.493	514	9.14	1042	1.29	**Pass**
HT0241	62.28	1.46	98	0.483	516	8.98	1049	0.91	**Pass**
HT0242	62.33	1.46	98	0.490	520	8.90	1008	1.14	**Pass**
HT0265	66.98	1.27	98	0.473	529	9.54	1044	1.90	**Pass**
HT0266	63.42	1.69	98	0.490	512	9.44	1032	0.89	**Pass**
HT0022	62.60	0.42	99	0.483	528	9.41	1033	0.51	**Pass**
HT0023	61.56	0.37	99	0.479	536	9.10	1040	0.47	**Pass**
HT0289	62.67	0.91	98	0.485	510	9.15	1027	1.09	**Pass**
HT0290	63.20	0.78	98	0.482	514	9.01	1034	1.21	**Pass**
HT0004	62.40	0.72	98	0.479	534	10.27	1039	1.04	**Pass**
HT0005	60.72	0.92	98	0.476	538	10.54	1033	0.96	**Pass**
HT0006	65.57	0.79	98	0.471	533	9.92	1029	1.14	**Pass**
HT0007	64.98	0.86	98	0.477	541	9.66	1028	1.03	**Pass**
HT0008	63.41	0.81	99	0.478	538	9.79	1038	0.50	**Pass**
HT0009	64.64	0.80	99	0.473	535	9.62	1030	0.63	**Pass**
HT0010	62.15	0.82	98	0.477	526	9.58	1025	0.46	**Pass**

4. Site Acceptance Test (SAT)

(Reference with Section 4.3 of the APS Commissioning Test Plan)

4.1. Upon completion of the installation, the SAT was conducted to verify:

- **Part A: ESP HV Power Supply Units** - Installation cable test and function test for ESP HV Power Supply Units to comply with Manufactuer Recommendation and EMSD Code of Practice.

- **Part B: ESP System** - Continuity tests for ESP Filter (Ionizer and Collector).

- **Part C: Integrated Test of ESP & De-NO2 Filters** - Integrated Functional Testing of ESP and De-NO2 filters with associated TVF.

- **Part D: Performance Integrated Test of Module** - Tunnel portal emissions ≤ 10% of total ventilation.

- **Part E: Efficiency Tests of APS** - Compliance with performance criteria at three ventilation buildings for APS Efficiency Test.

The details of SAT and the performance of an integrated ESP and De-NO2 Filters are summarized below:
Date: January 2025 to October 2025
Location: YVB, HVB & KVB of CKR project

The attendance of SAT was involved below:-
Electrical & Mechanical Services Department (EMSD)
Arup-Mott MacDonald Joint Venture (AMMJV)
Gammon Construction Ltd. (GCL)
Jardine Engineering Corporation (JEC)
Clean Tunnel Air International AS (CTA)

<u>Part A: ESP HV Power Supply Units</u>

4.2. The following tests and inspections were conducted on the completed the installation of ESP HV Power Supply Units and associated HV DC cable distribution system to verify:

- Installation Inspection of ESP HV Power Supply Cabinets
- Cable Test for HV DC Cables
- Electrical Installation and functional/performance tests for ESP cells

4.3. All ESP HV Power Supply Units were tested and verified that the installed ESP HV Power Supply with associated HV DC cables were installed in accordance with APS specialist - CTA requirement and the relevant requirement under EMSD CoP.

4.4. The test reports for ESP HV Power Supply Units are enclosed in **Appendix D**.

Part B: ESP Filters

4.5. The continuity tests were conducted on the assembled the ESP filters with associated busbars to verify the proper connections on the ionization and collector of each ESP cell in each sub-assembly with no breaks or short circuit. Also, it verified that each ESP cell in each subassembly is properly grounded of ESP cells and busbars.

4.6. All ESP cells were tested and verified that the installed ESP filters were installed with accordance APS specialist - CTA requirement and the relevant requirement under EMSD CoP.

4.7. The test reports for ESP System are enclosed in **Appendix C**.

Part C: Integrated Test of ESP and De-NO2 Filters

4.8. The integrated ESP and De-NO2 filters were tested together with the associated TVS under CCMS automatic mode operation.

4.9. Different scenario of condition of tests were conducted to demonstrate and verify that the system operated properly and functioned as intended.

4.10. The test reports which are related to the Integrated Test of ESP and De-NO2 filters are extracted in **Appendix E**.

Part D: Performance Integrated Test of Module (APS with associated TVF) with Tunnel Portals Emission

4.11. The test verified that APS and TVF maintain tunnel portal emissions ≤ 10% of total ventilation.

4.12. The integrated test for CCMS/TVS/APS was conducted to demonstrate and ensure that tunnel portal emissions at the westbound and eastbound portals are less than 8% (current preset value) of total ventilation. Various combinations and flow rates of the TVF/APS modules will be automatically controlled by CCMS, such as operation modes of YVB and HVB TVF/APS modules (e.g. N80, N81 to N90) for the Westbound Tunnel, and operation modes of KVB and HVB TVF/APS modules (e.g. N30, N31 to N40) for the Eastbound Tunnel.

4.13. The test reports for Performance Integrated Test on above different operation modes (APS with associated TVF) are enclosed in **Appendix F**.

Part E: Efficiency Tests of APS

4.14. Efficiency tests at three ventilation buildings used dust generators and NO2 gas cylinders to simulate tunnel pollutants.

4.15. Calibrated air monitoring stations measured concentrations at APS intake and discharge. Refer to **Appendix H** for AMS calibration certificates.

4.16. Results (Tables 12-15) demonstrated compliance with Sections 5.2.1 and 5.2.2 of the APS Performance Monitoring and Contingency Plan.

4.17. The test reports for Integrated Test of ESP and De-NO2 filters are enclosed in **Appendix G**. Removal efficiency is summarized below:

Table 12: PM10 Removal Efficiency Test Result when PM10 inlet concentration lower than 0.5mg/m3

Location	**Testing Condition / Environment**	**Inlet Concentration Criteria**	**Measured Conditions**	**Measured Results**	
			PM10 Inlet Concentration (mg/m3)	**PM10 Outlet Concentration (mg/m3)**	**Passing Criteria (PM10 level ≤ 0.1 mg/m3)**
YVB APS Plenum 1	PM10	< 0.5 mg/m3	0.1660	0.0026	**Pass**
			0.4666	0.0116	**Pass**
			0.3622	0.0102	**Pass**
YVB APS Plenum 2	PM10	< 0.5 mg/m3	0.4700	0.0182	**Pass**
			0.3023	0.0061	**Pass**
			0.2892	0.0112	**Pass**
			0.2937	0.011	**Pass**
YVB APS Plenum 3	PM10	< 0.5 mg/m3	0.3400	0.0085	**Pass**
			0.4062	0.0104	**Pass**
			0.3838	0.0094	**Pass**
			0.3944	0.0090	**Pass**
KVB APS Plenum 1	PM10	< 0.5 mg/m3	0.3222	0.0019	**Pass**
			0.3424	0.0174	**Pass**
			0.3606	0.0206	**Pass**
			0.3252	0.0142	**Pass**
			0.3050	0.0162	**Pass**
KVB APS Plenum 2	PM10	< 0.5 mg/m3	0.2486	0.0186	**Pass**
			0.3842	0.0242	**Pass**
			0.3710	0.0248	**Pass**
			0.3618	0.0242	**Pass**
			0.3810	0.0208	**Pass**
KVB APS Plenum 3	PM10	< 0.5 mg/m3	0.3378	0.0206	**Pass**
			0.3590	0.0186	**Pass**
			0.3542	0.0170	**Pass**
			0.3720	0.0178	**Pass**
			0.3646	0.0170	**Pass**
			0.2248	0.0138	**Pass**
			0.4568	0.0218	**Pass**
HVB APS Plenum 1	PM10	< 0.5 mg/m3	0.2106	0.0148	**Pass**
			0.2876	0.0140	**Pass**
			0.3078	0.0136	**Pass**
			0.3084	0.0140	**Pass**
			0.3782	0.0156	**Pass**
			0.4554	0.0124	**Pass**
			0.2180	0.0116	**Pass**
			0.4184	0.0084	**Pass**
			0.4068	0.0078	**Pass**

Table 12: PM10 Removal Efficiency Test Result when PM10 inlet concentration lower than 0.5mg/m3 (Cont'd)

Location	**Testing Condition / Environment**	**Inlet Concentration Criteria**	**Measured Conditions**	**Measured Results**	
			PM10 Inlet Concentration (mg/m3)	**PM10 Outlet Concentration (mg/m3)**	**Passing Criteria (PM10 level ≤ 0.1 mg/m3)**
HVB APS Plenum 2	PM10	< 0.5 mg/m3	0.2586	0.0100	**Pass**
			0.3032	0.0108	**Pass**
			0.3286	0.0112	**Pass**
			0.3302	0.0116	**Pass**
			0.3356	0.0120	**Pass**
			0.0274	0.0030	**Pass**
			0.2348	0.0278	**Pass**
HVB APS Plenum 3	PM10	< 0.5 mg/m3	0.1222	0.0196	**Pass**
			0.1602	0.0186	**Pass**
			0.3210	0.0220	**Pass**
			0.2834	0.0194	**Pass**
			0.2382	0.0252	**Pass**
			0.1576	0.0162	**Pass**
			0.3796	0.0126	**Pass**
			0.2350	0.0118	**Pass**

Table 13: NO2 Adsorption Rate Test Result when NO2 inlet concentration lower than 0.25 ppm

Locations	Testing Condition / Environment	Inlet Concentration Criteria	Measured Conditions	Measured Results	
			Inlet Concentration (PPM)	Outlet Concentration (PPM)	Passing Criteria (NO2 ≤ 0.05ppm)
YVB APS Plenum 1	NO2	< 0.25 ppm	0.1096	0.0068	**Pass**
			0.0818	0.0066	**Pass**
			0.1220	0.0088	**Pass**
			0.1566	0.0114	**Pass**
			0.2082	0.0132	**Pass**
			0.0810	0.0104	**Pass**
YVB APS Plenum 2	NO2	< 0.25 ppm	0.1056	0.0106	**Pass**
			0.1700	0.0140	**Pass**
			0.1836	0.0158	**Pass**
			0.1652	0.0134	**Pass**
YVB APS Plenum 3	NO2	< 0.25 ppm	0.2058	0.0110	**Pass**
			0.2424	0.0148	**Pass**
			0.2084	0.0140	**Pass**
			0.1834	0.0132	**Pass**
			0.1772	0.0138	**Pass**
KVB APS Plenum 1	NO2	< 0.25 ppm	0.1182	0.0160	**Pass**
			0.2248	0.0242	**Pass**
			0.1924	0.0222	**Pass**
			0.1624	0.0194	**Pass**
			0.1828	0.0218	**Pass**
KVB APS Plenum 2	NO2	< 0.25 ppm	0.1348	0.0132	**Pass**
			0.2452	0.0350	**Pass**
			0.1690	0.0234	**Pass**
KVB APS Plenum 3	NO2	< 0.25 ppm	0.2298	0.0132	**Pass**
			0.1446	0.0122	**Pass**
			0.1238	0.0108	**Pass**
			0.1188	0.0106	**Pass**
HVB APS Plenum 1	NO2	< 0.25 ppm	0.1884	0.0094	**Pass**
			0.2184	0.0120	**Pass**
			0.2002	0.0164	**Pass**
			0.2392	0.0062	**Pass**
			0.0758	0.0034	**Pass**
HVB APS Plenum 2	NO2	< 0.25 ppm	0.0960	0.0132	**Pass**
			0.1672	0.0212	**Pass**
			0.2218	0.0232	**Pass**
			0.0824	0.0134	**Pass**
HVB APS Plenum 3	NO2	< 0.25 ppm	0.2370	0.0282	**Pass**
			0.1364	0.0212	**Pass**
			0.1604	0.0228	**Pass**
			0.1038	0.0194	**Pass**
			0.1206	0.0198	**Pass**
			0.1424	0.0216	**Pass**

Table 14: PM10 Removal Efficiency Test Result when PM10 inlet concentration greater than or equal to 0.5mg/m3

Locations	Testing Condition / Environment	Inlet Concentration Criteria	Measured Conditions	Measured Results		
			PM10 Inlet Concentration (mg/m3)	PM10 Outlet Concentration (mg/m3)	PM10 Removal Rate (%)	Passing Criteria (≥ 80% PM10 Removed)
YVB APS Plenum 1	PM10	≥ 0.5 mg/m3	0.5355	0.0114	97.9%	**Pass**
			0.6322	0.0130	97.9%	**Pass**
			0.6560	0.0130	98.0%	**Pass**
			0.5590	0.0128	97.7%	**Pass**
			0.5120	0.0120	97.7%	**Pass**
YVB APS Plenum 2	PM10	≥ 0.5 mg/m3	0.5166	0.0194	96.2%	**Pass**
			0.5254	0.0208	96.0%	**Pass**
			0.5818	0.0208	96.4%	**Pass**
			0.5634	0.0190	96.6%	**Pass**
YVB APS Plenum 3	PM10	≥ 0.5 mg/m3	0.5637	0.0053	99.1%	**Pass**
			0.7438	0.0118	98.4%	**Pass**
			0.6711	0.0115	98.3%	**Pass**
KVB APS Plenum 1	PM10	≥ 0.5 mg/m3	0.5184	0.0144	97.2%	**Pass**
			0.6218	0.0162	97.4%	**Pass**
			0.6468	0.0168	97.4%	**Pass**
			0.6116	0.0242	96.0%	**Pass**
			0.5394	0.0260	95.2%	**Pass**
KVB APS Plenum 2	PM10	≥ 0.5 mg/m3	0.7140	0.0278	96.1%	**Pass**
			0.5976	0.0260	95.6%	**Pass**
			0.6080	0.0266	95.6%	**Pass**
			0.6150	0.0248	96.0%	**Pass**
			0.6142	0.0258	95.8%	**Pass**
KVB APS Plenum 3	PM10	≥ 0.5 mg/m3	0.7004	0.0170	97.6%	**Pass**
			0.7400	0.0166	97.8%	**Pass**
			1.0002	0.0202	98.0%	**Pass**
HVB APS Plenum 1	PM10	≥ 0.5 mg/m3	0.5068	0.0098	98.1%	**Pass**
HVB APS Plenum 2	PM10	≥ 0.5 mg/m3	0.5778	0.0108	98.1%	**Pass**
			0.7934	0.0184	97.7%	**Pass**
			0.7548	0.0186	97.5%	**Pass**
HVB APS Plenum 3	PM10	≥ 0.5 mg/m3	0.5342	0.0160	97.0%	**Pass**
			0.5522	0.0162	97.1%	**Pass**

Table 15: NO2 Adsorption Rate Test Result when NO2 inlet concentration greater than or equal to 0.25ppm

Locations	Testing Condition / Environment	Inlet Concentration Criteria	Measured Conditions	Measured Results		
			Inlet Concentration (PPM)	Outlet Concentration (PPM)	Adsorption Rate (%)	Passing Criteria (≥ 80% NO2 Removed)
YVB APS Plenum 1	NO2	≥ 0.25 ppm	0.4324	0.0224	94.8%	**Pass**
			0.4432	0.0244	94.5%	**Pass**
YVB APS Plenum 2	NO2	≥ 0.25 ppm	0.4730	0.0294	93.8%	**Pass**
			0.4302	0.0268	93.8%	**Pass**
			0.2840	0.0204	92.8%	**Pass**
YVB APS Plenum 3	NO2	≥ 0.25 ppm	0.3528	0.0214	93.9%	**Pass**
			0.3462	0.0226	93.5%	**Pass**
KVB APS Plenum 1	NO2	≥ 0.25 ppm	0.3942	0.0354	91.0%	**Pass**
			0.6066	0.0534	91.2%	**Pass**
			0.4208	0.0390	90.7%	**Pass**
KVB APS Plenum 2	NO2	≥ 0.25 ppm	0.2518	0.0290	88.5%	**Pass**
			0.2846	0.0348	87.8%	**Pass**
			0.2510	0.0320	87.3%	**Pass**
			0.2846	0.0348	87.8%	**Pass**
			0.3196	0.0402	87.4%	**Pass**
KVB APS Plenum 3	NO2	≥ 0.25 ppm	0.2580	0.0160	93.8%	**Pass**
			0.2962	0.0180	93.9%	**Pass**
			0.2648	0.0180	93.2%	**Pass**
HVB APS Plenum 1	NO2	≥ 0.25 ppm	0.3072	0.0218	92.9%	**Pass**
			0.3268	0.0222	93.2%	**Pass**
			0.3138	0.0200	93.6%	**Pass**
HVB APS Plenum 2	NO2	≥ 0.25 ppm	0.2562	0.0266	89.6%	**Pass**
			0.2600	0.0260	90.0%	**Pass**
			0.2902	0.0320	89.0%	**Pass**
			0.3144	0.0312	90.1%	**Pass**
			0.2972	0.0292	90.2%	**Pass**
			0.2522	0.0228	91.0%	**Pass**
HVB APS Plenum 3	NO2	≥ 0.25 ppm	0.3792	0.0418	89.0%	**Pass**
			0.2738	0.0354	87.1%	**Pass**

Appendix A – Factory Acceptance Test (FAT) Reports

FAT Test Report for ESP Removal Efficiency Test (section 4.1.7.1)

Project: HY/2019/13 Central Kowloon Route Buildings
Equipment to be tested: ESP Filter (Use 10 nos ESP Cells)
Test Location: Shanghai
Room Temperature: 25.7°C
Room Relative Humidity: 62.4%

Testing Date: 14 MAY 2023
Testing Time: 09:53
Ref: FAT-ESP-RET-01

A. Test instruments

No.	Instruments	Serial No. / Model No.	CAL. CERT. NO. ~~Vaildity of Certificate~~
1	AMS station	9223A220600001	20231210-10-4564186001
2	AMS station	9223A220600002	20231210-10-4564186002
3	Aerosol generator	AG1800	N.A.
4	Air velocity test equipment	224819000112A3	KSZS23042355D051
		~~224819000110 1F~~	~~KSZS23042355D052~~
		~~224819000167F2~~	~~KSZS23042355D053~~
5	Differential pressure sensor	51565026/0322	C220711006BYW-03
6	Environmental sensor	U2651216	KSZS23042355D044
7	~~Ventilation Fan~~	~~EDK8.0B~~	~~N.A.~~
8	~~Ventilation Fan~~	~~EDK8.0B~~	~~N.A.~~

Remark: Valid calibration certificate will be submitted before testing

B. Visual Checking

	Items	Status
1	The installed equipment is complied with the approved submission, drawings, specification requirement	Y/N
2	No visible damage to impair safety	Y/N
3	Security of all meachanical/power connections, ensure all fixing is secured before testing.	Y/N

C. Commissioning Tests

Item	Testing Conditions: Temperature (°C)	Relative Humidity (%)	ESP Air Velocity (m/s)	Ionizer Voltage (kV)	Collector voltage (kV)	PM10 Inlet Concentration (mg/m3) *Note1	PM2.5 Inlet Concentration (mg/m3)	PM1 Inlet Concentration (mg/m3)	Measured Conditions: Temperature (°C)	Relative Humidity (%)	ESP Air Velocity (m/s)	Ionizer voltage (kV)	Collector voltage (kV)	PM10 Inlet Concentration (mg/m3)	PM2.5 Inlet Concentration (mg/m3)	PM1 Inlet Concentration (mg/m3)	Measured Test Result (Record per 1 mins): PM10 Outlet Concentration (mg/m3)	PM2.5 Outlet Concentration (mg/m3)	PM1 Outlet Concentration (mg/m3)	PM10 Removal rate (%)	Pass/Fail
1	50 ± 2	95 ± 5	5.37 + 0.5	14 ± 0.2	6.5 ± 0.2	<0.5	-	-	52.0	90.6	5.6	14	6.5	0.2156	–	–	0.0126	–	–	94.2	PASS
														0.2907	–	–	0.0144	–	–	95.0	
														0.2482	–	–	0.0170	–	–	93.2	
2	50 ± 2	95 ± 5	5.37 + 0.5	14 ± 0.2	6.5 ± 0.2	<0.5	<0.5	-	51.9	90.7	5.6	14	6.5	0.2350	0.2124	–	0.0144	0.0133	–	93.9	PASS
														0.3035	0.2653	–	0.0172	0.0143	–	94.3	
														0.2785	0.2456	–	0.0154	0.0142	–	94.5	
3	50 ± 2	95 ± 5	5.37 + 0.5	14 ± 0.2	6.5 ± 0.2	<0.5	<0.5	<0.5	51.9	90.7	5.6	14	6.5	0.2735	0.2020	0.2389	0.0164	0.0135	0.0121	94.0	PASS
														0.2759	0.2437	0.2218	0.0140	0.0124	0.0114	94.9	
														0.2211	0.1946	0.1751	0.0157	0.0137	0.0126	92.9	
4	50 ± 2	95 ± 5	5.37 + 0.5	14 ± 0.2	6.5 ± 0.2	≥0.5	-	-	51.7	91.0	5.6	14	6.5	0.7276	–	–	0.0302	–	–	95.9	PASS
														0.7680	–	–	0.0306	–	–	96.0	
														0.8724	–	–	0.0330	–	–	96.2	
5	50 ± 2	95 ± 5	5.37 + 0.5	14 ± 0.2	6.5 ± 0.2	≥0.5	≥0.5	-	51.8	91.2	5.5	14	6.5	0.6291	0.5750	–	0.0318	0.0317	–	94.9	PASS
														0.7380	0.6884	–	0.0276	0.0272	–	96.3	
														0.8595	0.8185	–	0.0263	0.0275	–	96.9	
6	50 ± 2	95 ± 5	5.37 + 0.5	14 ± 0.2	6.5 ± 0.2	≥0.5	≥0.5	≥0.5	51.6	91.2	5.7	14	6.5	0.7822	0.6590	0.6360	0.0274	0.0305	0.0277	96.5	PASS
														0.6450	0.6261	0.5722	0.0302	0.0279	0.0249	95.7	
														0.7678	0.7005	0.5129	0.0302	0.0296	0.0250	96.1	

Test Passing Criteria:
Inlet concentration equal to or greater than 0.5 mg/m3, not less than 80% of PM10 shall be removed after the air is treated by the APS.
Inlet concentration lower than 0.5 mg/m3, ~~not less than 80%~~, the outlet concentration shall not be greater than 0.1 mg/m3

Note 1: If <0.5mg/m3 inlet PM10 concentration, the range start at value 0.2-0.4mg/m3
If ≥ 0.5mg/m3 inlet PM10 concentration, the range start at value 0.6-0.9mg/m3
Measurement results from proposed AMS is based on ~~1 minute rolling averaging~~ 20 SEC. AVERAGING. The sensors recorded 20 sec average data to the PLC followed by PLC calculated 1-minute rolling averaging data

D. Remark

Test Conducted by:	Witnessed by:	Witnessed by:	Witnessed by:	Witness by:	Witnessed by:	Witnessed by:
PM	PM	PBSE			Harvey CHU	
LAI LEONG TAI	LEUNG TIK HANG, SAMSON	Cheung Sze Lok, Crystal	Eric Cheng (RE)	Anakin Ho (EMSD)	(EME/MW)	
Name (CTA)	Name (JEC)	Name (GCL)	Name (AMMJV)	Name (EMSD)	Name (HyD)	Name (IC / RPE)
Signature:	Signature:	Signature:	Signature:	Signature:	Signature:	Signature:
14 MAY 2023	14/5/2023	14/5/2023	14/5/2023	14/5/2023	14/5/2023	14/5/2023
Date:	Date:	Date:	Date:	Date:	Date:	Date:

14.5.23

CTA INTERNATIONAL AS CLEAN TUNNEL AIR

FAT Test Report for De-NO2 Adsorption Test (section 4.2.3.1)

Project: HY/2019/13 Central Kowloon Route Buildings
Equipment to be tested: De-NO2 Filter (Use 1 no Carbon Box)
Test Location: Suzhou
Room Temperature: 28.7°C
Room Relative Humidity: 45.2%

Testing Date: 15 MAY 2023
Testing Time: 10:27
Ref: FAT-DENO2-AT-01

MODEL NO. GP-200-C7H8 MODEL NO. GP-200-C7H8

A. Test instruments

No.	Instruments	Serial No. / Model No.	CAL. CERT. NO. ~~Vaildity of Certificate~~
1	~~NO2 Gas Bottle~~	~~129232032295~~	~~N.A.~~
2	~~Toluene Gas Bottle~~	——	~~N.A.~~
3	~~O3 Generator~~	——	~~N.A.~~
4	Toluene sensor	20230426031 / ~~SGA-700D-NO~~	KSZS23042355D054
		20230426032 / ~~SGA-700D-NO2-C~~	KSZS23042355D055
5	O3 Sensor	#982 / 106-L	KSZS23042355D038
6	~~O3 Sensor~~	~~#2717L~~	~~KSZS23042355D047~~
7	Air velocity test equipment	~~1101215~~ 1101219 / 0872-01	~~KSZS23042355D017~~ KSZS23042355D016
8	~~Ventilation Fan~~	——	——
9	NO2 Sensor	23030316001/~~SGA-700D-NO2-C~~	KSZS23042355D004
10	NO2 Sensor	23030316002/~~SGA-700D-NO2-C~~	KSZS23042355D005

Remark: Valid calibration certificate will be submitted before testing

B. Visual Checking

	Items	Status
1	The installed equipment is complied with the approved submission, drawings, specification requirement	(Y)N
2	No visible damage to impair safety	(Y)N
3	Security of all meachanical/power connections, ensure all fixing is secured before testing.	(Y)N

C. Commissioning Tests

Item	Testing Conditions: Temperature (℃)	Relative Humidity (%)	Face Velocity (m/s)	NO2 Inlet Concentration (ppm) *Note1	O3 Inlet Concentration (ppm)	Toluene Inlet Concentration (ppm)	Measured Conditions: Temperature (℃)	Relative Humidity (%)	Face Velocity (m/s)	NO2 Inlet Concentration (ppm)	O3 Inlet Concentration (ppm)	Toluene Inlet Concentration (ppm)	Measured Test Result, Record per 1 mins: NO2 Outlet Concentration (ppm)	NO2 Adsorption Rate (%)	Pass/Fail
1	50 ± 2	95 ± 5	0.5 + 0.05	<0.25	-	-	51.14	91.94	0.53	0.194	-	-	0.003	98.45	PASS
										0.180	-	-	0.003	98.33	
										0.177	-	-	0.002	98.87	
2	50 ± 2	95 ± 5	0.5 + 0.05	≥0.25	-	-	50.30	93.99	0.53	0.457	-	-	0.003	99.34	PASS
										0.450	-	-	0.003	99.33	
										0.425	-	-	0.002	99.52	
3	50 ± 2	95 ± 5	0.5 + 0.05	≥0.25	0.5 ± 5%	-	50.37	93.63	0.53	0.365	0.476	-	0.002	99.45	PASS
										0.342	0.508	-	0.002	99.41	
										0.324	0.481	-	0.002	99.38	
4	50 ± 2	95 ± 5	0.5 + 0.05	≥0.25 <1	-	10 ± 5%	50.38	93.63	0.53	0.333	-	11.44	0.004	98.79	PASS
										0.318	-	11.52	0.002	99.37	
										0.300	-	11.21	0.002	99.33	

Test Passing Criteria:
NO2 inlet concentration equal to or greater than 0.25ppm, not less than 80% of NO2 shall be removed.
NO2 inlet concentration lower than0.25ppm, the outlet concentration shall not be greater than 0.05ppm.

Note 1: If <0.25ppm inlet NO2 concentration, the range start at value 0.05-0.2ppm
If ≥0.25ppm inlet NO2 concentration, the range start at value 0.3-0.6ppm
~~Measurement results from proposed AMS is based on 1 minute rolling averaging.~~

D. Remark

Test Conducted by:	Witnessed by:	Witnessed by:	Witnessed by:	Witnessed by:	Witnessed by:	Witnessed by:
PM LAI LEONG FAI	PM LEUNG TIK HANG, SAMSON	PBSE Cheung Sze Lok, Crystal	Ben Mei	Eric Chang (RE)	Anakin Ho (EMSD)	Harvey CHU (EME/MW)
Name (CTA)	Name (JEC)	Name (GCL)	Name (IC / RPE)	Name (AMMJV)	Name (EMSD)	Name (HyD)
Signature:	Signature:	Signature:	Signature:	Signature:	Signature:	Signature:
15 MAY 2023	15/5/2023	15/5/2023	15/5/2023	15/5/2023	15/5/2023	15/5/2023
Date:	Date:	Date:	Date:	Date:	Date:	Date:

PRETCKR.

FAT Test Report for Intergration Test of ESP & De-NO2 Filters (section 4.3.3)

Project:	HV/2019/13 Central Kowloon Route Buildings
Equipment to be tested:	ESP Filter (Use 10nos ESP Cells) & De-NO2 Filter (Use 55nos Carbon Boxes)
Test Location:	Shanghai
Room Temperature:	22.3 °C
Room Relative Humidity:	54.1 %

TEST INSTRUMENTS	SERIAL NO	CERT. NO.
1. AMS STATION	9223A22060001 / MAS-AF 300	2023120-10-4564186002
2. AMS STATION	9223A22060002 / MAS-AF 300	2023120-10-4564186001
3. ENVIROMENTAL SENSOR	U2651216	KSZS23042355D044
4. VELOCITY SENSOR	22481900112A3	KSZS23042355D051

Testing Date: 12 MAY 2023
Testing Time: 09:37
Ref: FAT-INTEGRATION-01

A. Commissioning Tests

Item	Test Conditions: Temperature (°C)	Relative Humidity (%)	ESP Air Velocity (m/s)	Ionizer Voltange (kV)	Collector Voltange (kV)	PM10 Inlet Concentration (mg/m3) *Note1	NO2 Inlet Concentration (ppm) *Note2	Measured Test Conditions: Temperature (°C)	Relative Humidity (%)	ESP Air Velocity (m/s)	Ionizer Voltange (kV)	Collector Voltange (kV)	PM10 Inlet Concentration (mg/m3)	PM2.5 Inlet Concentration (mg/m3)	PM1 Inlet Concentration (mg/m3)	NO2 Inlet Concentration (ppm)	Measured Test Result (Record per ~~3 mins~~ 1 min): PM10 Outlet Concentration (mg/m3)	PM10 Removal rate (%)	NO2 Outlet Concentration (ppm)	NO2 Adsorption Rate (%)	Pass/Fail
1	50 ± 2	40 ± 5	5.37 + 0.5	13 ± 0.2	6 ± 0.2	<0.5	<0.25	50	40.6	5.4	13	6	0.3234	0.3109	0.2224	0.0516	0.0107	96.7	0.0010	98.1	PASS
													0.3489	0.3082	0.2389	0.0506	0.0136	96.1	0.0010	98.0	
													0.3582	0.3020	0.2771	0.0493	0.0124	96.5	0.0010	98.0	
2	50 ± 2	40 ± 5	5.37 + 0.5	14 ± 0.2	6.5 ± 0.2	<0.5	<0.25	50	40.3	5.6	14	6.5	0.3126	0.2681	0.3027	0.0524	0.0141	95.5	0.0010	98.1	PASS
													0.3126	0.2681	0.2455	0.0523	0.0141	95.9	0.0010	98.1	
													0.3057	0.2724	0.2445	0.0508	0.0148	95.2	0.0010	98.6	
3	50 ± 2	40 ± 5	5.37 + 0.5	13 ± 0.2	6 ± 0.2	≥0.5	≥0.25	50	40.4	5.8	13	6	0.7661	0.7546	0.8626	0.3689	0.0270	96.5	0.0093	97.5	PASS
													0.8739	0.7901	0.7004	0.4020	0.0370	95.8	0.0211	94.8	
													0.8500	0.7885	0.6893	0.3700	0.0391	95.4	0.0176	95.2	
4	50 ± 2	40 ± 5	5.37 + 0.5	14 ± 0.2	6.5 ± 0.2	≥0.5	≥0.25	50	40.6	5.6	14	6.5	0.7449	0.6276	0.5665	0.5154	0.0290	96.1	0.0151	95.2	PASS
													0.7669	0.6257	0.6169	0.5140	0.0261	96.6	0.0151	95.0	
													0.7930	0.7439	0.6725	0.3111	0.0277	96.5	0.0165	94.7	
5	50 ± 2	95 ± 5	5.37 + 0.5	13 ± 0.2	6 ± 0.2	<0.5	<0.25	51.6	91.2	5.8	13	6	0.3051	0.2472	0.2202	0.0582	0.0084	97.2	0.0010	98.3	PASS
													0.3051	0.2311	0.2057	0.0583	0.0117	95.7	0.0010	98.3	
													0.3015	0.2807	0.2554	0.0600	0.0120	96	0.0010	98.3	
6	50 ± 2	95 ± 5	5.37 + 0.5	14 ± 0.2	6.5 ± 0.2	<0.5	<0.25	51.7	91.3	5.7	14	6.5	0.2551	0.2105	0.1902	0.0599	0.0104	95.9	0.0010	98.3	PASS
													0.2339	0.2017	0.1803	0.0598	0.0113	95.2	0.0010	98.3	
													0.2933	0.2448	0.2231	0.0603	~~0.0122~~ 0.0113	96.1	0.0010	98.3	
7	50 ± 2	95 ± 5	5.37 + 0.5	13 ± 0.2	6 ± 0.2	≥0.5	≥0.25	51.6	91.5	5.6	13	6	0.7552	0.6779	0.6180	0.4485	0.0222	97.1	0.0486	90.7	PASS
													0.7883	0.6848	0.6281	0.4466	0.0178	97.7	0.0419	90.6	
													0.6354	0.5623	0.4962	0.4385	0.0195	96.9	0.0420	90.4	
8	50 ± 2	95 ± 5	5.37 + 0.5	14 ± 0.2	6.5 ± 0.2	≥0.5	≥0.25	51.5	91.4	5.7	14	6.5	0.8148	0.7839	0.7171	0.4750	0.0158	98.2	0.0450	90.5	PASS
													0.7257	0.6069	0.5368	0.4691	0.0150	97.9	0.0454	90.3	
													0.7311	0.6586	0.5875	0.4691	0.0161	97.8	0.0441	90.6	

Test Passing Criteria:
Inlet concentration equal to or greater than 0.5 mg/m3, not less than 80% of PM10 shall be removed after the air is treated by the APS.
Inlet concentration lower than 0.5 mg/m3, not less than 80%, the outlet concentration shall not be greater than 0.1 mg/m3

Note 1: If <0.5mg/m3 inlet PM10 concentration, the range start at value 0.2~0.4mg/m3
If ≥ 0.5mg/m3 inlet PM10 concentration, the range start at value 0.6~0.9mg/m3

Note 2: If <0.25ppm inlet NO2 concentration, the range start at value 0.05~0.2ppm
If ≥ 0.25ppm inlet NO2 concentration, the range start at value 0.3~0.6ppm
Measurement results from proposed AMS ~~is based on 1 minute rolling averaging~~ and removing efficiency are based on 20 sec. averaging. The sensor recorded 20 sec average date to the PLC followed by PLC calculated 1-minute rolling averaging data. [illegible]

B. Remark

TEST PASSING CRITERIA: (REFER TO P3 3702 C1)
(i) FOR PARTICLE, WHEN INLET CONCENTRATION EQUAL TO OR GREATER THAN 0.5 mg/m³, NOT LESS THAN 80% OF PM10 SHALL BE REMOVED AFTER THE AIR IS TREATED BY THE APS. FOR INLET CONCENTRATION LOWER THAN 0.5 mg/m³, THE OUTLET CONCENTRATION SHALL NOT BE GREATER THAN 0.1 mg/m³.
(ii) FOR NO_2, WHEN INLET CONCENTRATION EQUAL TO OR GREATER THAN 0.25 ppm, NOT LESS THAN 80% OF NO_2 SHALL BE REMOVED AFTER THE AIR IS TREATED BY THE APS. FOR INLET CONCENTRATION LESS THAN 0.25 ppm, THE OUTLET CONCENTRATION SHALL NOT BE GREATER THAN 0.05 ppm.

Test Conducted by:	Witnessed by:	Witnessed by:	Witnessed by:	Witnessed by:	Witness by:	Witnessed by:
PM	PM	PBSE				
LAI LEONG TAI	CHEUNG TIK HANG, SAMSON	Cheung Sze Lok, Crystal	Ben Mei	Eric Chan (RE)	Andrew Ho (ETS)	Harvey CHU CEME (HVW)
Name (CTA)	Name (IEC)	Name (ECL)	Name (IC / RPE)	Name (AMMNG)	Name (EMSD)	Name (HVD)
Signature:	Signature:	Signature:	Signature:	Signature:	Signature:	Signature:
12 MAY 2023	12/5/2023	12/5/2023	12/5/2023	12/5/2023	12/5/2023	12/5/2023
Date:	Date:	Date:	Date:	Date:	Date:	Date:

Appendix B – Material Test Report of the denitrification media (activated carbon) by an accredited independent laboratory

检 测 报 告

报告编号：2024F-HT0153

检 测 类 别： 来样检测

委 托 单 位： 隧道空气净化国际有限公司

签 发 日 期： 2024 年 8 月 6 日

煤炭科学技术研究院有限公司

煤炭科学技术研究院有限公司检测中心

（煤炭工业节能监测中心）

注 意 事 项

1．报告无“检验检测专用章”无效。

2．检测报告不得局部复制，复制报告未重新加盖“检验检测专用章”无效。

3．报告无审核、批准人签章无效。

4．报告涂改无效。

5．对检测报告若有异议，应于签发之日起十五日内提出，逾期不予受理。

6．报告仅对本次来样的检测结果负责。

机构本部地址：北京市朝阳区和平街青年沟路 5 号

实验室地址：北京市大兴区采育镇北京采育经济开发区育隆大街 5 号

电话：010-80201200，010-80201360，010-84263572

煤炭科学技术研究院有限公司
煤炭科学技术研究院有限公司检测中心
Test Center of China Coal Research Institute
（煤炭工业节能监测中心）
（Coal Industry Energy Conservation Monitoring Center）
检测报告
Analysis Report

实验室编号	HW24070053	样品标识	CTA TA5 产品批号：306881-1
委托单位	隧道空气净化国际有限公司	委托单位地址	/
委托人	齐正革	委托人电话	17701757993
样品来源	委托人寄送	样品数量	1 件
样品状态	黑色柱状	样品接收日期	2024 年 7 月 16 日
检测日期	2024 年 7 月 16 日~2024 年 7 月 23 日	报告编制日期	2024 年 7 月 23 日
检测项目	水分 灰分 四氯化碳吸附率 比表面积 粒度 强度 着火点 表观密度	检测依据	ASTM D 2867-2023 ASTM D 2866-11(2018) ASTM D 3467-04(2020) GB/T 7702.20-2008 ASTM D 2862-16(2022) ASTM D 3802-23 ASTM D 3466-06(2018) ASTM D 2854-2009(2019)
检测结果	见本报告后续页 （检验检测专用章） 签发日期 2024 年 8 月 6 日		
备注	水分（ASTM）、灰分（ASTM）、四氯化碳吸附率（ASTM）、强度（ASTM）、粒度（ASTM）、着火点（ASTM）、表观密度（ASTM）不在 CMA/CNAS 附表范围内，本报告仅作为内部质量控制、科研、教学之用。		

编　　制 Reported by　　审　　核 Checked by　　批　　准 Approved by

煤炭科学技术研究院有限公司
煤炭科学技术研究院有限公司检测中心
Test Center of China Coal Research Institute
（煤炭工业节能监测中心）
（Coal Industry Energy Conservation Monitoring Center）
检测报告
Analysis Report
（本报告只适用于来样的检测结果）
（The data sheet is only responsible for the test results of received sample）

实验室编号 Number：HW24070053

样品标识 Identification：CTA TA5 产品批号：306881-1

检测项目		单位	检测结果	委托单位指定判定依据
水分		%	**1.07**	≤5
灰分		%	**9.67**	≤14
四氯化碳吸附率		%	**62.28**	≥60
比表面积		m^2/g	**1009**	—
强度		%	**99**	≥90
着火点		° C	**518**	—
表观密度		g/mL	**0.483**	—
粒度	≤3.35mm(6 目)	%	**0.61**	≤5
以下空白				

编　　制 Reported by 吴倩　　审　　核 Checked by 陈平　　批　　准 Approved by 赵奇

检 测 报 告

报告编号：2024F-HT0154

检测类别：来样检测

委托单位：隧道空气净化国际有限公司

签发日期：2024 年 8 月 6 日

煤炭科学技术研究院有限公司

煤炭科学技术研究院有限公司检测中心

（煤炭工业节能监测中心）

注 意 事 项

1．报告无“检验检测专用章”无效。

2．检测报告不得局部复制，复制报告未重新加盖“检验检测专用章”无效。

3．报告无审核、批准人签章无效。

4．报告涂改无效。

5．对检测报告若有异议，应于签发之日起十五日内提出，逾期不予受理。

6．报告仅对本次来样的检测结果负责。

机构本部地址：北京市朝阳区和平街青年沟路 5 号

实验室地址：北京市大兴区采育镇北京采育经济开发区育隆大街 5 号

电话：010-80201200，010-80201360，010-84263572

煤炭科学技术研究院有限公司
煤炭科学技术研究院有限公司检测中心
Test Center of China Coal Research Institute
（煤炭工业节能监测中心）
（Coal Industry Energy Conservation Monitoring Center）
检测报告
Analysis Report

实验室编号	HW24070054	样品标识	CTA TA5 产品批号：306881-2
委托单位	隧道空气净化国际有限公司	委托单位地址	/
委托人	齐正革	委托人电话	17701757993
样品来源	委托人寄送	样品数量	1 件
样品状态	黑色柱状	样品接收日期	2024 年 7 月 16 日
检测日期	2024 年 7 月 16 日~2024 年 7 月 23 日	报告编制日期	2024 年 7 月 23 日
检测项目	水分 灰分 四氯化碳吸附率 比表面积 粒度 强度 着火点 表观密度	检测依据	ASTM D 2867-2023 ASTM D 2866-11(2018) ASTM D 3467-04(2020) GB/T 7702.20-2008 ASTM D 2862-16(2022) ASTM D 3802-23 ASTM D 3466-06(2018) ASTM D 2854-2009(2019)
检测结果	见本报告后续页 （检验检测专用章） 签发日期　2024 年 8 月 6 日		
备注	水分（ASTM）、灰分（ASTM）、四氯化碳吸附率（ASTM）、强度（ASTM）、粒度（ASTM）、着火点（ASTM）、表观密度（ASTM）不在 CMA/CNAS 附表范围内，本报告仅作为内部质量控制、科研、教学之用。		

编　　制 Reported by　　审　　核 Checked by　　批　　准 Approved by

煤炭科学技术研究院有限公司
煤炭科学技术研究院有限公司检测中心
Test Center of China Coal Research Institute
（煤炭工业节能监测中心）
（Coal Industry Energy Conservation Monitoring Center）
检测报告
Analysis Report
（本报告只适用于来样的检测结果）
（The data sheet is only responsible for the test results of received sample）

实验室编号 Number：HW24070054

样品标识 Identification：CTA TA5 产品批号：306881-2

检测项目		单位	检测结果	委托单位指定判定依据
水分		%	**0.93**	≤5
灰分		%	**9.72**	≤14
四氯化碳吸附率		%	**60.67**	≥60
比表面积		m^2/g	**1011**	—
强度		%	**99**	≥90
着火点		° C	**516**	—
表观密度		g/mL	**0.484**	—
粒度	≤3.35mm(6 目)	%	**0.70**	≤5
以下空白				

编　　制 Reported by 吴倩　　审　　核 Checked by 冷烨　　批　　准 Approved by 赵奇

检 测 报 告

报告编号：2024F-HT0083

检测类别：来样检测

委托单位：隧道空气净化国际有限公司

签发日期：2024 年 5 月 17 日

煤炭科学技术研究院有限公司

煤炭科学技术研究院有限公司检测中心

（煤炭工业节能监测中心）

注　意　事　项

1．报告无“检验检测专用章”无效。

2．检测报告不得局部复制，复制报告未重新加盖“检验检测专用章”无效。

3．报告无审核、批准人签章无效。

4．报告涂改无效。

5．对检测报告若有异议，应于签发之日起十五日内提出，逾期不予受理。

6．报告仅对本次来样的检测结果负责。

机构本部地址：北京市朝阳区和平街青年沟路 5 号

实验室地址：北京市大兴区采育镇北京采育经济开发区育隆大街 5 号

电话：010-80201200，010-80201360，010-84263572

煤炭科学技术研究院有限公司
煤炭科学技术研究院有限公司检测中心
Test Center of China Coal Research Institute
（煤炭工业节能监测中心）
（Coal Industry Energy Conservation Monitoring Center）
检测报告
Analysis Report

实验室编号	HW24050007	样品标识	CTA TA5 产品批号：306881-3
委托单位	隧道空气净化国际有限公司	委托单位地址	/
委托人	齐正革	委托人电话	17701757993
样品来源	委托人寄送	样品数量	1 件
样品状态	黑色柱状	样品接收日期	2024 年 5 月 6 日
检测日期	2024 年 5 月 6 日~2024 年 5 月 15 日	报告编制日期	2024 年 5 月 16 日
检测项目	水分 灰分 四氯化碳吸附率 比表面积 粒度 强度 着火点 表观密度	检测依据	ASTM D 2867-2023 ASTM D 2866-11(2018) ASTM D 3467-04(2020) GB/T 7702.20-2008 ASTM D 2862-16(2022) ASTM D 3802-23 ASTM D 3466-06(2018) ASTM D 2854-2009(2019)
检测结果	见本报告后续页 （检验检测专用章） 签发日期 2024 年 5 月 17 日		
备注	水分（ASTM）、灰分（ASTM）、四氯化碳吸附率（ASTM）、强度（ASTM）、粒度（ASTM）、着火点（ASTM）、表观密度（ASTM）不在 CMA/CNAS 附表范围内，本报告仅作为内部质量控制、科研、教学之用。		

编　　制 Reported by　　审　　核 Checked by　　批　　准 Approved by

煤炭科学技术研究院有限公司
煤炭科学技术研究院有限公司检测中心

Test Center of China Coal Research Institute

（煤炭工业节能监测中心）

（Coal Industry Energy Conservation Monitoring Center）

检测报告

Analysis Report

（本报告只适用于来样的检测结果）

（The data sheet is only responsible for the test results of received sample）

实验室编号 Number：HW24050007

样品标识 Identification：CTA TA5 产品批号：306881-3

检测项目		单位	检测结果	客户指定判定依据
水分		%	**0.55**	≤5
灰分		%	**9.48**	≤14
四氯化碳吸附率		%	**62.75**	≥60
比表面积		m^2/g	**1023**	—
强度		%	**99**	≥90
着火点		° C	**503**	—
表观密度		g/mL	**0.485**	—
粒度	≤3.35mm(6 目)	%	**0.58**	≤5
以下空白				

编　　制 Reported by 梁倩　　审　　核 Checked by 淳平　　批　　准 Approved by 赵奇

检 测 报 告

报告编号：2024F-HT0084

检 测 类 别： 来样检测

委 托 单 位： 隧道空气净化国际有限公司

签 发 日 期： 2024 年 5 月 17 日

煤炭科学技术研究院有限公司

煤炭科学技术研究院有限公司检测中心

（煤炭工业节能监测中心）

注 意 事 项

1．报告无“检验检测专用章”无效。

2．检测报告不得局部复制，复制报告未重新加盖“检验检测专用章”无效。

3．报告无审核、批准人签章无效。

4．报告涂改无效。

5．对检测报告若有异议，应于签发之日起十五日内提出，逾期不予受理。

6．报告仅对本次来样的检测结果负责。

机构本部地址：北京市朝阳区和平街青年沟路 5 号

实验室地址：北京市大兴区采育镇北京采育经济开发区育隆大街 5 号

电话：010-80201200，010-80201360，010-84263572

煤炭科学技术研究院有限公司
煤炭科学技术研究院有限公司检测中心

Test Center of China Coal Research Institute

（煤炭工业节能监测中心）

（Coal Industry Energy Conservation Monitoring Center）

检测报告

Analysis Report

实验室编号	HW24050008	样品标识	CTA TA5 产品批号：306881-4
委托单位	隧道空气净化国际有限公司	委托单位地址	/
委托人	齐正革	委托人电话	17701757993
样品来源	委托人寄送	样品数量	1 件
样品状态	黑色柱状	样品接收日期	2024 年 5 月 6 日
检测日期	2024 年 5 月 6 日~2024 年 5 月 16 日	报告编制日期	2024 年 5 月 16 日
检测项目	水分 灰分 四氯化碳吸附率 比表面积 粒度 强度 着火点 表观密度	检测依据	ASTM D 2867-2023 ASTM D 2866-11(2018) ASTM D 3467-04(2020) GB/T 7702.20-2008 ASTM D 2862-16(2022) ASTM D 3802-23 ASTM D 3466-06(2018) ASTM D 2854-2009(2019)
检测结果	见本报告后续页 （检验检测专用章） 签发日期 2024 年 5 月 17 日		
备注	水分（ASTM）、灰分（ASTM）、四氯化碳吸附率（ASTM）、强度（ASTM）、粒度（ASTM）、着火点（ASTM）、表观密度（ASTM）不在 CMA/CNAS 附表范围内，本报告仅作为内部质量控制、科研、教学之用。		

编　　制 Reported by　　审　　核 Checked by　　批　　准 Approved by

煤炭科学技术研究院有限公司
煤炭科学技术研究院有限公司检测中心

Test Center of China Coal Research Institute

（煤炭工业节能监测中心）

（Coal Industry Energy Conservation Monitoring Center）

检测报告

Analysis Report

（本报告只适用于来样的检测结果）

（The data sheet is only responsible for the test results of received sample）

实验室编号 Number：HW24050008

样品标识 Identification：CTA TA5 产品批号：306881-4

检测项目		单位	检测结果	客户指定判定依据
水分		%	**0.39**	**≤5**
灰分		%	**9.37**	**≤14**
四氯化碳吸附率		%	**62.24**	**≥60**
比表面积		m^2/g	**1017**	—
强度		%	**99**	**≥90**
着火点		° C	**513**	—
表观密度		g/mL	**0.497**	—
粒度	≤3.35mm(6 目)	%	**0.44**	**≤5**
以下空白				

编　　制 Reported by 吴倩　　审　　核 Checked by 淳平　　批　　准 Approved by 赵奇

检 测 报 告

报告编号：2024F-HT0088

检 测 类 别： 来样检测

委 托 单 位： 隧道空气净化国际有限公司

签 发 日 期： 2024 年 5 月 29 日

煤炭科学技术研究院有限公司

煤炭科学技术研究院有限公司检测中心

（煤炭工业节能监测中心）

注　意　事　项

1．报告无“检验检测专用章”无效。

2．检测报告不得局部复制，复制报告未重新加盖“检验检测专用章”无效。

3．报告无审核、批准人签章无效。

4．报告涂改无效。

5．对检测报告若有异议，应于签发之日起十五日内提出，逾期不予受理。

6．报告仅对本次来样的检测结果负责。

机构本部地址：北京市朝阳区和平街青年沟路 5 号

实验室地址：北京市大兴区采育镇北京采育经济开发区育隆大街 5 号

电话：010-80201200，010-80201360，010-84263572

煤炭科学技术研究院有限公司
煤炭科学技术研究院有限公司检测中心
Test Center of China Coal Research Institute
（煤炭工业节能监测中心）
（Coal Industry Energy Conservation Monitoring Center）
检测报告
Analysis Report

实验室编号	HW24050073	样品标识	CTA TA5 产品批号：306881-5
委托单位	隧道空气净化国际有限公司	委托单位地址	/
委托人	齐正革	委托人电话	17701757993
样品来源	委托人寄送	样品数量	1 件
样品状态	黑色柱状	样品接收日期	2024 年 5 月 16 日
检测日期	2024 年 5 月 16 日~2024 年 5 月 27 日	报告编制日期	2024 年 5 月 28 日
检测项目	水分 灰分 四氯化碳吸附率 比表面积 粒度 强度 着火点 表观密度	检测依据	ASTM D 2867-2023 ASTM D 2866-11(2018) ASTM D 3467-04(2020) GB/T 7702.20-2008 ASTM D 2862-16(2022) ASTM D 3802-23 ASTM D 3466-06(2018) ASTM D 2854-2009(2019)
检测结果	见本报告后续页 （检验检测专用章） 签发日期 2024 年 5 月 29 日		
备注	水分（ASTM）、灰分（ASTM）、四氯化碳吸附率（ASTM）、强度（ASTM）、粒度（ASTM）、着火点（ASTM）、表观密度（ASTM）不在 CMA/CNAS 附表范围内，本报告仅作为内部质量控制、科研、教学之用。		

编　　制 Reported by 吴倩　　审　　核 Checked by 梁兴　　批　　准 Approved by 赵奇

煤炭科学技术研究院有限公司
煤炭科学技术研究院有限公司检测中心
Test Center of China Coal Research Institute
（煤炭工业节能监测中心）
（Coal Industry Energy Conservation Monitoring Center）
检测报告
Analysis Report
（本报告只适用于来样的检测结果）
（The data sheet is only responsible for the test results of received sample）

实验室编号 Number：HW24050073

样品标识 Identification：CTA TA5 产品批号：306881-5

检测项目		单位	检测结果	客户指定判定依据
水分		%	**0.76**	≤5
灰分		%	**9.30**	≤14
四氯化碳吸附率		%	**63.34**	≥60
比表面积		m^2/g	**1008**	—
强度		%	**98**	≥90
着火点		° C	**511**	—
表观密度		g/mL	**0.478**	—
粒度	≤3.35mm(6目)	%	**0.89**	≤5
以下空白				

编　　制 Reported by　　审　　核 Checked by　　批　　准 Approved by

检 测 报 告

报告编号：2024F-HT0089

检 测 类 别： 来样检测

委 托 单 位： 隧道空气净化国际有限公司

签 发 日 期： 2024 年 5 月 29 日

煤炭科学技术研究院有限公司

煤炭科学技术研究院有限公司检测中心

（煤炭工业节能监测中心）

注　意　事　项

1．报告无“检验检测专用章”无效。

2．检测报告不得局部复制，复制报告未重新加盖“检验检测专用章”无效。

3．报告无审核、批准人签章无效。

4．报告涂改无效。

5．对检测报告若有异议，应于签发之日起十五日内提出，逾期不予受理。

6．报告仅对本次来样的检测结果负责。

机构本部地址：北京市朝阳区和平街青年沟路 5 号

实验室地址：北京市大兴区采育镇北京采育经济开发区育隆大街 5 号

电话：010-80201200，010-80201360，010-84263572

煤炭科学技术研究院有限公司
煤炭科学技术研究院有限公司检测中心
Test Center of China Coal Research Institute
（煤炭工业节能监测中心）
（Coal Industry Energy Conservation Monitoring Center）
检测报告
Analysis Report

实验室编号	HW24050074	样品标识	CTA TA5 产品批号：306881-6
委托单位	隧道空气净化国际有限公司	委托单位地址	/
委托人	齐正革	委托人电话	17701757993
样品来源	委托人寄送	样品数量	1 件
样品状态	黑色柱状	样品接收日期	2024 年 5 月 16 日
检测日期	2024 年 5 月 16 日~2024 年 5 月 27 日	报告编制日期	2024 年 5 月 28 日
检测项目	水分 灰分 四氯化碳吸附率 比表面积 粒度 强度 着火点 表观密度	检测依据	ASTM D 2867-2023 ASTM D 2866-11(2018) ASTM D 3467-04(2020) GB/T 7702.20-2008 ASTM D 2862-16(2022) ASTM D 3802-23 ASTM D 3466-06(2018) ASTM D 2854-2009(2019)
检测结果	见本报告后续页 （检验检测专用章） 签发日期 2024 年 5 月 29 日		
备注	水分（ASTM）、灰分（ASTM）、四氯化碳吸附率（ASTM）、强度（ASTM）、粒度（ASTM）、着火点（ASTM）、表观密度（ASTM）不在 CMA/CNAS 附表范围内，本报告仅作为内部质量控制、科研、教学之用。		

编　　制 Reported by 吴倩　　审　　核 Checked by 李平　　批　　准 Approved by 赵奇

煤炭科学技术研究院有限公司
煤炭科学技术研究院有限公司检测中心
Test Center of China Coal Research Institute
（煤炭工业节能监测中心）
（Coal Industry Energy Conservation Monitoring Center）
检测报告
Analysis Report
（本报告只适用于来样的检测结果）
（The data sheet is only responsible for the test results of received sample）

实验室编号 Number：HW24050074

样品标识 Identification：CTA TA5 产品批号：306881-6

检测项目		单位	检测结果	客户指定判定依据
水分		%	**0.88**	≤5
灰分		%	**9.36**	≤14
四氯化碳吸附率		%	**62.31**	≥60
比表面积		m^2/g	**1011**	—
强度		%	**98**	≥90
着火点		° C	**509**	—
表观密度		g/mL	**0.477**	—
粒度	≤3.35mm(6目)	%	**0.67**	≤5
以下空白				

编　　制 Reported by　　审　　核 Checked by　　批　　准 Approved by

检 测 报 告

报告编号：2024F-HT0090

检 测 类 别： 来样检测

委 托 单 位： 隧道空气净化国际有限公司

签 发 日 期： 2024 年 5 月 29 日

煤炭科学技术研究院有限公司

煤炭科学技术研究院有限公司检测中心

（煤炭工业节能监测中心）

注　意　事　项

1．报告无“检验检测专用章”无效。

2．检测报告不得局部复制，复制报告未重新加盖“检验检测专用章”无效。

3．报告无审核、批准人签章无效。

4．报告涂改无效。

5．对检测报告若有异议，应于签发之日起十五日内提出，逾期不予受理。

6．报告仅对本次来样的检测结果负责。

机构本部地址：北京市朝阳区和平街青年沟路 5 号

实验室地址：北京市大兴区采育镇北京采育经济开发区育隆大街 5 号

电话：010-80201200，010-80201360，010-84263572

煤炭科学技术研究院有限公司
煤炭科学技术研究院有限公司检测中心
Test Center of China Coal Research Institute
（煤炭工业节能监测中心）
（Coal Industry Energy Conservation Monitoring Center）
检测报告
Analysis Report

实验室编号	HW24050075	样品标识	CTA TA5 产品批号：306881-7
委托单位	隧道空气净化国际有限公司	委托单位地址	/
委托人	齐正革	委托人电话	17701757993
样品来源	委托人寄送	样品数量	1 件
样品状态	黑色柱状	样品接收日期	2024 年 5 月 16 日
检测日期	2024 年 5 月 16 日~2024 年 5 月 28 日	报告编制日期	2024 年 5 月 28 日
检测项目	水分 灰分 四氯化碳吸附率 比表面积 粒度 强度 着火点 表观密度	检测依据	ASTM D 2867-2023 ASTM D 2866-11(2018) ASTM D 3467-04(2020) GB/T 7702.20-2008 ASTM D 2862-16(2022) ASTM D 3802-23 ASTM D 3466-06(2018) ASTM D 2854-2009(2019)
检测结果	见本报告后续页 （检验检测专用章） 签发日期　2024 年 5 月 29 日		
备注	水分（ASTM）、灰分（ASTM）、四氯化碳吸附率（ASTM）、强度（ASTM）、粒度（ASTM）、着火点（ASTM）、表观密度（ASTM）不在 CMA/CNAS 附表范围内，本报告仅作为内部质量控制、科研、教学之用。		

编　　制 Reported by　　审　　核 Checked by　　批　　准 Approved by

煤炭科学技术研究院有限公司
煤炭科学技术研究院有限公司检测中心
Test Center of China Coal Research Institute
（煤炭工业节能监测中心）
（Coal Industry Energy Conservation Monitoring Center）
检测报告
Analysis Report
（本报告只适用于来样的检测结果）
（The data sheet is only responsible for the test results of received sample）

实验室编号 Number：HW24050075

样品标识 Identification：CTA TA5 产品批号：306881-7

检测项目		单位	检测结果	客户指定判定依据
水分		%	**0.86**	≤5
灰分		%	**9.48**	≤14
四氯化碳吸附率		%	**61.21**	≥60
比表面积		m^2/g	**1010**	—
强度		%	**98**	≥90
着火点		° C	**518**	—
表观密度		g/mL	**0.477**	
粒度	≤3.35mm(6目)	%	**0.95**	≤5
以下空白				

编　　制 Reported by 张倩　　审　　核 Checked by 李平　　批　　准 Approved by 赵奇

检 测 报 告

报告编号：2024F-HT0100

检 测 类 别： 来样检测

委 托 单 位： 隧道空气净化国际有限公司

签 发 日 期： 2024 年 6 月 7 日

煤炭科学技术研究院有限公司

煤炭科学技术研究院有限公司检测中心

（煤炭工业节能监测中心）

注 意 事 项

1．报告无“检验检测专用章”无效。

2．检测报告不得局部复制，复制报告未重新加盖“检验检测专用章”无效。

3．报告无审核、批准人签章无效。

4．报告涂改无效。

5．对检测报告若有异议，应于签发之日起十五日内提出，逾期不予受理。

6．报告仅对本次来样的检测结果负责。

机构本部地址：北京市朝阳区和平街青年沟路 5 号

实验室地址：北京市大兴区采育镇北京采育经济开发区育隆大街 5 号

电话：010-80201200，010-80201360，010-84263572

煤炭科学技术研究院有限公司
煤炭科学技术研究院有限公司检测中心
Test Center of China Coal Research Institute
（煤炭工业节能监测中心）
（Coal Industry Energy Conservation Monitoring Center）
检测报告
Analysis Report

实验室编号	HW24050131	样品标识	CTA TA5 产品批号：306881-8
委托单位	隧道空气净化国际有限公司	委托单位地址	/
委托人	齐正革	委托人电话	17701757993
样品来源	委托人寄送	样品数量	1 件
样品状态	黑色柱状	样品接收日期	2024 年 5 月 24 日
检测日期	2024 年 5 月 24 日~2024 年 6 月 4 日	报告编制日期	2024 年 6 月 6 日
检测项目	水分 灰分 四氯化碳吸附率 比表面积 粒度 强度 着火点 表观密度	检测依据	ASTM D 2867-2023 ASTM D 2866-11(2018) ASTM D 3467-04(2020) GB/T 7702.20-2008 ASTM D 2862-16(2022) ASTM D 3802-23 ASTM D 3466-06(2018) ASTM D 2854-2009(2019)
检测结果	见本报告后续页 （检验检测专用章） 签发日期 2024 年 6 月 7 日		
备注	水分（ASTM）、灰分（ASTM）、四氯化碳吸附率（ASTM）、强度（ASTM）、粒度（ASTM）、着火点（ASTM）、表观密度（ASTM）不在 CMA/CNAS 附表范围内，本报告仅作为内部质量控制、科研、教学之用。		

编　　制 Reported by　　审　　核 Checked by　　批　　准 Approved by

煤炭科学技术研究院有限公司
煤炭科学技术研究院有限公司检测中心
Test Center of China Coal Research Institute
（煤炭工业节能监测中心）
（Coal Industry Energy Conservation Monitoring Center）
检测报告
Analysis Report
（本报告只适用于来样的检测结果）
（The data sheet is only responsible for the test results of received sample）

实验室编号 Number：HW24050131

样品标识 Identification：CTA TA5 产品批号：306881-8

检测项目		单位	检测结果	客户指定判定依据
水分		%	**0.48**	≤5
灰分		%	**9.69**	≤14
四氯化碳吸附率		%	**62.98**	≥60
比表面积		m^2/g	**1040**	—
强度		%	**98**	≥90
着火点		° C	**515**	—
表观密度		g/mL	**0.477**	
粒度	≤3.35mm(6目)	%	**0.95**	≤5
以下空白				

编　　制 Reported by 吴倩　　审　　核 Checked by 谭平　　批　　准 Approved by 赵奇

检 测 报 告

报告编号：2024F-HT0101

检 测 类 别： 来样检测

委 托 单 位： 隧道空气净化国际有限公司

签 发 日 期： 2024 年 6 月 7 日

煤炭科学技术研究院有限公司

煤炭科学技术研究院有限公司检测中心

（煤炭工业节能监测中心）

注 意 事 项

1．报告无“检验检测专用章”无效。

2．检测报告不得局部复制，复制报告未重新加盖“检验检测专用章”无效。

3．报告无审核、批准人签章无效。

4．报告涂改无效。

5．对检测报告若有异议，应于签发之日起十五日内提出，逾期不予受理。

6．报告仅对本次来样的检测结果负责。

机构本部地址：北京市朝阳区和平街青年沟路 5 号

实验室地址：北京市大兴区采育镇北京采育经济开发区育隆大街 5 号

电话：010-80201200，010-80201360，010-84263572

煤炭科学技术研究院有限公司
煤炭科学技术研究院有限公司检测中心
Test Center of China Coal Research Institute
（煤炭工业节能监测中心）
（Coal Industry Energy Conservation Monitoring Center）
检测报告
Analysis Report

实验室编号	HW24050132	样品标识	CTA TA5 产品批号：306881-9
委托单位	隧道空气净化国际有限公司	委托单位地址	/
委托人	齐正革	委托人电话	17701757993
样品来源	委托人寄送	样品数量	1 件
样品状态	黑色柱状	样品接收日期	2024 年 5 月 24 日
检测日期	2024 年 5 月 24 日~2024 年 6 月 4 日	报告编制日期	2024 年 6 月 6 日
检测项目	水分 灰分 四氯化碳吸附率 比表面积 粒度 强度 着火点 表观密度	检测依据	ASTM D 2867-2023 ASTM D 2866-11(2018) ASTM D 3467-04(2020) GB/T 7702.20-2008 ASTM D 2862-16(2022) ASTM D 3802-23 ASTM D 3466-06(2018) ASTM D 2854-2009(2019)
检测结果	见本报告后续页 （检验检测专用章） 签发日期 2024 年 6 月 7 日		
备注	水分（ASTM）、灰分（ASTM）、四氯化碳吸附率（ASTM）、强度（ASTM）、粒度（ASTM）、着火点（ASTM）、表观密度（ASTM）不在 CMA/CNAS 附表范围内，本报告仅作为内部质量控制、科研、教学之用。		

编　　制 Reported by 吴倩　　审　　核 Checked by 许峰　　批　　准 Approved by 赵奇

煤炭科学技术研究院有限公司
煤炭科学技术研究院有限公司检测中心

Test Center of China Coal Research Institute

（煤炭工业节能监测中心）

（Coal Industry Energy Conservation Monitoring Center）

检测报告

Analysis Report

（本报告只适用于来样的检测结果）

（The data sheet is only responsible for the test results of received sample）

实验室编号 Number：HW24050132

样品标识 Identification：CTA TA5 产品批号：306881-9

检测项目		单位	检测结果	客户指定判定依据
水分		%	**0.53**	≤5
灰分		%	**9.67**	≤14
四氯化碳吸附率		%	**61.08**	≥60
比表面积		m^2/g	**1045**	—
强度		%	**98**	≥90
着火点		° C	**518**	—
表观密度		g/mL	**0.479**	—
粒度	≤3.35mm(6 目)	%	**0.85**	≤5
以下空白				

编　　制 Reported by 郭倩　　审　　核 Checked by 冯平　　批　　准 Approved by 赵奇

检 测 报 告

报告编号：2024F-HT0102

检 测 类 别：　来样检测

委 托 单 位：　隧道空气净化国际有限公司

签 发 日 期：　2024 年 6 月 7 日

煤炭科学技术研究院有限公司

煤炭科学技术研究院有限公司检测中心

（煤炭工业节能监测中心）

注 意 事 项

1．报告无“检验检测专用章”无效。

2．检测报告不得局部复制，复制报告未重新加盖“检验检测专用章”无效。

3．报告无审核、批准人签章无效。

4．报告涂改无效。

5．对检测报告若有异议，应于签发之日起十五日内提出，逾期不予受理。

6．报告仅对本次来样的检测结果负责。

机构本部地址：北京市朝阳区和平街青年沟路 5 号

实验室地址：北京市大兴区采育镇北京采育经济开发区育隆大街 5 号

电话：010-80201200，010-80201360，010-84263572

煤炭科学技术研究院有限公司
煤炭科学技术研究院有限公司检测中心
Test Center of China Coal Research Institute
（煤炭工业节能监测中心）
（Coal Industry Energy Conservation Monitoring Center）
检测报告
Analysis Report

实验室编号	HW24050133	样品标识	CTA TA5 产品批号：306881-10
委托单位	隧道空气净化国际有限公司	委托单位地址	/
委托人	齐正革	委托人电话	17701757993
样品来源	委托人寄送	样品数量	1 件
样品状态	黑色柱状	样品接收日期	2024 年 5 月 24 日
检测日期	2024 年 5 月 24 日~2024 年 6 月 5 日	报告编制日期	2024 年 6 月 6 日
检测项目	水分 灰分 四氯化碳吸附率 比表面积 粒度 强度 着火点 表观密度	检测依据	ASTM D 2867-2023 ASTM D 2866-11(2018) ASTM D 3467-04(2020) GB/T 7702.20-2008 ASTM D 2862-16(2022) ASTM D 3802-23 ASTM D 3466-06(2018) ASTM D 2854-2009(2019)
检测结果	见本报告后续页 （检验检测专用章） 签发日期 2024 年 6 月 7 日		
备注	水分（ASTM）、灰分（ASTM）、四氯化碳吸附率（ASTM）、强度（ASTM）、粒度（ASTM）、着火点（ASTM）、表观密度（ASTM）不在 CMA/CNAS 附表范围内，本报告仅作为内部质量控制、科研、教学之用。		

编　　制 Reported by　　审　　核 Checked by　　批　　准 Approved by

煤炭科学技术研究院有限公司
煤炭科学技术研究院有限公司检测中心

Test Center of China Coal Research Institute

（煤炭工业节能监测中心）

（Coal Industry Energy Conservation Monitoring Center）

检测报告

Analysis Report

（本报告只适用于来样的检测结果）

（The data sheet is only responsible for the test results of received sample）

实验室编号 Number：HW24050133

样品标识 Identification：CTA TA5 产品批号：306881-10

检测项目		单位	检测结果	客户指定判定依据
水分		%	**0.45**	≤5
灰分		%	**9.74**	≤14
四氯化碳吸附率		%	**62.11**	≥60
比表面积		m^2/g	**1017**	—
强度		%	**98**	≥90
着火点		° C	**520**	—
表观密度		g/mL	**0.470**	—
粒度	≤3.35mm(6 目)	%	**0.68**	≤5
以下空白				

编　　制 Reported by 梁倩　　审　　核 Checked by 陈平　　批　　准 Approved by 赵奇

检 测 报 告

报告编号：2024F-HT0103

检 测 类 别：　来样检测

委 托 单 位：　隧道空气净化国际有限公司

签 发 日 期：　2024 年 6 月 7 日

煤炭科学技术研究院有限公司

煤炭科学技术研究院有限公司检测中心

（煤炭工业节能监测中心）

注 意 事 项

1．报告无“检验检测专用章”无效。

2．检测报告不得局部复制，复制报告未重新加盖“检验检测专用章”无效。

3．报告无审核、批准人签章无效。

4．报告涂改无效。

5．对检测报告若有异议，应于签发之日起十五日内提出，逾期不予受理。

6．报告仅对本次来样的检测结果负责。

机构本部地址：北京市朝阳区和平街青年沟路 5 号

实验室地址：北京市大兴区采育镇北京采育经济开发区育隆大街 5 号

电话：010-80201200，010-80201360，010-84263572

煤炭科学技术研究院有限公司
煤炭科学技术研究院有限公司检测中心
Test Center of China Coal Research Institute
（煤炭工业节能监测中心）
（Coal Industry Energy Conservation Monitoring Center）
检测报告
Analysis Report

实验室编号	HW24050134	样品标识	CTA TA5 产品批号：306881-11
委托单位	隧道空气净化国际有限公司	委托单位地址	/
委托人	齐正革	委托人电话	17701757993
样品来源	委托人寄送	样品数量	1 件
样品状态	黑色柱状	样品接收日期	2024 年 5 月 24 日
检测日期	2024 年 5 月 24 日~2024 年 6 月 5 日	报告编制日期	2024 年 6 月 6 日
检测项目	水分 灰分 四氯化碳吸附率 比表面积 粒度 强度 着火点 表观密度	检测依据	ASTM D 2867-2023 ASTM D 2866-11(2018) ASTM D 3467-04(2020) GB/T 7702.20-2008 ASTM D 2862-16(2022) ASTM D 3802-23 ASTM D 3466-06(2018) ASTM D 2854-2009(2019)
检测结果	见本报告后续页 （检验检测专用章） 签发日期 2024 年 6 月 7 日		
备注	水分（ASTM）、灰分（ASTM）、四氯化碳吸附率（ASTM）、强度（ASTM）、粒度（ASTM）、着火点（ASTM）、表观密度（ASTM）不在 CMA/CNAS 附表范围内，本报告仅作为内部质量控制、科研、教学之用。		

编　　制 Reported by 吴倩　　审　　核 Checked by 淳平　　批　　准 Approved by 赵奇

煤炭科学技术研究院有限公司
煤炭科学技术研究院有限公司检测中心

Test Center of China Coal Research Institute

（煤炭工业节能监测中心）

（Coal Industry Energy Conservation Monitoring Center）

检测报告

Analysis Report

（本报告只适用于来样的检测结果）

（The data sheet is only responsible for the test results of received sample）

实验室编号 Number：HW24050134

样品标识 Identification：CTA TA5 产品批号：306881-11

检测项目		单位	检测结果	客户指定判定依据
水分		%	**0.50**	≤5
灰分		%	**9.60**	≤14
四氯化碳吸附率		%	**63.20**	≥60
比表面积		m^2/g	**1023**	—
强度		%	**98**	≥90
着火点		° C	**512**	—
表观密度		g/mL	**0.482**	—
粒度	≤3.35mm(6 目)	%	**0.34**	≤5
以下空白				

编　　制 Reported by 吴倩　　审　　核 Checked by 许平　　批　　准 Approved by 赵奇

检 测 报 告

报告编号：2024F-HT0104

检 测 类 别： 来样检测

委 托 单 位： 隧道空气净化国际有限公司

签 发 日 期： 2024 年 6 月 7 日

煤炭科学技术研究院有限公司

煤炭科学技术研究院有限公司检测中心

（煤炭工业节能监测中心）

注 意 事 项

1．报告无“检验检测专用章”无效。

2．检测报告不得局部复制，复制报告未重新加盖“检验检测专用章”无效。

3．报告无审核、批准人签章无效。

4．报告涂改无效。

5．对检测报告若有异议，应于签发之日起十五日内提出，逾期不予受理。

6．报告仅对本次来样的检测结果负责。

机构本部地址：北京市朝阳区和平街青年沟路 5 号

实验室地址：北京市大兴区采育镇北京采育经济开发区育隆大街 5 号

电话：010-80201200，010-80201360，010-84263572

煤炭科学技术研究院有限公司
煤炭科学技术研究院有限公司检测中心
Test Center of China Coal Research Institute
（煤炭工业节能监测中心）
（Coal Industry Energy Conservation Monitoring Center）
检测报告
Analysis Report

实验室编号	HW24050135	样品标识	CTA TA5 产品批号：306881-12
委托单位	隧道空气净化国际有限公司	委托单位地址	/
委托人	齐正革	委托人电话	17701757993
样品来源	委托人寄送	样品数量	1 件
样品状态	黑色柱状	样品接收日期	2024 年 5 月 24 日
检测日期	2024 年 5 月 24 日~2024 年 6 月 6 日	报告编制日期	2024 年 6 月 6 日
检测项目	水分 灰分 四氯化碳吸附率 比表面积 粒度 强度 着火点 表观密度	检测依据	ASTM D 2867-2023 ASTM D 2866-11(2018) ASTM D 3467-04(2020) GB/T 7702.20-2008 ASTM D 2862-16(2022) ASTM D 3802-23 ASTM D 3466-06(2018) ASTM D 2854-2009(2019)
检测结果	见本报告后续页 （检验检测专用章） 签发日期 2024 年 6 月 7 日		
备注	水分（ASTM）、灰分（ASTM）、四氯化碳吸附率（ASTM）、强度（ASTM）、粒度（ASTM）、着火点（ASTM）、表观密度（ASTM）不在 CMA/CNAS 附表范围内，本报告仅作为内部质量控制、科研、教学之用。		

编　　制 Reported by　　审　　核 Checked by　　批　　准 Approved by

煤炭科学技术研究院有限公司
煤炭科学技术研究院有限公司检测中心

Test Center of China Coal Research Institute

（煤炭工业节能监测中心）

（Coal Industry Energy Conservation Monitoring Center）

检测报告

Analysis Report

（本报告只适用于来样的检测结果）

（The data sheet is only responsible for the test results of received sample）

实验室编号 Number：HW24050135

样品标识 Identification：CTA TA5 产品批号：306881-12

检测项目		单位	检测结果	客户指定判定依据
水分		%	**0.52**	≤5
灰分		%	**9.98**	≤14
四氯化碳吸附率		%	**65.83**	≥60
比表面积		m^2/g	**1038**	—
强度		%	**98**	≥90
着火点		° C	**518**	—
表观密度		g/mL	**0.476**	—
粒度	≤3.35mm(6目)	%	**1.01**	≤5
以下空白				

编　　制 Reported by 吴倩　　审　　核 Checked by 淳平　　批　　准 Approved by 赵奇

检 测 报 告

报告编号：2024F-HT0105

检 测 类 别： 来样检测

委 托 单 位： 隧道空气净化国际有限公司

签 发 日 期： 2024 年 6 月 7 日

煤炭科学技术研究院有限公司

煤炭科学技术研究院有限公司检测中心

（煤炭工业节能监测中心）

注 意 事 项

1．报告无“检验检测专用章”无效。

2．检测报告不得局部复制，复制报告未重新加盖“检验检测专用章”无效。

3．报告无审核、批准人签章无效。

4．报告涂改无效。

5．对检测报告若有异议，应于签发之日起十五日内提出，逾期不予受理。

6．报告仅对本次来样的检测结果负责。

机构本部地址：北京市朝阳区和平街青年沟路 5 号

实验室地址：北京市大兴区采育镇北京采育经济开发区育隆大街 5 号

电话：010-80201200，010-80201360，010-84263572

煤炭科学技术研究院有限公司
煤炭科学技术研究院有限公司检测中心
Test Center of China Coal Research Institute
（煤炭工业节能监测中心）
（Coal Industry Energy Conservation Monitoring Center）
检测报告
Analysis Report

实验室编号	HW24050136	样品标识	CTA TA5 产品批号：306881-13
委托单位	隧道空气净化国际有限公司	委托单位地址	/
委托人	齐正革	委托人电话	17701757993
样品来源	委托人寄送	样品数量	1 件
样品状态	黑色柱状	样品接收日期	2024 年 5 月 24 日
检测日期	2024 年 5 月 24 日~2024 年 6 月 6 日	报告编制日期	2024 年 6 月 6 日
检测项目	水分 灰分 四氯化碳吸附率 比表面积 粒度 强度 着火点 表观密度	检测依据	ASTM D 2867-2023 ASTM D 2866-11(2018) ASTM D 3467-04(2020) GB/T 7702.20-2008 ASTM D 2862-16(2022) ASTM D 3802-23 ASTM D 3466-06(2018) ASTM D 2854-2009(2019)
检测结果	见本报告后续页 （检验检测专用章） 签发日期 2024 年 6 月 7 日		
备注	水分（ASTM）、灰分（ASTM）、四氯化碳吸附率（ASTM）、强度（ASTM）、粒度（ASTM）、着火点（ASTM）、表观密度（ASTM）不在 CMA/CNAS 附表范围内，本报告仅作为内部质量控制、科研、教学之用。		

编　　制 Reported by　　审　　核 Checked by　　批　　准 Approved by

煤炭科学技术研究院有限公司
煤炭科学技术研究院有限公司检测中心

Test Center of China Coal Research Institute

（煤炭工业节能监测中心）

（Coal Industry Energy Conservation Monitoring Center）

检测报告

Analysis Report

（本报告只适用于来样的检测结果）

（The data sheet is only responsible for the test results of received sample）

实验室编号 Number：HW24050136

样品标识 Identification：CTA TA5 产品批号：306881-13

检测项目		单位	检测结果	客户指定判定依据
水分		%	**0.64**	≤5
灰分		%	**9.77**	≤14
四氯化碳吸附率		%	**65.58**	≥60
比表面积		m^2/g	**1017**	—
强度		%	**98**	≥90
着火点		° C	**523**	—
表观密度		g/mL	**0.478**	—
粒度	≤3.35mm(6 目)	%	**0.82**	≤5
以下空白				

编　　制 Reported by 吴倩　　审　　核 Checked by 淳平　　批　　准 Approved by 赵奇

检 测 报 告

报告编号：2024F-HT0153

检测类别：来样检测

委托单位：隧道空气净化国际有限公司

签发日期：2024 年 8 月 6 日

煤炭科学技术研究院有限公司

煤炭科学技术研究院有限公司检测中心

（煤炭工业节能监测中心）

注 意 事 项

1. 报告无“检验检测专用章”无效。

2. 检测报告不得局部复制，复制报告未重新加盖“检验检测专用章”无效。

3. 报告无审核、批准人签章无效。

4. 报告涂改无效。

5. 对检测报告若有异议，应于签发之日起十五日内提出，逾期不予受理。

6. 报告仅对本次来样的检测结果负责。

机构本部地址：北京市朝阳区和平街青年沟路 5 号

实验室地址：北京市大兴区采育镇北京采育经济开发区育隆大街 5 号

电话：010-80201200，010-80201360，010-84263572

检 测 报 告

报告编号：2024F-HT0212

检 测 类 别： 来样检测

委 托 单 位： 隧道空气净化国际有限公司

签 发 日 期： 2024 年 9 月 29 日

煤炭科学技术研究院有限公司

煤炭科学技术研究院有限公司检测中心

（煤炭工业节能监测中心）

注 意 事 项

1．报告无“检验检测专用章”无效。

2．检测报告不得局部复制，复制报告未重新加盖“检验检测专用章”无效。

3．报告无审核、批准人签章无效。

4．报告涂改无效。

5．对检测报告若有异议，应于签发之日起十五日内提出，逾期不予受理。

6．报告仅对本次来样的检测结果负责。

机构本部地址：北京市朝阳区和平街青年沟路 5 号

实验室地址：北京市大兴区采育镇北京采育经济开发区育隆大街 5 号

电话：010-80201200，010-80201360，010-84263572

煤炭科学技术研究院有限公司
煤炭科学技术研究院有限公司检测中心
Test Center of China Coal Research Institute
（煤炭工业节能监测中心）
（Coal Industry Energy Conservation Monitoring Center）
检测报告
Analysis Report

实验室编号	HW24090068	样品标识	CTA TA5 产品批号：317277-1
委托单位	隧道空气净化国际有限公司	委托单位地址	/
委托人	齐正革	委托人电话	17701757993
样品来源	委托人寄送	样品数量	1 件
样品状态	黑色柱状	样品接收日期	2024 年 9 月 20 日
检测日期	2024 年 9 月 20 日~2024 年 9 月 27 日	报告编制日期	2024 年 9 月 27 日
检测项目	水分 灰分 四氯化碳吸附率 比表面积 粒度 强度 着火点 表观密度	检测依据	ASTM D 2867-2023 ASTM D 2866-11(2018) ASTM D 3467-04(2020) GB/T 7702.20-2008 ASTM D 2862-16(2022) ASTM D 3802-23 ASTM D 3466-06(2018) ASTM D 2854-2009(2019)
检测结果	见本报告后续页 （检验检测专用章） 签发日期 2024 年 9 月 29 日		
备注	水分（ASTM）、灰分（ASTM）、四氯化碳吸附率（ASTM）、强度（ASTM）、粒度（ASTM）、着火点（ASTM）、表观密度（ASTM）不在 CMA/CNAS 附表范围内，本报告仅作为内部质量控制、科研、教学之用。		

编　　制 Reported by　　审　　核 Checked by　　批　　准 Approved by

煤炭科学技术研究院有限公司
煤炭科学技术研究院有限公司检测中心
Test Center of China Coal Research Institute
（煤炭工业节能监测中心）
（Coal Industry Energy Conservation Monitoring Center）
检测报告
Analysis Report
（本报告只适用于来样的检测结果）
（The data sheet is only responsible for the test results of received sample）

实验室编号 Number：HW24090068

样品标识 Identification：CTA TA5 产品批号：317277-1

检测项目		单位	检测结果	客户指定判定依据
水分		%	**1.46**	≤5
灰分		%	**8.96**	≤14
四氯化碳吸附率		%	**63.38**	≥60
比表面积		m^2/g	**1014**	—
强度		%	**99**	≥90
着火点		° C	**517**	—
表观密度		g/mL	**0.480**	—
粒度	≤3.35mm(6 目)	%	**1.10**	≤5
以下空白				

编　　制 Reported by 吴倩　　审　　核 Checked by 谭平　　批　　准 Approved by 赵奇

检 测 报 告

报告编号：2024F-HT0217

检 测 类 别： 来样检测

委 托 单 位： 隧道空气净化国际有限公司

签 发 日 期： 2024 年 10 月 12 日

煤炭科学技术研究院有限公司

煤炭科学技术研究院有限公司检测中心

（煤炭工业节能监测中心）

注 意 事 项

1．报告无“检验检测专用章”无效。

2．检测报告不得局部复制，复制报告未重新加盖“检验检测专用章”无效。

3．报告无审核、批准人签章无效。

4．报告涂改无效。

5．对检测报告若有异议，应于签发之日起十五日内提出，逾期不予受理。

6．报告仅对本次来样的检测结果负责。

机构本部地址：北京市朝阳区和平街青年沟路 5 号

实验室地址：北京市大兴区采育镇北京采育经济开发区育隆大街 5 号

电话：010-80201200，010-80201360，010-84263572

煤炭科学技术研究院有限公司
煤炭科学技术研究院有限公司检测中心
Test Center of China Coal Research Institute
（煤炭工业节能监测中心）
（Coal Industry Energy Conservation Monitoring Center）
检测报告
Analysis Report

实验室编号	HW24090098	样品标识	CTA TA5 产品批号：317277-2
委托单位	隧道空气净化国际有限公司	委托单位地址	/
委托人	齐正革	委托人电话	17701757993
样品来源	委托人寄送	样品数量	1 件
样品状态	黑色柱状	样品接收日期	2024 年 9 月 25 日
检测日期	2024 年 9 月 25 日~2024 年 10 月 9 日	报告编制日期	2024 年 10 月 10 日
检测项目	水分 灰分 四氯化碳吸附率 比表面积 粒度 强度 着火点 表观密度	检测依据	ASTM D 2867-2023 ASTM D 2866-11(2018) ASTM D 3467-04(2020) GB/T 7702.20-2008 ASTM D 2862-16(2022) ASTM D 3802-23 ASTM D 3466-06(2018) ASTM D 2854-2009(2019)
检测结果	见本报告后续页 （检验检测专用章） 签发日期 2024 年 10 月 12 日		
备注	以上美标测试的项目均不在 CMA/CNAS 附表范围内，本报告仅作为内部质量控制、科研、教学之用。		

编　　制 Reported by　　审　　核 Checked by　　批　　准 Approved by

煤炭科学技术研究院有限公司
煤炭科学技术研究院有限公司检测中心

Test Center of China Coal Research Institute

（煤炭工业节能监测中心）

（Coal Industry Energy Conservation Monitoring Center）

检测报告

Analysis Report

（本报告只适用于来样的检测结果）

（The data sheet is only responsible for the test results of received sample）

实验室编号 Number：HW24090098

样品标识 Identification：CTA TA5 产品批号：317277-2

检测项目		单位	检测结果	根据检测委托方要求备注以下指定判定依据
水分		%	**3.67**	≤5
灰分		%	**9.42**	≤14
四氯化碳吸附率		%	**63.03**	≥60
比表面积		m^2/g	**1008**	—
强度		%	**98**	≥90
着火点		℃	**509**	—
表观密度		g/mL	**0.467**	—
粒度	≤3.35mm(6 目)	%	**1.38**	≤5
以下空白				

编　　制 Reported by 吴倩　　审　　核 Checked by 陈卫　　批　　准 Approved by 赵杏

检 测 报 告

报告编号：2024F-HT0218

检 测 类 别：　来样检测

委 托 单 位：　隧道空气净化国际有限公司

签 发 日 期：　2024 年 10 月 12 日

煤炭科学技术研究院有限公司

煤炭科学技术研究院有限公司检测中心

（煤炭工业节能监测中心）

注 意 事 项

1．报告无“检验检测专用章”无效。

2．检测报告不得局部复制，复制报告未重新加盖“检验检测专用章”无效。

3．报告无审核、批准人签章无效。

4．报告涂改无效。

5．对检测报告若有异议，应于签发之日起十五日内提出，逾期不予受理。

6．报告仅对本次来样的检测结果负责。

机构本部地址：北京市朝阳区和平街青年沟路 5 号

实验室地址：北京市大兴区采育镇北京采育经济开发区育隆大街 5 号

电话：010-80201200，010-80201360，010-84263572

煤炭科学技术研究院有限公司
煤炭科学技术研究院有限公司检测中心
Test Center of China Coal Research Institute
（煤炭工业节能监测中心）
（Coal Industry Energy Conservation Monitoring Center）
检测报告
Analysis Report

实验室编号	HW24090099	样品标识	CTA TA5 产品批号：317277-3
委托单位	隧道空气净化国际有限公司	委托单位地址	/
委托人	齐正革	委托人电话	17701757993
样品来源	委托人寄送	样品数量	1 件
样品状态	黑色柱状	样品接收日期	2024 年 9 月 25 日
检测日期	2024 年 9 月 25 日~2024 年 10 月 10 日	报告编制日期	2024 年 10 月 11 日
检测项目	水分 灰分 四氯化碳吸附率 比表面积 粒度 强度 着火点 表观密度	检测依据	ASTM D 2867-2023 ASTM D 2866-11(2018) ASTM D 3467-04(2020) GB/T 7702.20-2008 ASTM D 2862-16(2022) ASTM D 3802-23 ASTM D 3466-06(2018) ASTM D 2854-2009(2019)
检测结果	见本报告后续页 （检验检测专用章） 签发日期 2024 年 10 月 12 日		
备注	以上美标测试的项目均不在 CMA/CNAS 附表范围内不在 CMA/CNAS 附表范围内，本报告仅作为内部质量控制、科研、教学之用。		

编　　制 Reported by　　审　　核 Checked by　　批　　准 Approved by

煤炭科学技术研究院有限公司
煤炭科学技术研究院有限公司检测中心

Test Center of China Coal Research Institute

（煤炭工业节能监测中心）

（Coal Industry Energy Conservation Monitoring Center）

检测报告

Analysis Report

（本报告只适用于来样的检测结果）

（The data sheet is only responsible for the test results of received sample）

实验室编号 Number：HW24090099

样品标识 Identification：CTA TA5 产品批号：317277-3

检测项目		单位	检测结果	根据检测委托方要求备注以下指定判定依据
水分		%	**2.19**	≤5
灰分		%	**9.31**	≤14
四氯化碳吸附率		%	**64.60**	≥60
比表面积		m^2/g	**1022**	—
强度		%	**98**	≥90
着火点		℃	**537**	—
表观密度		g/mL	**0.491**	—
粒度	≤3.35mm(6 目)	%	**1.30**	≤5
以下空白				

编　　制 Reported by　　审　　核 Checked by　　批　　准 Approved by

检 测 报 告

报告编号：2024F-HT0226

检 测 类 别： 来样检测

委 托 单 位： 隧道空气净化国际有限公司

签 发 日 期： 2024 年 10 月 24 日

煤炭科学技术研究院有限公司

煤炭科学技术研究院有限公司检测中心

（煤炭工业节能监测中心）

注 意 事 项

1．报告无“检验检测专用章”无效。

2．检测报告不得局部复制，复制报告未重新加盖“检验检测专用章”无效。

3．报告无审核、批准人签章无效。

4．报告涂改无效。

5．对检测报告若有异议，应于签发之日起十五日内提出，逾期不予受理。

6．报告仅对本次来样的检测结果负责。

机构本部地址：北京市朝阳区和平街青年沟路 5 号

实验室地址：北京市大兴区采育镇北京采育经济开发区育隆大街 5 号

电话：010-80201200，010-80201360，010-84263572

煤炭科学技术研究院有限公司
煤炭科学技术研究院有限公司检测中心

Test Center of China Coal Research Institute

（煤炭工业节能监测中心）

（Coal Industry Energy Conservation Monitoring Center）

检测报告

Analysis Report

实验室编号	HW24100019	样品标识	CTA TA5 产品批号：317277-4
委托单位	隧道空气净化国际有限公司	委托单位地址	/
委托人	齐正革	委托人电话	17701757993
样品来源	委托人寄送	样品数量	1 件
样品状态	黑色柱状	样品接收日期	2024 年 10 月 11 日
检测日期	2024 年 10 月 11 日~2024 年 10 月 22 日	报告编制日期	2024 年 10 月 22 日
检测项目	水分 灰分 四氯化碳吸附率 比表面积 粒度 强度 着火点 表观密度	检测依据	ASTM D 2867-2023 ASTM D 2866-11(2018) ASTM D 3467-04(2020) GB/T 7702.20-2008 ASTM D 2862-16(2022) ASTM D 3802-23 ASTM D 3466-06(2018) ASTM D 2854-2009(2019)
检测结果	见本报告后续页 （检验检测专用章） 签发日期 2024 年 10 月 24 日		
备注	以上美标测试的项目均不在 CMA/CNAS 附表范围内，本报告仅作为内部质量控制、科研、教学之用。		

编　　制 Reported by　　审　　核 Checked by　　批　　准 Approved by

煤炭科学技术研究院有限公司
煤炭科学技术研究院有限公司检测中心
Test Center of China Coal Research Institute
（煤炭工业节能监测中心）
（Coal Industry Energy Conservation Monitoring Center）
检测报告
Analysis Report
（本报告只适用于来样的检测结果）
（The data sheet is only responsible for the test results of received sample）

实验室编号 Number：HW24100019

样品标识 Identification：CTA TA5 产品批号：317277-4

检测项目		单位	检测结果	根据检测委托方要求备注以下指定判定依据
水分		%	**2.26**	≤5
灰分		%	**9.10**	≤14
四氯化碳吸附率		%	**62.68**	≥60
比表面积		m^2/g	**1039**	—
强度		%	**98**	≥90
着火点		℃	**540**	—
表观密度		g/mL	**0.491**	—
粒度	≤3.35mm(6 目)	%	**0.90**	≤5
以下空白				

编　　制 Reported by　　审　　核 Checked by　　批　　准 Approved by

检 测 报 告

报告编号：2024F-HT0227

检 测 类 别： 来样检测

委 托 单 位： 隧道空气净化国际有限公司

签 发 日 期： 2024 年 10 月 24 日

煤炭科学技术研究院有限公司

煤炭科学技术研究院有限公司检测中心

（煤炭工业节能监测中心）

注 意 事 项

1．报告无“检验检测专用章”无效。

2．检测报告不得局部复制，复制报告未重新加盖“检验检测专用章”无效。

3．报告无审核、批准人签章无效。

4．报告涂改无效。

5．对检测报告若有异议，应于签发之日起十五日内提出，逾期不予受理。

6．报告仅对本次来样的检测结果负责。

机构本部地址：北京市朝阳区和平街青年沟路 5 号

实验室地址：北京市大兴区采育镇北京采育经济开发区育隆大街 5 号

电话：010-80201200，010-80201360，010-84263572

煤炭科学技术研究院有限公司
煤炭科学技术研究院有限公司检测中心
Test Center of China Coal Research Institute
（煤炭工业节能监测中心）
（Coal Industry Energy Conservation Monitoring Center）
检测报告
Analysis Report

实验室编号	HW24100020	样品标识	CTA TA5 产品批号：317277-5
委托单位	隧道空气净化国际有限公司	委托单位地址	/
委托人	齐正革	委托人电话	17701757993
样品来源	委托人寄送	样品数量	1 件
样品状态	黑色柱状	样品接收日期	2024 年 10 月 11 日
检测日期	2024 年 10 月 11 日~2024 年 10 月 22 日	报告编制日期	2024 年 10 月 22 日
检测项目	水分 灰分 四氯化碳吸附率 比表面积 粒度 强度 着火点 表观密度	检测依据	ASTM D 2867-2023 ASTM D 2866-11(2018) ASTM D 3467-04(2020) GB/T 7702.20-2008 ASTM D 2862-16(2022) ASTM D 3802-23 ASTM D 3466-06(2018) ASTM D 2854-2009(2019)
检测结果	见本报告后续页 （检验检测专用章） 签发日期：2024 年 10 月 24 日		
备注	以上美标测试的项目均不在 CMA/CNAS 附表范围内，本报告仅作为内部质量控制、科研、教学之用。		

编　　制 Reported by　　审　　核 Checked by　　批　　准 Approved by

煤炭科学技术研究院有限公司
煤炭科学技术研究院有限公司检测中心

Test Center of China Coal Research Institute

（煤炭工业节能监测中心）

（Coal Industry Energy Conservation Monitoring Center）

检测报告

Analysis Report

（本报告只适用于来样的检测结果）

（The data sheet is only responsible for the test results of received sample）

实验室编号 Number：HW24100020

样品标识 Identification：CTA TA5 产品批号：317277-5

检测项目		单位	检测结果	根据检测委托方要求备注以下指定判定依据
水分		%	**2.44**	≤5
灰分		%	**9.14**	≤14
四氯化碳吸附率		%	**63.58**	≥60
比表面积		m^2/g	**1042**	—
强度		%	**98**	≥90
着火点		℃	**514**	—
表观密度		g/mL	**0.493**	—
粒度	≤3.35mm(6 目)	%	**1.29**	≤5
以下空白				

编　　制 Reported by 吴倩　　审　　核 Checked by 淳平　　批　　准 Approved by 赵奇

检 测 报 告

报告编号：2024F-HT0241

检 测 类 别： 来样检测

委 托 单 位： 隧道空气净化国际有限公司

签 发 日 期： 2024 年 10 月 31 日

煤炭科学技术研究院有限公司

煤炭科学技术研究院有限公司检测中心

（煤炭工业节能监测中心）

注 意 事 项

1．报告无“检验检测专用章”无效。

2．检测报告不得局部复制，复制报告未重新加盖“检验检测专用章”无效。

3．报告无审核、批准人签章无效。

4．报告涂改无效。

5．对检测报告若有异议，应于签发之日起十五日内提出，逾期不予受理。

6．报告仅对本次来样的检测结果负责。

机构本部地址：北京市朝阳区和平街青年沟路 5 号

实验室地址：北京市大兴区采育镇北京采育经济开发区育隆大街 5 号

电话：010-80201200，010-80201360，010-84263572

煤炭科学技术研究院有限公司
煤炭科学技术研究院有限公司检测中心
Test Center of China Coal Research Institute
（煤炭工业节能监测中心）
（Coal Industry Energy Conservation Monitoring Center）
检测报告
Analysis Report

实验室编号	HW24100052	样品标识	CTA TA5 产品批号：317277-8
委托单位	隧道空气净化国际有限公司	委托单位地址	/
委托人	齐正革	委托人电话	17701757993
样品来源	委托人寄送	样品数量	1 件
样品状态	黑色柱状	样品接收日期	2024 年 10 月 22 日
检测日期	2024 年 10 月 22 日~2024 年 10 月 31 日	报告编制日期	2024 年 10 月 31 日
检测项目	水分 灰分 四氯化碳吸附率 比表面积 粒度 强度 着火点 表观密度	检测依据	ASTM D 2867-2023 ASTM D 2866-11(2018) ASTM D 3467-04(2020) GB/T 7702.20-2008 ASTM D 2862-16(2022) ASTM D 3802-23 ASTM D 3466-06(2018) ASTM D 2854-2009(2019)
检测结果	见本报告后续页 （检验检测专用章） 签发日期 2024 年 10 月 31 日		
备注	以上美标测试的项目均不在 CMA/CNAS 附表范围内，本报告仅作为内部质量控制、科研、教学之用。		

编　　制 Reported by　　审　　核 Checked by　　批　　准 Approved by

煤炭科学技术研究院有限公司
煤炭科学技术研究院有限公司检测中心

Test Center of China Coal Research Institute

（煤炭工业节能监测中心）

（Coal Industry Energy Conservation Monitoring Center）

检测报告

Analysis Report

（本报告只适用于来样的检测结果）

（The data sheet is only responsible for the test results of received sample）

实验室编号 Number：HW24100052

样品标识 Identification：CTA TA5 产品批号：317277-8

检测项目		单位	检测结果	根据检测委托方要求备注以下指定判定依据
水分		%	**1.46**	≤5
灰分		%	**8.98**	≤14
四氯化碳吸附率		%	**62.28**	≥60
比表面积		m^2/g	**1049**	—
强度		%	**98**	≥90
着火点		℃	**516**	—
表观密度		g/mL	**0.483**	—
粒度	≤3.35mm(6 目)	%	**0.91**	≤5
以下空白				

编　　制 Reported by　　审　　核 Checked by　　批　　准 Approved by

检 测 报 告

报告编号：2024F-HT0242

检 测 类 别： 来样检测

委 托 单 位： 隧道空气净化国际有限公司

签 发 日 期： 2024 年 10 月 31 日

煤炭科学技术研究院有限公司

煤炭科学技术研究院有限公司检测中心

（煤炭工业节能监测中心）

注 意 事 项

1．报告无“检验检测专用章”无效。

2．检测报告不得局部复制，复制报告未重新加盖“检验检测专用章”无效。

3．报告无审核、批准人签章无效。

4．报告涂改无效。

5．对检测报告若有异议，应于签发之日起十五日内提出，逾期不予受理。

6．报告仅对本次来样的检测结果负责。

机构本部地址：北京市朝阳区和平街青年沟路 5 号

实验室地址：北京市大兴区采育镇北京采育经济开发区育隆大街 5 号

电话：010-80201200，010-80201360，010-84263572

煤炭科学技术研究院有限公司
煤炭科学技术研究院有限公司检测中心
Test Center of China Coal Research Institute
（煤炭工业节能监测中心）
（Coal Industry Energy Conservation Monitoring Center）
检测报告
Analysis Report

实验室编号	HW24100053	样品标识	CTA TA5 产品批号：317277-9
委托单位	隧道空气净化国际有限公司	委托单位地址	/
委托人	齐正革	委托人电话	17701757993
样品来源	委托人寄送	样品数量	1 件
样品状态	黑色柱状	样品接收日期	2024 年 10 月 22 日
检测日期	2024 年 10 月 22 日~2024 年 10 月 30 日	报告编制日期	2024 年 10 月 31 日
检测项目	水分 灰分 四氯化碳吸附率 比表面积 粒度 强度 着火点 表观密度	检测依据	ASTM D 2867-2023 ASTM D 2866-11(2018) ASTM D 3467-04(2020) GB/T 7702.20-2008 ASTM D 2862-16(2022) ASTM D 3802-23 ASTM D 3466-06(2018) ASTM D 2854-2009(2019)
检测结果	见本报告后续页 （检验检测专用章） 签发日期 2024 年 10 月 31 日		
备注	以上美标测试的项目均不在 CMA/CNAS 附表范围内，本报告仅作为内部质量控制、科研、教学之用。		

编　　制 Reported by　　审　　核 Checked by　　批　　准 Approved by

煤炭科学技术研究院有限公司
煤炭科学技术研究院有限公司检测中心
Test Center of China Coal Research Institute
（煤炭工业节能监测中心）
（Coal Industry Energy Conservation Monitoring Center）
检测报告
Analysis Report
（本报告只适用于来样的检测结果）
（The data sheet is only responsible for the test results of received sample）

实验室编号 Number：HW24100053

样品标识 Identification：CTA TA5 产品批号：317277-9

检测项目		单位	检测结果	根据检测委托方要求备注以下指定判定依据
水分		%	**1.46**	≤5
灰分		%	**8.90**	≤14
四氯化碳吸附率		%	**62.33**	≥60
比表面积		m^2/g	**1008**	—
强度		%	**98**	≥90
着火点		℃	**520**	—
表观密度		g/mL	**0.490**	—
粒度	≤3.35mm(6 目)	%	**1.14**	≤5
以下空白				

编　　制 Reported by　　审　　核 Checked by　　批　　准 Approved by

检 测 报 告

报告编号：2024F-HT0265

检 测 类 别： 来样检测

委 托 单 位： 隧道空气净化国际有限公司

签 发 日 期： 2024 年 11 月 22 日

煤炭科学技术研究院有限公司

煤炭科学技术研究院有限公司检测中心

（煤炭工业节能监测中心）

注　意　事　项

1．报告无“检验检测专用章”无效。

2．检测报告不得局部复制，复制报告未重新加盖“检验检测专用章”无效。

3．报告无审核、批准人签章无效。

4．报告涂改无效。

5．对检测报告若有异议，应于签发之日起十五日内提出，逾期不予受理。

6．报告仅对本次来样的检测结果负责。

机构本部地址：北京市朝阳区和平街青年沟路 5 号

实验室地址：北京市大兴区采育镇北京采育经济开发区育隆大街 5 号

电话：010-80201200，010-80201360，010-84263572

煤炭科学技术研究院有限公司
煤炭科学技术研究院有限公司检测中心

Test Center of China Coal Research Institute

（煤炭工业节能监测中心）

（Coal Industry Energy Conservation Monitoring Center）

检测报告

Analysis Report

实验室编号	HW24110029	样品标识	CTA TA5 产品批号：317277-10
委托单位	隧道空气净化国际有限公司	委托单位地址	/
委托人	齐正革	委托人电话	17701757993
样品来源	委托人寄送	样品数量	1 件
样品状态	黑色柱状	样品接收日期	2024 年 11 月 5 日
检测日期	2024 年 11 月 5 日~2024 年 11 月 15 日	报告编制日期	2024 年 11 月 15 日
检测项目	水分 灰分 四氯化碳吸附率 比表面积 粒度 强度 着火点 表观密度	检测依据	ASTM D 2867-2023 ASTM D 2866-11(2018) ASTM D 3467-04(2020) GB/T 7702.20-2008 ASTM D 2862-16(2022) ASTM D 3802-23 ASTM D 3466-06(2018) ASTM D 2854-2009(2019)
检测结果	见本报告后续页 （检验检测专用章） 签发日期 2024 年 11 月 22 日		
备注	以上美标测试的项目均不在 CMA/CNAS 附表范围内，本报告仅作为内部质量控制、科研、教学之用。		

编　　制 Reported by 吴倩　　审　　核 Checked by 深州　　批　　准 Approved by 赵奇

煤炭科学技术研究院有限公司
煤炭科学技术研究院有限公司检测中心
Test Center of China Coal Research Institute
（煤炭工业节能监测中心）
（Coal Industry Energy Conservation Monitoring Center）
检测报告
Analysis Report
（本报告只适用于来样的检测结果）
（The data sheet is only responsible for the test results of received sample）

实验室编号 Number：HW24110029

样品标识 Identification：CTA TA5 产品批号：317277-10

检测项目		单位	检测结果	根据检测委托方要求备注以下指定判定依据
水分		%	**1.27**	≤5
灰分		%	**9.54**	≤14
四氯化碳吸附率		%	**66.98**	≥60
比表面积		m^2/g	**1044**	—
强度		%	**98**	≥90
着火点		℃	**529**	—
表观密度		g/mL	**0.473**	—
粒度	≤3.35mm(6 目)	%	**1.90**	≤5
以下空白				

编　　制 Reported by　　审　　核 Checked by　　批　　准 Approved by

检 测 报 告

报告编号：2024F-HT0266

检 测 类 别： 来样检测

委 托 单 位： 隧道空气净化国际有限公司

签 发 日 期： 2024 年 11 月 22 日

煤炭科学技术研究院有限公司

煤炭科学技术研究院有限公司检测中心

（煤炭工业节能监测中心）

注　意　事　项

1．报告无“检验检测专用章”无效。

2．检测报告不得局部复制，复制报告未重新加盖“检验检测专用章”无效。

3．报告无审核、批准人签章无效。

4．报告涂改无效。

5．对检测报告若有异议，应于签发之日起十五日内提出，逾期不予受理。

6．报告仅对本次来样的检测结果负责。

机构本部地址：北京市朝阳区和平街青年沟路 5 号

实验室地址：北京市大兴区采育镇北京采育经济开发区育隆大街 5 号

电话：010-80201200，010-80201360，010-84263572

煤炭科学技术研究院有限公司
煤炭科学技术研究院有限公司检测中心
Test Center of China Coal Research Institute
（煤炭工业节能监测中心）
（Coal Industry Energy Conservation Monitoring Center）
检测报告
Analysis Report

实验室编号	HW24110030	样品标识	CTA TA5 产品批号：317277-11
委托单位	隧道空气净化国际有限公司	委托单位地址	/
委托人	齐正革	委托人电话	17701757993
样品来源	委托人寄送	样品数量	1 件
样品状态	黑色柱状	样品接收日期	2024 年 11 月 5 日
检测日期	2024 年 11 月 5 日~2024 年 11 月 15 日	报告编制日期	2024 年 11 月 15 日
检测项目	水分 灰分 四氯化碳吸附率 比表面积 粒度 强度 着火点 表观密度	检测依据	ASTM D 2867-2023 ASTM D 2866-11(2018) ASTM D 3467-04(2020) GB/T 7702.20-2008 ASTM D 2862-16(2022) ASTM D 3802-23 ASTM D 3466-06(2018) ASTM D 2854-2009(2019)
检测结果	见本报告后续页 （检验检测专用章） 签发日期 2024 年 11 月 22 日		
备注	以上美标测试的项目均不在 CMA/CNAS 附表范围内，本报告仅作为内部质量控制、科研、教学之用。		

编　　制 Reported by 吴倩　　审　　核 Checked by 陈卫　　批　　准 Approved by 麦奇

煤炭科学技术研究院有限公司
煤炭科学技术研究院有限公司检测中心

Test Center of China Coal Research Institute

（煤炭工业节能监测中心）

（Coal Industry Energy Conservation Monitoring Center）

检测报告

Analysis Report

（本报告只适用于来样的检测结果）

（The data sheet is only responsible for the test results of received sample）

实验室编号 Number：HW24110030

样品标识 Identification：CTA TA5 产品批号：317277-11

检测项目		单位	检测结果	根据检测委托方要求备注以下指定判定依据
水分		%	**1.69**	≤5
灰分		%	**9.44**	≤14
四氯化碳吸附率		%	**63.42**	≥60
比表面积		m^2/g	**1032**	—
强度		%	**98**	≥90
着火点		℃	**512**	—
表观密度		g/mL	**0.490**	—
粒度	≤3.35mm(6 目)	%	**0.89**	≤5
以下空白				

编　　制 Reported by　　审　　核 Checked by　　批　　准 Approved by

检 测 报 告

报告编号：2025F-HT0022

检 测 类 别： 来样检测

委 托 单 位： 隧道空气净化国际有限公司

签 发 日 期： 2025 年 1 月 23 日

煤炭科学技术研究院有限公司

煤炭科学技术研究院有限公司检测中心

（煤炭工业节能监测中心）

注　意　事　项

1．报告无“检验检测专用章”无效。

2．检测报告不得局部复制，复制报告未重新加盖“检验检测专用章”无效。

3．报告无审核、批准人签章无效。

4．报告涂改无效。

5．对检测报告若有异议，应于签发之日起十五日内提出，逾期不予受理。

6．报告仅对本次来样的检测结果负责。

机构本部地址：北京市朝阳区和平街青年沟路 5 号

实验室地址：北京市大兴区采育镇北京采育经济开发区育隆大街 5 号

电话：010-80201200，010-80201360，010-84263572

煤炭科学技术研究院有限公司
煤炭科学技术研究院有限公司检测中心
Test Center of China Coal Research Institute
（煤炭工业节能监测中心）
（Coal Industry Energy Conservation Monitoring Center）
检测报告
Analysis Report

实验室编号	HW25010032	样品标识	CTA TA5 产品批号：317277-12
委托单位	隧道空气净化国际有限公司	委托单位地址	/
委托人	齐正革	委托人电话	17701757993
样品来源	委托人寄送	样品数量	1 件
样品状态	黑色柱状	样品接收日期	2025 年 1 月 13 日
检测日期	2025 年 1 月 13 日~2025 年 1 月 22 日	报告编制日期	2025 年 1 月 22 日
检测项目	水分 灰分 四氯化碳吸附率 比表面积 粒度 强度 着火点 表观密度	检测依据	ASTM D 2867-2023 ASTM D 2866-11(2018) ASTM D 3467-04(2020) GB/T 7702.20-2008 ASTM D 2862-16(2022) ASTM D 3802-23 ASTM D 3466-06(2018) ASTM D 2854-2009(2019)
检测结果	见本报告后续页 （检验检测专用章） 签发日期 2025 年 1 月 23 日		
备注	以上美标测试的项目均不在 CMA/CNAS 附表范围内，本报告仅作为内部质量控制、科研、教学之用。		

编　　制 Reported by　　审　　核 Checked by　　批　　准 Approved by

煤炭科学技术研究院有限公司
煤炭科学技术研究院有限公司检测中心
Test Center of China Coal Research Institute
（煤炭工业节能监测中心）
（Coal Industry Energy Conservation Monitoring Center）
检测报告
Analysis Report
（本报告只适用于来样的检测结果）
（The data sheet is only responsible for the test results of received sample）

实验室编号 Number：HW25010032

样品标识 Identification：CTA TA5 产品批号：317277-12

检测项目		单位	检测结果	客户指定判定依据
水分		%	**0.42**	≤5
灰分		%	**9.41**	≤14
四氯化碳吸附率		%	**62.60**	≥60
比表面积		m^2/g	**1033**	—
强度		%	**99**	≥90
着火点		° C	**528**	—
表观密度		g/mL	**0.483**	—
粒度	≤3.35mm(6 目)	%	**0.51**	≤5
以下空白				

编　　制 Reported by 吴倩　　审　　核 Checked by 梁平　　批　　准 Approved by 赵奇

检 测 报 告

报告编号：2025F-HT0023

检 测 类 别： 来样检测

委 托 单 位： 隧道空气净化国际有限公司

签 发 日 期： 2025 年 1 月 23 日

煤炭科学技术研究院有限公司

煤炭科学技术研究院有限公司检测中心

（煤炭工业节能监测中心）

注　意　事　项

1．报告无“检验检测专用章”无效。

2．检测报告不得局部复制，复制报告未重新加盖“检验检测专用章”无效。

3．报告无审核、批准人签章无效。

4．报告涂改无效。

5．对检测报告若有异议，应于签发之日起十五日内提出，逾期不予受理。

6．报告仅对本次来样的检测结果负责。

机构本部地址：北京市朝阳区和平街青年沟路 5 号

实验室地址：北京市大兴区采育镇北京采育经济开发区育隆大街 5 号

电话：010-80201200，010-80201360，010-84263572

煤炭科学技术研究院有限公司
煤炭科学技术研究院有限公司检测中心
Test Center of China Coal Research Institute
（煤炭工业节能监测中心）
（Coal Industry Energy Conservation Monitoring Center）
检测报告
Analysis Report

实验室编号	HW25010033	样品标识	CTA TA5 产品批号：317277-13
委托单位	隧道空气净化国际有限公司	委托单位地址	/
委托人	齐正革	委托人电话	17701757993
样品来源	委托人寄送	样品数量	1 件
样品状态	黑色柱状	样品接收日期	2025 年 1 月 13 日
检测日期	2025 年 1 月 13 日~2025 年 1 月 22 日	报告编制日期	2025 年 1 月 22 日
检测项目	水分 灰分 四氯化碳吸附率 比表面积 粒度 强度 着火点 表观密度	检测依据	ASTM D 2867-2023 ASTM D 2866-11(2018) ASTM D 3467-04(2020) GB/T 7702.20-2008 ASTM D 2862-16(2022) ASTM D 3802-23 ASTM D 3466-06(2018) ASTM D 2854-2009(2019)
检测结果	见本报告后续页 （检验检测专用章） 签发日期 2025 年 1 月 23 日		
备注	以上美标测试的项目均不在 CMA/CNAS 附表范围内，本报告仅作为内部质量控制、科研、教学之用。		

编　　制 Reported by　　审　　核 Checked by　　批　　准 Approved by

煤炭科学技术研究院有限公司
煤炭科学技术研究院有限公司检测中心

Test Center of China Coal Research Institute

（煤炭工业节能监测中心）

（Coal Industry Energy Conservation Monitoring Center）

检测报告

Analysis Report

（本报告只适用于来样的检测结果）

（The data sheet is only responsible for the test results of received sample）

实验室编号 Number：HW25010033

样品标识 Identification：CTA TA5 产品批号：317277-13

检测项目		单位	检测结果	客户指定判定依据
水分		%	**0.37**	≤5
灰分		%	**9.10**	≤14
四氯化碳吸附率		%	**61.56**	≥60
比表面积		m^2/g	**1040**	—
强度		%	**99**	≥90
着火点		° C	**536**	—
表观密度		g/mL	**0.479**	—
粒度	≤3.35mm(6 目)	%	**0.47**	≤5
以下空白				

编　　制 Reported by 吴倩　　审　　核 Checked by 许平　　批　　准 Approved by 赵奇

报告编号：2025F-HT0023　　第 4 页　　共 4 页

检 测 报 告

报告编号：2024F-HT0289

检 测 类 别： 来样检测

委 托 单 位： 隧道空气净化国际有限公司

签 发 日 期： 2024 年 12 月 26 日

煤炭科学技术研究院有限公司

煤炭科学技术研究院有限公司检测中心

（煤炭工业节能监测中心）

注 意 事 项

1．报告无“检验检测专用章”无效。

2．检测报告不得局部复制，复制报告未重新加盖“检验检测专用章”无效。

3．报告无审核、批准人签章无效。

4．报告涂改无效。

5．对检测报告若有异议，应于签发之日起十五日内提出，逾期不予受理。

6．报告仅对本次来样的检测结果负责。

机构本部地址：北京市朝阳区和平街青年沟路 5 号

实验室地址：北京市大兴区采育镇北京采育经济开发区育隆大街 5 号

电话：010-80201200，010-80201360，010-84263572

煤炭科学技术研究院有限公司
煤炭科学技术研究院有限公司检测中心
Test Center of China Coal Research Institute
（煤炭工业节能监测中心）
（Coal Industry Energy Conservation Monitoring Center）
检测报告
Analysis Report

实验室编号	HW24120054	样品标识	CTA TA5 产品批号：322528-1
委托单位	隧道空气净化国际有限公司	委托单位地址	/
委托人	齐正革	委托人电话	17701757993
样品来源	委托人寄送	样品数量	1 件
样品状态	黑色柱状	样品接收日期	2024 年 12 月 16 日
检测日期	2024 年 12 月 16 日~2024 年 12 月 25 日	报告编制日期	2024 年 12 月 25 日
检测项目	水分 灰分 四氯化碳吸附率 比表面积 粒度 强度 着火点 表观密度	检测依据	ASTM D 2867-2023 ASTM D 2866-11(2018) ASTM D 3467-04(2020) GB/T 7702.20-2008 ASTM D 2862-16(2022) ASTM D 3802-23 ASTM D 3466-06(2018) ASTM D 2854-2009(2019)
检测结果	见本报告后续页 （检验检测专用章） 签发日期 2024 年 12 月 26 日		
备注	以上美标测试的项目均不在 CMA/CNAS 附表范围内，本报告仅作为内部质量控制、科研、教学之用。		

编　　制 Reported by　　审　　核 Checked by　　批　　准 Approved by

煤炭科学技术研究院有限公司
煤炭科学技术研究院有限公司检测中心
Test Center of China Coal Research Institute
（煤炭工业节能监测中心）
（Coal Industry Energy Conservation Monitoring Center）
检测报告
Analysis Report
（本报告只适用于来样的检测结果）
（The data sheet is only responsible for the test results of received sample）

实验室编号 Number：HW24120054

样品标识 Identification：CTA TA5 产品批号：322528-1

检测项目		单位	检测结果	客户指定判定依据
水分		%	**0.91**	**≤5**
灰分		%	**9.15**	**≤14**
四氯化碳吸附率		%	**62.67**	**≥60**
比表面积		m^2/g	**1027**	—
强度		%	**98**	**≥90**
着火点		° C	**510**	
表观密度		g/mL	**0.485**	—
粒度	≤3.35mm(6 目)	%	**1.09**	**≤5**
以下空白				

编　　制 Reported by　　审　　核 Checked by　　批　　准 Approved by

检 测 报 告

报告编号：2024F-HT0290

检测类别：　来样检测

委托单位：　隧道空气净化国际有限公司

签发日期：　2024 年 12 月 26 日

煤炭科学技术研究院有限公司

煤炭科学技术研究院有限公司检测中心

（煤炭工业节能监测中心）

注 意 事 项

1．报告无“检验检测专用章”无效。

2．检测报告不得局部复制，复制报告未重新加盖“检验检测专用章”无效。

3．报告无审核、批准人签章无效。

4．报告涂改无效。

5．对检测报告若有异议，应于签发之日起十五日内提出，逾期不予受理。

6．报告仅对本次来样的检测结果负责。

机构本部地址：北京市朝阳区和平街青年沟路 5 号

实验室地址：北京市大兴区采育镇北京采育经济开发区育隆大街 5 号

电话：010-80201200，010-80201360，010-84263572

煤炭科学技术研究院有限公司
煤炭科学技术研究院有限公司检测中心
Test Center of China Coal Research Institute
（煤炭工业节能监测中心）
（Coal Industry Energy Conservation Monitoring Center）
检测报告
Analysis Report

实验室编号	HW24120055	样品标识	CTA TA5 产品批号：322528-2
委托单位	隧道空气净化国际有限公司	委托单位地址	/
委托人	齐正革	委托人电话	17701757993
样品来源	委托人寄送	样品数量	1 件
样品状态	黑色柱状	样品接收日期	2024 年 12 月 16 日
检测日期	2024 年 12 月 16 日~2024 年 12 月 25 日	报告编制日期	2024 年 12 月 25 日
检测项目	水分 灰分 四氯化碳吸附率 比表面积 粒度 强度 着火点 表观密度	检测依据	ASTM D 2867-2023 ASTM D 2866-11(2018) ASTM D 3467-04(2020) GB/T 7702.20-2008 ASTM D 2862-16(2022) ASTM D 3802-23 ASTM D 3466-06(2018) ASTM D 2854-2009(2019)
检测结果	见本报告后续页 （检验检测专用章） 签发日期 2024 年 12 月 26 日		
备注	以上美标测试的项目均不在 CMA/CNAS 附表范围内，本报告仅作为内部质量控制、科研、教学之用。		

编　　制 Reported by 吴倩　　审　　核 Checked by 涂叶　　批　　准 Approved by 赵奇

煤炭科学技术研究院有限公司
煤炭科学技术研究院有限公司检测中心
Test Center of China Coal Research Institute
（煤炭工业节能监测中心）
（Coal Industry Energy Conservation Monitoring Center）
检测报告
Analysis Report
（本报告只适用于来样的检测结果）
（The data sheet is only responsible for the test results of received sample）

实验室编号 Number：HW24120055

样品标识 Identification：CTA TA5 产品批号：322528-2

检测项目		单位	检测结果	客户指定判定依据
水分		%	**0.78**	**≤5**
灰分		%	**9.01**	**≤14**
四氯化碳吸附率		%	**63.20**	**≥60**
比表面积		m^2/g	**1034**	—
强度		%	**98**	**≥90**
着火点		° C	**514**	—
表观密度		g/mL	**0.482**	—
粒度	≤3.35mm(6 目)	%	**1.21**	**≤5**
以下空白				

编　　制 Reported by 吴倩　　审　　核 Checked by 泽坤　　批　　准 Approved by 赵奇

检 测 报 告

报告编号：2025F-HT0004

检 测 类 别： 来样检测

委 托 单 位： 隧道空气净化国际有限公司

签 发 日 期： 2025 年 1 月 8 日

煤炭科学技术研究院有限公司

煤炭科学技术研究院有限公司检测中心

（煤炭工业节能监测中心）

注 意 事 项

1．报告无“检验检测专用章”无效。

2．检测报告不得局部复制，复制报告未重新加盖“检验检测专用章”无效。

3．报告无审核、批准人签章无效。

4．报告涂改无效。

5．对检测报告若有异议，应于签发之日起十五日内提出，逾期不予受理。

6．报告仅对本次来样的检测结果负责。

机构本部地址：北京市朝阳区和平街青年沟路 5 号

实验室地址：北京市大兴区采育镇北京采育经济开发区育隆大街 5 号

电话：010-80201200，010-80201360，010-84263572

煤炭科学技术研究院有限公司
煤炭科学技术研究院有限公司检测中心
Test Center of China Coal Research Institute
（煤炭工业节能监测中心）
（Coal Industry Energy Conservation Monitoring Center）
检测报告
Analysis Report

实验室编号	HW24120097	样品标识	CTA TA5 产品批号：322528-3
委托单位	隧道空气净化国际有限公司	委托单位地址	/
委托人	齐正革	委托人电话	17701757993
样品来源	委托人寄送	样品数量	1 件
样品状态	黑色柱状	样品接收日期	2024 年 12 月 24 日
检测日期	2024 年 12 月 24 日~2025 年 1 月 6 日	报告编制日期	2025 年 1 月 6 日
检测项目	水分 灰分 四氯化碳吸附率 比表面积 粒度 强度 着火点 表观密度	检测依据	ASTM D 2867-2023 ASTM D 2866-11(2018) ASTM D 3467-04(2020) GB/T 7702.20-2008 ASTM D 2862-16(2022) ASTM D 3802-23 ASTM D 3466-06(2018) ASTM D 2854-2009(2019)
检测结果	见本报告后续页 （检验检测专用章） 签发日期 2025 年 1 月 8 日		
备注	以上美标测试的项目均不在 CMA/CNAS 附表范围内，本报告仅作为内部质量控制、科研、教学之用。		

编　　制 Reported by　　审　　核 Checked by　　批　　准 Approved by

煤炭科学技术研究院有限公司
煤炭科学技术研究院有限公司检测中心
Test Center of China Coal Research Institute
（煤炭工业节能监测中心）
（Coal Industry Energy Conservation Monitoring Center）
检测报告
Analysis Report
（本报告只适用于来样的检测结果）
（The data sheet is only responsible for the test results of received sample）

实验室编号 Number：HW24120097

样品标识 Identification：CTA TA5 产品批号：322528-3

检测项目		单位	检测结果	客户指定判定依据
水分		%	**0.72**	**≤5**
灰分		%	**10.27**	**≤14**
四氯化碳吸附率		%	**62.40**	**≥60**
比表面积		m^2/g	**1039**	—
强度		%	**98**	**≥90**
着火点		° C	**534**	—
表观密度		g/mL	**0.479**	—
粒度	≤3.35mm(6 目)	%	**1.04**	**≤5**
以下空白				

编　　制 Reported by　　审　　核 Checked by　　批　　准 Approved by

检 测 报 告

报告编号：2025F-HT0005

检 测 类 别： 来样检测

委 托 单 位： 隧道空气净化国际有限公司

签 发 日 期： 2025 年 1 月 8 日

煤炭科学技术研究院有限公司

煤炭科学技术研究院有限公司检测中心

（煤炭工业节能监测中心）

注 意 事 项

1．报告无“检验检测专用章”无效。

2．检测报告不得局部复制，复制报告未重新加盖“检验检测专用章”无效。

3．报告无审核、批准人签章无效。

4．报告涂改无效。

5．对检测报告若有异议，应于签发之日起十五日内提出，逾期不予受理。

6．报告仅对本次来样的检测结果负责。

机构本部地址：北京市朝阳区和平街青年沟路 5 号

实验室地址：北京市大兴区采育镇北京采育经济开发区育隆大街 5 号

电话：010-80201200，010-80201360，010-84263572

煤炭科学技术研究院有限公司
煤炭科学技术研究院有限公司检测中心
Test Center of China Coal Research Institute
（煤炭工业节能监测中心）
（Coal Industry Energy Conservation Monitoring Center）
检测报告
Analysis Report

实验室编号	HW24120098	样品标识	CTA TA5 产品批号：322528-4
委托单位	隧道空气净化国际有限公司	委托单位地址	/
委托人	齐正革	委托人电话	17701757993
样品来源	委托人寄送	样品数量	1 件
样品状态	黑色柱状	样品接收日期	2024 年 12 月 24 日
检测日期	2024 年 12 月 24 日~2025 年 1 月 6 日	报告编制日期	2025 年 1 月 6 日
检测项目	水分 灰分 四氯化碳吸附率 比表面积 粒度 强度 着火点 表观密度	检测依据	ASTM D 2867-2023 ASTM D 2866-11(2018) ASTM D 3467-04(2020) GB/T 7702.20-2008 ASTM D 2862-16(2022) ASTM D 3802-23 ASTM D 3466-06(2018) ASTM D 2854-2009(2019)
检测结果	见本报告后续页 （检验检测专用章） 签发日期 2025 年 1 月 8 日		
备注	以上美标测试的项目均不在 CMA/CNAS 附表范围内，本报告仅作为内部质量控制、科研、教学之用。		

编　　制 Reported by 吴倩　　审　　核 Checked by 冯平　　批　　准 Approved by 赵奇

煤炭科学技术研究院有限公司
煤炭科学技术研究院有限公司检测中心

Test Center of China Coal Research Institute

（煤炭工业节能监测中心）

（Coal Industry Energy Conservation Monitoring Center）

检测报告

Analysis Report

（本报告只适用于来样的检测结果）

（The data sheet is only responsible for the test results of received sample）

实验室编号 Number：HW24120098

样品标识 Identification：CTA TA5 产品批号：322528-4

检测项目		单位	检测结果	客户指定判定依据
水分		%	**0.92**	≤5
灰分		%	**10.54**	≤14
四氯化碳吸附率		%	**60.72**	≥60
比表面积		m^2/g	**1033**	—
强度		%	**98**	≥90
着火点		° C	**538**	—
表观密度		g/mL	**0.476**	—
粒度	≤3.35mm(6 目)	%	**0.96**	≤5
以下空白				

编　　制 Reported by　　审　　核 Checked by　　批　　准 Approved by

检 测 报 告

报告编号：2025F-HT0006

检 测 类 别： 来样检测

委 托 单 位： 隧道空气净化国际有限公司

签 发 日 期： 2025 年 1 月 8 日

煤炭科学技术研究院有限公司

煤炭科学技术研究院有限公司检测中心

（煤炭工业节能监测中心）

注 意 事 项

1．报告无“检验检测专用章”无效。

2．检测报告不得局部复制，复制报告未重新加盖“检验检测专用章”无效。

3．报告无审核、批准人签章无效。

4．报告涂改无效。

5．对检测报告若有异议，应于签发之日起十五日内提出，逾期不予受理。

6．报告仅对本次来样的检测结果负责。

机构本部地址：北京市朝阳区和平街青年沟路 5 号

实验室地址：北京市大兴区采育镇北京采育经济开发区育隆大街 5 号

电话：010-80201200，010-80201360，010-84263572

煤炭科学技术研究院有限公司
煤炭科学技术研究院有限公司检测中心
Test Center of China Coal Research Institute
（煤炭工业节能监测中心）
（Coal Industry Energy Conservation Monitoring Center）
检测报告
Analysis Report

实验室编号	HW24120099	样品标识	CTA TA5 产品批号：322528-5
委托单位	隧道空气净化国际有限公司	委托单位地址	/
委托人	齐正革	委托人电话	17701757993
样品来源	委托人寄送	样品数量	1 件
样品状态	黑色柱状	样品接收日期	2024 年 12 月 24 日
检测日期	2024 年 12 月 24 日~2025 年 1 月 6 日	报告编制日期	2025 年 1 月 6 日
检测项目	水分 灰分 四氯化碳吸附率 比表面积 粒度 强度 着火点 表观密度	检测依据	ASTM D 2867-2023 ASTM D 2866-11(2018) ASTM D 3467-04(2020) GB/T 7702.20-2008 ASTM D 2862-16(2022) ASTM D 3802-23 ASTM D 3466-06(2018) ASTM D 2854-2009(2019)
检测结果	见本报告后续页 （检验检测专用章） 签发日期 2025 年 1 月 8 日		
备注	以上美标测试的项目均不在 CMA/CNAS 附表范围内，本报告仅作为内部质量控制、科研、教学之用。		

编　　制 Reported by　　审　　核 Checked by　　批　　准 Approved by

煤炭科学技术研究院有限公司
煤炭科学技术研究院有限公司检测中心
Test Center of China Coal Research Institute
（煤炭工业节能监测中心）
（Coal Industry Energy Conservation Monitoring Center）
检测报告
Analysis Report
（本报告只适用于来样的检测结果）
（The data sheet is only responsible for the test results of received sample）

实验室编号 Number：HW24120099

样品标识 Identification：CTA TA5 产品批号：322528-5

检测项目		单位	检测结果	客户指定判定依据
水分		%	**0.79**	**≤5**
灰分		%	**9.92**	**≤14**
四氯化碳吸附率		%	**65.57**	**≥60**
比表面积		m^2/g	**1029**	—
强度		%	**98**	**≥90**
着火点		° C	**533**	—
表观密度		g/mL	**0.471**	—
粒度	≤3.35mm(6 目)	%	**1.14**	**≤5**
以下空白				

编　　制 Reported by　　审　　核 Checked by　　批　　准 Approved by

检 测 报 告

报告编号：2025F-HT0007

检 测 类 别： 来样检测

委 托 单 位： 隧道空气净化国际有限公司

签 发 日 期： 2025 年 1 月 8 日

煤炭科学技术研究院有限公司

煤炭科学技术研究院有限公司检测中心

（煤炭工业节能监测中心）

注 意 事 项

1．报告无“检验检测专用章”无效。

2．检测报告不得局部复制，复制报告未重新加盖“检验检测专用章”无效。

3．报告无审核、批准人签章无效。

4．报告涂改无效。

5．对检测报告若有异议，应于签发之日起十五日内提出，逾期不予受理。

6．报告仅对本次来样的检测结果负责。

机构本部地址：北京市朝阳区和平街青年沟路 5 号

实验室地址：北京市大兴区采育镇北京采育经济开发区育隆大街 5 号

电话：010-80201200，010-80201360，010-84263572

煤炭科学技术研究院有限公司
煤炭科学技术研究院有限公司检测中心
Test Center of China Coal Research Institute
（煤炭工业节能监测中心）
（Coal Industry Energy Conservation Monitoring Center）
检测报告
Analysis Report

实验室编号	HW24120100	样品标识	CTA TA5 产品批号：322528-6
委托单位	隧道空气净化国际有限公司	委托单位地址	/
委托人	齐正革	委托人电话	17701757993
样品来源	委托人寄送	样品数量	1 件
样品状态	黑色柱状	样品接收日期	2024 年 12 月 24 日
检测日期	2024 年 12 月 24 日~2025 年 1 月 6 日	报告编制日期	2025 年 1 月 6 日
检测项目	水分 灰分 四氯化碳吸附率 比表面积 粒度 强度 着火点 表观密度	检测依据	ASTM D 2867-2023 ASTM D 2866-11(2018) ASTM D 3467-04(2020) GB/T 7702.20-2008 ASTM D 2862-16(2022) ASTM D 3802-23 ASTM D 3466-06(2018) ASTM D 2854-2009(2019)
检测结果	见本报告后续页 （检验检测专用章） 签发日期：2025 年 1 月 8 日		
备注	以上美标测试的项目均不在 CMA/CNAS 附表范围内，本报告仅作为内部质量控制、科研、教学之用。		

编　　制 Reported by　　审　　核 Checked by　　批　　准 Approved by

煤炭科学技术研究院有限公司
煤炭科学技术研究院有限公司检测中心
Test Center of China Coal Research Institute
（煤炭工业节能监测中心）
（Coal Industry Energy Conservation Monitoring Center）
检测报告
Analysis Report
（本报告只适用于来样的检测结果）
（The data sheet is only responsible for the test results of received sample）

实验室编号 Number：HW24120100

样品标识 Identification：CTA TA5 产品批号：322528-6

检测项目		单位	检测结果	客户指定判定依据
水分		%	**0.86**	**≤5**
灰分		%	**9.66**	**≤14**
四氯化碳吸附率		%	**64.98**	**≥60**
比表面积		m^2/g	**1028**	—
强度		%	**98**	**≥90**
着火点		° C	**541**	—
表观密度		g/mL	**0.477**	—
粒度	≤3.35mm(6 目)	%	**1.03**	**≤5**
以下空白				

编　　制 Reported by　　审　　核 Checked by　　批　　准 Approved by

检 测 报 告

报告编号：2025F-HT0008

检 测 类 别： 来样检测

委 托 单 位： 隧道空气净化国际有限公司

签 发 日 期： 2025 年 1 月 9 日

煤炭科学技术研究院有限公司

煤炭科学技术研究院有限公司检测中心

（煤炭工业节能监测中心）

注 意 事 项

1．报告无“检验检测专用章”无效。

2．检测报告不得局部复制，复制报告未重新加盖“检验检测专用章”无效。

3．报告无审核、批准人签章无效。

4．报告涂改无效。

5．对检测报告若有异议，应于签发之日起十五日内提出，逾期不予受理。

6．报告仅对本次来样的检测结果负责。

机构本部地址：北京市朝阳区和平街青年沟路 5 号

实验室地址：北京市大兴区采育镇北京采育经济开发区育隆大街 5 号

电话：010-80201200，010-80201360，010-84263572

煤炭科学技术研究院有限公司
煤炭科学技术研究院有限公司检测中心
Test Center of China Coal Research Institute
（煤炭工业节能监测中心）
（Coal Industry Energy Conservation Monitoring Center）
检测报告
Analysis Report

实验室编号	HW24120105	样品标识	CTA TA5 产品批号：322528-7
委托单位	隧道空气净化国际有限公司	委托单位地址	/
委托人	齐正革	委托人电话	17701757993
样品来源	委托人寄送	样品数量	1 件
样品状态	黑色柱状	样品接收日期	2024 年 12 月 25 日
检测日期	2024 年 12 月 25 日~2025 年 1 月 9 日	报告编制日期	2025 年 1 月 9 日
检测项目	水分 灰分 四氯化碳吸附率 比表面积 粒度 强度 着火点 表观密度	检测依据	ASTM D 2867-2023 ASTM D 2866-11(2018) ASTM D 3467-04(2020) GB/T 7702.20-2008 ASTM D 2862-16(2022) ASTM D 3802-23 ASTM D 3466-06(2018) ASTM D 2854-2009(2019)
检测结果	见本报告后续页 （检验检测专用章） 签发日期 2025 年 1 月 9 日		
备注	以上美标测试的项目均不在 CMA/CNAS 附表范围内，本报告仅作为内部质量控制、科研、教学之用。		

编　　制 Reported by 吴倩　　审　　核 Checked by 淳平　　批　　准 Approved by 赵奇

煤炭科学技术研究院有限公司
煤炭科学技术研究院有限公司检测中心
Test Center of China Coal Research Institute
（煤炭工业节能监测中心）
（Coal Industry Energy Conservation Monitoring Center）
检测报告
Analysis Report
（本报告只适用于来样的检测结果）
（The data sheet is only responsible for the test results of received sample）

实验室编号 Number：HW24120105

样品标识 Identification：CTA TA5 产品批号：322528-7

检测项目		单位	检测结果	客户指定判定依据
水分		%	**0.81**	≤5
灰分		%	**9.79**	≤14
四氯化碳吸附率		%	**63.41**	≥60
比表面积		m^2/g	**1038**	—
强度		%	**99**	≥90
着火点		℃	**538**	—
表观密度		g/mL	**0.478**	—
粒度	≤3.35mm(6 目)	%	**0.50**	≤5
以下空白				

编　　制 Reported by　　审　　核 Checked by　　批　　准 Approved by

检 测 报 告

报告编号：2025F-HT0009

检测类别：来样检测

委托单位：隧道空气净化国际有限公司

签发日期：2025 年 1 月 9 日

煤炭科学技术研究院有限公司

煤炭科学技术研究院有限公司检测中心

（煤炭工业节能监测中心）

注 意 事 项

1．报告无“检验检测专用章”无效。

2．检测报告不得局部复制，复制报告未重新加盖“检验检测专用章”无效。

3．报告无审核、批准人签章无效。

4．报告涂改无效。

5．对检测报告若有异议，应于签发之日起十五日内提出，逾期不予受理。

6．报告仅对本次来样的检测结果负责。

机构本部地址：北京市朝阳区和平街青年沟路 5 号

实验室地址：北京市大兴区采育镇北京采育经济开发区育隆大街 5 号

电话：010-80201200，010-80201360，010-84263572

煤炭科学技术研究院有限公司
煤炭科学技术研究院有限公司检测中心
Test Center of China Coal Research Institute
（煤炭工业节能监测中心）
（Coal Industry Energy Conservation Monitoring Center）
检测报告
Analysis Report

实验室编号	HW24120106	样品标识	CTA TA5 产品批号：322528-8
委托单位	隧道空气净化国际有限公司	委托单位地址	/
委托人	齐正革	委托人电话	17701757993
样品来源	委托人寄送	样品数量	1 件
样品状态	黑色柱状	样品接收日期	2024 年 12 月 25 日
检测日期	2024 年 12 月 25 日~2025 年 1 月 9 日	报告编制日期	2025 年 1 月 9 日
检测项目	水分 灰分 四氯化碳吸附率 比表面积 粒度 强度 着火点 表观密度	检测依据	ASTM D 2867-2023 ASTM D 2866-11(2018) ASTM D 3467-04(2020) GB/T 7702.20-2008 ASTM D 2862-16(2022) ASTM D 3802-23 ASTM D 3466-06(2018) ASTM D 2854-2009(2019)
检测结果	见本报告后续页 （检验检测专用章） 签发日期 2025 年 1 月 9 日		
备注	以上美标测试的项目均不在 CMA/CNAS 附表范围内，本报告仅作为内部质量控制、科研、教学之用。		

编　　制 Reported by 吴倩　　审　　核 Checked by 冯平　　批　　准 Approved by 赵奇

煤炭科学技术研究院有限公司
煤炭科学技术研究院有限公司检测中心

Test Center of China Coal Research Institute

（煤炭工业节能监测中心）

（Coal Industry Energy Conservation Monitoring Center）

检测报告

Analysis Report

（本报告只适用于来样的检测结果）

（The data sheet is only responsible for the test results of received sample）

实验室编号 Number：HW24120106

样品标识 Identification：CTA TA5 产品批号：322528-8

检测项目		单位	检测结果	客户指定判定依据
水分		%	**0.80**	**≤5**
灰分		%	**9.62**	**≤14**
四氯化碳吸附率		%	**64.64**	**≥60**
比表面积		m^2/g	**1030**	—
强度		%	**99**	**≥90**
着火点		℃	**535**	—
表观密度		g/mL	**0.473**	—
粒度	≤3.35mm(6 目)	%	**0.63**	**≤5**
以下空白				

编　　制 Reported by 吴倩　　审　　核 Checked by 许平　　批　　准 Approved by 赵奇

检 测 报 告

报告编号：2025F-HT0010

检测类别：来样检测

委托单位：隧道空气净化国际有限公司

签发日期：2025 年 1 月 9 日

煤炭科学技术研究院有限公司

煤炭科学技术研究院有限公司检测中心

（煤炭工业节能监测中心）

注 意 事 项

1．报告无“检验检测专用章”无效。

2．检测报告不得局部复制，复制报告未重新加盖“检验检测专用章”无效。

3．报告无审核、批准人签章无效。

4．报告涂改无效。

5．对检测报告若有异议，应于签发之日起十五日内提出，逾期不予受理。

6．报告仅对本次来样的检测结果负责。

机构本部地址：北京市朝阳区和平街青年沟路 5 号

实验室地址：北京市大兴区采育镇北京采育经济开发区育隆大街 5 号

电话：010-80201200，010-80201360，010-84263572

煤炭科学技术研究院有限公司
煤炭科学技术研究院有限公司检测中心
Test Center of China Coal Research Institute
（煤炭工业节能监测中心）
（Coal Industry Energy Conservation Monitoring Center）
检测报告
Analysis Report

实验室编号	HW24120107	样品标识	CTA TA5 产品批号：322528-9
委托单位	隧道空气净化国际有限公司	委托单位地址	/
委托人	齐正革	委托人电话	17701757993
样品来源	委托人寄送	样品数量	1 件
样品状态	黑色柱状	样品接收日期	2024 年 12 月 25 日
检测日期	2024 年 12 月 25 日~2025 年 1 月 9 日	报告编制日期	2025 年 1 月 9 日
检测项目	水分 灰分 四氯化碳吸附率 比表面积 粒度 强度 着火点 表观密度	检测依据	ASTM D 2867-2023 ASTM D 2866-11(2018) ASTM D 3467-04(2020) GB/T 7702.20-2008 ASTM D 2862-16(2022) ASTM D 3802-23 ASTM D 3466-06(2018) ASTM D 2854-2009(2019)
检测结果	见本报告后续页 （检验检测专用章） 签发日期 2025 年 1 月 9 日		
备注	以上美标测试的项目均不在 CMA/CNAS 附表范围内，本报告仅作为内部质量控制、科研、教学之用。		

编　　制 Reported by 吴倩　　审　　核 Checked by 陈平　　批　　准 Approved by 赵奇

煤炭科学技术研究院有限公司
煤炭科学技术研究院有限公司检测中心

Test Center of China Coal Research Institute

（煤炭工业节能监测中心）

（Coal Industry Energy Conservation Monitoring Center）

检测报告

Analysis Report

（本报告只适用于来样的检测结果）

（The data sheet is only responsible for the test results of received sample）

实验室编号 Number：HW24120107

样品标识 Identification：CTA TA5 产品批号：322528-9

检测项目		单位	检测结果	客户指定判定依据
水分		%	**0.82**	**≤5**
灰分		%	**9.58**	**≤14**
四氯化碳吸附率		%	**62.15**	**≥60**
比表面积		m^2/g	**1025**	—
强度		%	**98**	**≥90**
着火点		℃	**526**	—
表观密度		g/mL	**0.477**	—
粒度	≤3.35mm(6 目)	%	**0.46**	**≤5**
以下空白				

编　　制 Reported by　　审　　核 Checked by　　批　　准 Approved by

Appendix C – Site Acceptance Test (SAT) Reports for ESP Filter

Appendix C1 – Site Acceptance Test (SAT) Reports for YVB ESP Filters

Gammon

CTA INTERNATIONAL AS

AIR PURIFICATION SYSTEM (APS)
ESP FILTER ELECTRICAL TEST INSPECTION CHECK FORM

T&C for ESP Filter

Project: Contract No. HY/2019/13 Central Kowloon Route - Buildings, Electrical and Mechanical Works

RISC NO.: RISC-SI-D30091

Date: 2025/02/28

APS Sub-System : ESP Filter System *

Room Name : Plenum 1

Sub-assembly : ESP filter

Location: YVB / HVB/ KVB *

T&C Plan Ref. No.: J3883-TVS-S-06866

Reference drawing: J3883/MEP/APS/1603&1604&1605

Electrical Test - Continuity Test

A.Test instruments

Type	Model	Serial No. of Instrument	Calibration Certificated No.	Date of Calibration
Digital Ohm Micrometer	UT620C+	C242021984	AC2202502220127	22/02/2025

B. Commissioning Tests

APS Plenum 1 ESP Sub-assembly: 1

Item	Test Conductor	P1 (IONIZER)	P2 (IONIZER)	P3 (IONIZER)
1	P4 (IONIZER)	0.14	N.A.	N.A.
2	P5 (IONIZER)	N.A.	0.05	N.A.
3	P6 (IONIZER)	N.A.	N.A.	0.25
4	P7 (IONIZER)	0.08	N.A.	N.A.
5	P8 (IONIZER)	N.A.	0.12	N.A.
6	P9 (IONIZER)	N.A.	N.A.	0.07
7	P10 (IONIZER)	0.07	N.A.	N.A.
8	P11 (IONIZER)	N.A.	0.09	N.A.
9	P12 (IONIZER)	N.A.	N.A.	0.08
10	P13 (IONIZER)	0.07	N.A.	N.A.
11	P14 (IONIZER)	N.A.	0.28	N.A.
12	P15 (IONIZER)	N.A.	N.A.	0.13
13	P16 (IONIZER)	0.12	N.A.	N.A.
14	P17 (IONIZER)	N.A.	0.34	N.A.
15	P18 (IONIZER)	N.A.	N.A.	0.13

According to the manufacture's QC report, the resistance of each ESP cell collector or ionizer (from collector/ionizer plate to busbar terminal) should be less than 0.5 ohm, and the APS ESP busbar resistance should be less than or equal to 0.1 ohm. The total passing resistance for ionizer / collector would be the sum of the resistance of two cells (2 cell * 0.5 ohm) and the resistance of the busbar (0.1 ohm).
Therefore, the passing criteria of ionizer /collector continuity test is under 1.1 ohm.
The passing criteria between frame plate /collector earth plate and earth is under 0.6 ohm.

C. Comment

Tested / Checked by: (Name of CTA Representative)	Name: Ho Tung	Signature: Ho Tung	Date: 2025/02/28
Witnessed by: (Name of JEC Representative)	Name: John Chan	Signature:	Date: 2025/02/28
Witnessed by: (Name of GCL	Name: Raymond Lau	Signature:	Date: 2025/02/28
Witnessed by: (Name of AMNSL	Name: Sam Lau	Signature:	Date: 2025/02/28
Witnessed by: (Name of ZMSD	Name: WONG Cheong Shing CIE/TSC/1	Signature:	Date: 2025/02/28
Witnessed by: (Name of	Name:	Signature:	Date:

Gammon

CTA INTERNATIONAL AS

AIR PURIFICATION SYSTEM (APS)
ESP FILTER ELECTRICAL TEST INSPECTION CHECK FORM

T&C for ESP Filter

Project: Contract No. HY/2019/13 Central Kowloon Route - Buildings, Electrical and Mechanical Works

RISC NO.: RISC_SI_030091

Date: 2025/02/28

APS Sub-System : ESP Filter System *

Room Name : Plenum 1

Sub-assembly : ESP Filter

Location: YVB/ HVB/ KVB *

T&C Plan Ref. No.: ~~J3883/MM~~ J3883-TVS-S-06866

Reference drawing: J3883/MEP/APS/1603&1604&1605

Electrical Test - Continuity Test

A. Test instruments

Type	Model	Serial No. of Instrument	Calibration Certificated No.	Date of Calibration
Digital Ohm Micrometer	UT620C+	C242021984	A2202502220127	22/02/2025

B. Commissioning Tests

APS Plenum 1 ESP Sub-assembly: 1

Item	Test Conductor	P19 (COLLECTOR)
1	P20 (COLLECTOR)	0.26
2	P21 (COLLECTOR)	0.32
3	P22 (COLLECTOR)	0.2
4	P23 (COLLECTOR)	0.2
5	P24 (COLLECTOR)	0.05
6	P25 (COLLECTOR)	0.16
7	P26 (COLLECTOR)	0.08
8	P27 (COLLECTOR)	0.04
9	P28 (COLLECTOR)	0.07
10	P29 (COLLECTOR)	0.27
11	P30 (COLLECTOR)	0.29
12	P31 (COLLECTOR)	0.17
13	P32 (COLLECTOR)	0.17
14	P33 (COLLECTOR)	0.48
15	P34 (COLLECTOR)	0.03
16	P35 (COLLECTOR)	0.01
17	P36 (COLLECTOR)	0.07

Item	Test Conductor	P37 (COLLECTOR EARTH)
18	P38 (COLLECTOR EARTH)	0.01
19	P39 (COLLECTOR EARTH)	0.01
20	P40 (COLLECTOR EARTH)	0.01
21	P41 (COLLECTOR EARTH)	0.01
22	P42 (COLLECTOR EARTH)	0.01
23	P43 (COLLECTOR EARTH)	0.01
24	P44 (COLLECTOR EARTH)	0.01
25	P45 (COLLECTOR EARTH)	0.01
26	P46 (COLLECTOR EARTH)	0.01
27	P47 (COLLECTOR EARTH)	0.01
28	P48 (COLLECTOR EARTH)	0.01
29	P49 (COLLECTOR EARTH)	0.01
30	P50 (COLLECTOR EARTH)	0.01
31	P51 (COLLECTOR EARTH)	0.01
32	P52 (COLLECTOR EARTH)	0.01
33	P53 (COLLECTOR EARTH)	0.01
34	P54 (COLLECTOR EARTH)	0.01
35	P55 (FRAME)	0.01
36	EARTH	0.01

According to the manufacture's QC report, the resistance of each ESP cell collector or ionizer (from collector/ionizer plate to busbar terminal) should be less than 0.5 ohm, and the APS ESP busbar resistance should be less than or equal to 0.1 ohm. The total passing resistance for ionizer / collector would be the sum of the resistance of two cells (2 cell * 0.5 ohm) and the resistance of the busbar (0.1 ohm). Therefore, the passing criteria of ionizer /collector continuity test is under 1.1 ohm.
The passing criteria between frame plate /collector earth plate and earth is under 0.5 ohm.

C. Comment

Tested / Checked by: (Name of CTA Representative)	Name: Ho Tung	Signature: Ho Tung	Date: 2025/02/28
Witnessed by: (Name of JEC Representative)	Name: John Chan	Signature:	Date: 2025/02/28
Witnessed by: (Name of GCL)	Name: Raymond Lam	Signature:	Date: 2025/02/28
Witnessed by: (Name of AMMJV)	Name: Sam Li	Signature:	Date: 2025/02/28
Witnessed by: (Name of EMSD)	Name: WONG Cheong Shing CIE/TSC/1	Signature:	Date: 2025/02/28
Witnessed by: (Name of)	Name:	Signature:	Date:

Gammon

CTA INTERNATIONAL AS

T&C for ESP Filter

AIR PURIFICATION SYSTEM (APS)
ESP FILTER ELECTRICAL TEST INSPECTION CHECK FORM

Project: Contract No. HY/2019/13 Central Kowloon Route - Buildings, Electrical and Mechanical Works

RISC NO.: R1SC-ST-030091

Date: 2025/02/28

APS Sub-System : ESP Filter System *

Room Name : Plenum 1

Sub-assembly : ESP filter

Location: YVB / HVB/ KVB *

T&C Plan Ref. No.: J3883-TV3-S-06866

Reference drawing: J3883/MEP/APS/1603&1604&1605

Electrical Test - Continuity Test

A.Test instruments

Type	Model	Serial No. of Instrument	Calibration Certificated No.	Date of Calibration
Digital Ohm Micrometer	UT620C+	C242421984	AC2202502220127	22/02/2025

B. Commissioning Tests

APS Plenum 1 ESP Sub-assembly: 2

Item	Test Conductor	P1 (IONIZER)	P2 (IONIZER)	P3 (IONIZER)
1	P4 (IONIZER)	0.15	N.A.	N.A.
2	P5 (IONIZER)	N.A.	0.23	N.A.
3	P6 (IONIZER)	N.A.	N.A.	0.12
4	P7 (IONIZER)	0.08	N.A.	N.A.
5	P8 (IONIZER)	N.A.	0.12	N.A.
6	P9 (IONIZER)	N.A.	N.A.	0.07
7	P10 (IONIZER)	0.13	N.A.	N.A.
8	P11 (IONIZER)	N.A.	0.11	N.A.
9	P12 (IONIZER)	N.A.	N.A.	0.12
10	P13 (IONIZER)	0.18	N.A.	N.A.
11	P14 (IONIZER)	N.A.	0.09	N.A.
12	P15 (IONIZER)	N.A.	N.A.	0.12
13	P16 (IONIZER)	0.13	N.A.	N.A.
14	P17 (IONIZER)	N.A.	0.13	N.A.
15	P18 (IONIZER)	N.A.	N.A.	0.08

According to the manufacture's QC report, the resistance of each ESP cell collector or ionizer (from collector/ionizer plate to busbar terminal) should be less than 0.5 ohm, and the APS ESP busbar resistance should be less than or equal to 0.1 ohm. The total passing resistance for ionizer / collector would be the sum of the resistance of two cells (2 cell * 0.5 ohm) and the resistance of the busbar (0.1 ohm)
Therefore, the passing criteria of ionizer /collector continuity test is under 1.1 ohm
The passing criteria between frame plate /collector earth plate and earth is under 0.6 ohm.

C. Comment

Tested / Checked by: (Name of CTA Representative)	Name: Ho Tung	Signature: Ho Tung	Date: 2025/02/28
Witnessed by: (Name of JEC Representative)	Name: John Chan	Signature:	Date: 2025/02/28
Witnessed by: (Name of GCL)	Name: Raymond Lam	Signature:	Date: 2025/02/28
Witnessed by: (Name of AMMJV)	Name: Sam Lui	Signature:	Date: 2025/02/28
Witnessed by: (Name of ZMSD)	Name: WONG Cheong Shing CIE/TSC/1	Signature:	Date: 2025/02/28
Witnessed by: (Name of	Name:	Signature:	Date:

Gammon

CTA INTERNATIONAL AS

AIR PURIFICATION SYSTEM (APS)

T&C for ESP Filter

ESP FILTER ELECTRICAL TEST INSPECTION CHECK FORM

Project: Contract No. HY/2019/13 Central Kowloon Route - Buildings, Electrical and Mechanical Works

RISC NO.: RISC-ST-030091

Date: 2025/02/28

APS Sub-System : ESP Filter System *

Room Name : Plenum 1

Sub-assembly : ESP filter

Location: YVB / HVB/ KVB *

T&C Plan Ref. No.: J3883-TVS-S-0686

Reference drawing: J3883/MEP/APS/1603&1604&1605

Electrical Test - Continuity Test

A. Test instruments

Type	Model	Serial No. of Instrument	Calibration Certificated No.	Date of Calibration
Digital Ohm Micrometer	UT620C+	C242021984	AC2202502220127	22/02/2025

B. Commissioning Tests

APS Plenum 1 ESP Sub-assembly: 2

Item	Test Conductor	P19 (COLLECTOR)
1	P20 (COLLECTOR)	0.08
2	P21 (COLLECTOR)	0.08
3	P22 (COLLECTOR)	0.08
4	P23 (COLLECTOR)	0.08
5	P24 (COLLECTOR)	0.09
6	P25 (COLLECTOR)	0.09
7	P26 (COLLECTOR)	0.1
8	P27 (COLLECTOR)	0.1
9	P28 (COLLECTOR)	0.1
10	P29 (COLLECTOR)	0.1
11	P30 (COLLECTOR)	0.1
12	P31 (COLLECTOR)	0.07
13	P32 (COLLECTOR)	0.1
14	P33 (COLLECTOR)	0.07
15	P34 (COLLECTOR)	0.2
16	P35 (COLLECTOR)	0.2
17	P36 (COLLECTOR)	0.2

Item	Test Conductor	P37 (COLLECTOR EARTH)
18	P38 (COLLECTOR EARTH)	0.01
19	P39 (COLLECTOR EARTH)	0.01
20	P40 (COLLECTOR EARTH)	0.01
21	P41 (COLLECTOR EARTH)	0.01
22	P42 (COLLECTOR EARTH)	0.01
23	P43 (COLLECTOR EARTH)	0.01
24	P44 (COLLECTOR EARTH)	0.01
25	P45 (COLLECTOR EARTH)	0.01
26	P46 (COLLECTOR EARTH)	0.01
27	P47 (COLLECTOR EARTH)	0.01
28	P48 (COLLECTOR EARTH)	0.01
29	P49 (COLLECTOR EARTH)	0.01
30	P50 (COLLECTOR EARTH)	0.01
31	P51 (COLLECTOR EARTH)	0.01
32	P52 (COLLECTOR EARTH)	0.01
33	P53 (COLLECTOR EARTH)	0.01
34	P54 (COLLECTOR EARTH)	0.01
35	P55 (FRAME)	0.01
36	EARTH	0.01

According to the manufacture's QC report, the resistance of each ESP cell collector or ionizer (from collector/ionizer plate to busbar terminal) should be less than 0.5 ohm, and the APS ESP busbar resistance should be less than or equal to 0.1 ohm. The total passing resistance for ionizer / collector would be the sum of the resistance of two cells (2 cell * 0.5 ohm) and the resistance of the busbar (0.1 ohm). Therefore, the passing criteria of ionizer /collector continuity test is under 1.1 ohm.
The passing criteria between frame plate /collector earth plate and earth is under 0.5 ohm.

C. Comment

Tested / Checked by: (Name of CTA Representative)	Name: Ho Tung	Signature: Ho Tung	Date: 2025/02/28
Witnessed by: (Name of JEC Representative)	Name: John Chan	Signature:	Date: 2025/02/28
Witnessed by: (Name of GCL)	Name: Raymond Lau	Signature:	Date: 2025/02/28
Witnessed by: (Name of AMMJV)	Name: Sam Lui	Signature:	Date: 2025/02/28
Witnessed by: (Name of ZMSD)	Name: WONG Cheong Shing CIE/TSC/1	Signature:	Date: 2025/02/28
Witnessed by: (Name of)	Name:	Signature:	Date:

Gammon

CTA INTERNATIONAL AS

T&C for ESP Filter

AIR PURIFICATION SYSTEM (APS)
ESP FILTER ELECTRICAL TEST INSPECTION CHECK FORM

Project: Contract No. HY/2019/13 Central Kowloon Route - Buildings, Electrical and Mechanical Works

RISC NO.: RISC-SI-030091

Date: 2025/02/29

APS Sub-System : ESP Filter System *

Room Name : Plenum 1

Sub-assembly : ESP Filter

Location: (YVB) / HVB/ KVB *

T&C Plan Ref. No.: J3883-TVS-S-06366

Reference drawing: J3883/MEP/APS/1603&1604&1605

Electrical Test - Continuity Test

A.Test instruments

Type	Model	Serial No. of Instrument	Calibration Certificated No.	Date of Calibration
Digital Ohm Micrometer	UT620C	C242021984	ACZ20250220127	22/02/2025

B. Commissioning Tests

APS Plenum 1 ESP Sub-assembly: 3

Item	Test Conductor	P1 (IONIZER)	P2 (IONIZER)	P3 (IONIZER)
1	P4 (IONIZER)	0.28	N.A.	N.A.
2	P5 (IONIZER)	N.A.	0.11	N.A.
3	P6 (IONIZER)	N.A.	N.A.	0.14
4	P7 (IONIZER)	0.08	N.A.	N.A.
5	P8 (IONIZER)	N.A.	0.08	N.A.
6	P9 (IONIZER)	N.A.	N.A.	0.15
7	P10 (IONIZER)	0.08	N.A.	N.A.
8	P11 (IONIZER)	N.A.	0.1	N.A.
9	P12 (IONIZER)	N.A.	N.A.	0.13
10	P13 (IONIZER)	0.08	N.A.	N.A.
11	P14 (IONIZER)	N.A.	0.21	N.A.
12	P15 (IONIZER)	N.A.	N.A.	0.06
13	P16 (IONIZER)	0.09	N.A.	N.A.
14	P17 (IONIZER)	N.A.	0.21	N.A.
15	P18 (IONIZER)	N.A.	N.A.	0.06

According to the manufacture's QC report, the resistance of each ESP cell collector or ionizer (from collector/ionizer plate to busbar terminal) should be less than 0.5 ohm, and the APS ESP busbar resistance should be less than or equal to 0.1 ohm. The total passing resistance for ionizer / collector would be the sum of the resistance of two cells (2 cell * 0.5 ohm) and the resistance of the busbar (0.1 ohm)
Therefore, the passing criteria of ionizer /collector continuity test is under 1.1 ohm.
The passing criteria between frame plate /collector earth plate and earth is under 0.6 ohm

C. Comment

Tested / Checked by: (Name of CTA Representative)	Name: Ho Tung	Signature: Ho Tung	Date: 2025/02/28
Witnessed by: (Name of JEC Representative)	Name: John Chan	Signature:	Date: 2025/02/28
Witnessed by: (Name of GCL)	Name: Raymond Lau	Signature:	Date: 2025/02/28
Witnessed by: (Name of AMMJV)	Name: Sam Lau	Signature:	Date: 2025/02/28
Witnessed by: (Name of ZMSD)	Name: WONG Cheong Shing CIE/TSC/1	Signature:	Date: 2025/02/28
Witnessed by: (Name of	Name:	Signature:	Date:

Gammon

CTA INTERNATIONAL AS

AIR PURIFICATION SYSTEM (APS)

ESP FILTER ELECTRICAL TEST INSPECTION CHECK FORM

T&C for ESP Filter

Project: Contract No. HY/2019/13 Central Kowloon Route - Buildings, Electrical and Mechanical Works

RISC NO.: RISC-SI-030091

Date: 2025/02/28

APS Sub-System : ESP Filter System *

Room Name : Plenum 1

Sub-assembly : ESP filter

Location: KVB/ HVB/ KVB *

T&C Plan Ref. No.: J3883-TCS-S-0686

Reference drawing: J3883/MEP/APS/1603&1604&1605

Electrical Test - Continuity Test

A. Test instruments

Type	Model	Serial No. of Instrument	Calibration Certificated No.	Date of Calibration
Digital Ohm Micrometer	UT620C+	C242921984	AC2202502220127	22/02/2025

B. Commissioning Tests

APS Plenum 1 ESP Sub-assembly: 3

Item	Test Conductor	P19 (COLLECTOR)
1	P20 (COLLECTOR)	0.13
2	P21 (COLLECTOR)	0.15
3	P22 (COLLECTOR)	0.06
4	P23 (COLLECTOR)	0.06
5	P24 (COLLECTOR)	0.06
6	P25 (COLLECTOR)	0.6
7	P26 (COLLECTOR)	0.3
8	P27 (COLLECTOR)	0.3
9	P28 (COLLECTOR)	0.3
10	P29 (COLLECTOR)	0.3
11	P30 (COLLECTOR)	0.3
12	P31 (COLLECTOR)	0.3
13	P32 (COLLECTOR)	0.3
14	P33 (COLLECTOR)	0.3
15	P34 (COLLECTOR)	0.11
16	P35 (COLLECTOR)	0.3
17	P36 (COLLECTOR)	0.3

Item	Test Conductor	P37 (COLLECTOR EARTH)
18	P38 (COLLECTOR EARTH)	0.01
19	P39 (COLLECTOR EARTH)	0.01
20	P40 (COLLECTOR EARTH)	0.01
21	P41 (COLLECTOR EARTH)	0.01
22	P42 (COLLECTOR EARTH)	0.01
23	P43 (COLLECTOR EARTH)	0.01
24	P44 (COLLECTOR EARTH)	0.01
25	P45 (COLLECTOR EARTH)	0.01
26	P46 (COLLECTOR EARTH)	0.01
27	P47 (COLLECTOR EARTH)	0.01
28	P48 (COLLECTOR EARTH)	0.01
29	P49 (COLLECTOR EARTH)	0.01
30	P50 (COLLECTOR EARTH)	0.01
31	P51 (COLLECTOR EARTH)	0.01
32	P52 (COLLECTOR EARTH)	0.01
33	P53 (COLLECTOR EARTH)	0.01
34	P54 (COLLECTOR EARTH)	0.01
35	P55 (FRAME)	0.01
36	EARTH	0.01

According to the manufacture's QC report, the resistance of each ESP cell collector or ionizer (from collector/ionizer plate to busbar terminal) should be less than 0.5 ohm, and the APS ESP busbar resistance should be less than or equal to 0.1 ohm. The total passing resistance for ionizer / collector would be the sum of the resistance of two cells (2 cell * 0.5 ohm) and the resistance of the busbar (0.1 ohm). Therefore, the passing criteria of ionizer /collector continuity test is under 1.1 ohm.
The passing criteria between frame plate /collector earth plate and earth is under 0.5 ohm.

C. Comment

Tested / Checked by: (Name of CTA Representative)	Name: Ho Tung	Signature: Ho	Date: 2025/02/28
Witnessed by: (Name of JEC Representative)	Name: John Chan	Signature:	Date: 2025/02/28
Witnessed by: (Name of GCL)	Name: Raymond Lau	Signature:	Date: 2025/02/28
Witnessed by: (Name of AMMJV)	Name: Sam Lui	Signature:	Date: 2025/02/28
Witnessed by: (Name of EMSD)	Name: WONG Cheong Shing CIE/TSC/I	Signature:	Date: 2025/02/28
Witnessed by: (Name of)	Name:	Signature:	Date:

Gammon

CTA INTERNATIONAL AS

T&C for ESP Filter

AIR PURIFICATION SYSTEM (APS)
ESP FILTER ELECTRICAL TEST INSPECTION CHECK FORM

Project: Contract No. HY/2019/13 Central Kowloon Route - Buildings, Electrical and Mechanical Works

RISC NO.: RISC_SI_030001

Date: 2025/02/28

APS Sub-System : ESP Filter System *

Room Name : Plenum 1

Sub-assembly : ESP Filter

Location: (YVB) / HVB/ KVB *

T&C Plan Ref. No.: J3883-TVS-S-06866

Reference drawing: J3883/MEP/APS/1603&1604&1605

Electrical Test - Continuity Test

A.Test instruments

Type	Model	Serial No. of Instrument	Calibration Certificated No.	Date of Calibration
Digital Ohm Micrometer	UT620C+	C242921984	ACZ20250220123	22/02/2025

B. Commissioning Tests

APS Plenum 1 ESP Sub-assembly: 4

Item	Test Conductor	P1 (IONIZER)	P2 (IONIZER)	P3 (IONIZER)
1	P4 (IONIZER)	0.11	N.A.	N.A.
2	P5 (IONIZER)	N.A.	0.1	N.A.
3	P6 (IONIZER)	N.A.	N.A.	0.09
4	P7 (IONIZER)	0.14	N.A.	N.A.
5	P8 (IONIZER)	N.A.	0.12	N.A.
6	P9 (IONIZER)	N.A.	N.A.	0.28
7	P10 (IONIZER)	0.22	N.A.	N.A.
8	P11 (IONIZER)	N.A.	0.16	N.A.
9	P12 (IONIZER)	N.A.	N.A.	0.26
10	P13 (IONIZER)	0.5	N.A.	N.A.
11	P14 (IONIZER)	N.A.	0.16	N.A.
12	P15 (IONIZER)	N.A.	N.A.	0.11
13	P16 (IONIZER)	0.6	N.A.	N.A.
14	P17 (IONIZER)	N.A.	0.15	N.A.
15	P18 (IONIZER)	N.A.	N.A.	0.11

According to the manufacture's QC report, the resistance of each ESP cell collector or ionizer (from collector/ionizer plate to busbar terminal) should be less than 0.5 ohm, and the APS ESP busbar resistance should be less than or equal to 0.1 ohm. The total passing resistance for ionizer / collector would be the sum of the resistance of two cells (2 cell * 0.5 ohm) and the resistance of the busbar (0.1 ohm)
Therefore, the passing criteria of ionizer /collector continuity test is under 1.1 ohm
The passing criteria between frame plate /collector earth plate and earth is under 0.6 ohm.

C. Comment

Tested / Checked by: (Name of CTA Representative)	Name: Ho Tung	Signature: Ho Tung	Date: 2025/02/28
Witnessed by: (Name of JEC Representative)	Name: John Chan	Signature:	Date: 2025/02/28
Witnessed by: (Name of GCL)	Name: Raymond Lau	Signature:	Date: 2025/02/28
Witnessed by: (Name of AWMJV)	Name: Sam Lui	Signature:	Date: 2025/02/28
Witnessed by: (Name of EMSD)	Name: WONG Cheong Shing CIE/TSC/1	Signature:	Date: 2025/02/28
Witnessed by: (Name of	Name:	Signature:	Date:

Gammon

CTA INTERNATIONAL AS

AIR PURIFICATION SYSTEM (APS)
ESP FILTER ELECTRICAL TEST INSPECTION CHECK FORM

T&C for ESP Filter

Project: Contract No. HY/2019/13 Central Kowloon Route - Buildings, Electrical and Mechanical Works

RISC NO.: RISC-SI-030091

Date: 2025/02/28

APS Sub-System : ESP Filter System *

Room Name : plenum 1

Sub-assembly : ESP filter

Location: YVB / HVB / KVB *

T&C Plan Ref. No.: J3883-TVS-S-06866

Reference drawing: J3883/MEP/APS/1603&1604&1605

Electrical Test - Continuity Test

A. Test instruments

Type	Model	Serial No. of Instrument	Calibration Certificated No.	Date of Calibration
Digital Ohm Micrometer	UT620C+	C2A2021484	ACZ 20250220127	22/02/2025

B. Commissioning Tests

APS Plenum 1 ESP Sub-assembly: 4

Item	Test Conductor	P19 (COLLECTOR)
1	P20 (COLLECTOR)	0.07
2	P21 (COLLECTOR)	0.07
3	P22 (COLLECTOR)	0.08
4	P23 (COLLECTOR)	0.08
5	P24 (COLLECTOR)	0.08
6	P25 (COLLECTOR)	0.1
7	P26 (COLLECTOR)	0.03
8	P27 (COLLECTOR)	0.1
9	P28 (COLLECTOR)	0.1
10	P29 (COLLECTOR)	0.2
11	P30 (COLLECTOR)	0.2
12	P31 (COLLECTOR)	0.2
13	P32 (COLLECTOR)	0.17
14	P33 (COLLECTOR)	0.17
15	P34 (COLLECTOR)	0.17
16	P35 (COLLECTOR)	0.17
17	P36 (COLLECTOR)	0.17

Item	Test Conductor	P37 (COLLECTOR EARTH)
18	P38 (COLLECTOR EARTH)	0.01
19	P39 (COLLECTOR EARTH)	0.01
20	P40 (COLLECTOR EARTH)	0.01
21	P41 (COLLECTOR EARTH)	0.01
22	P42 (COLLECTOR EARTH)	0.01
23	P43 (COLLECTOR EARTH)	0.01
24	P44 (COLLECTOR EARTH)	0.01
25	P45 (COLLECTOR EARTH)	0.01
26	P46 (COLLECTOR EARTH)	0.01
27	P47 (COLLECTOR EARTH)	0.01
28	P48 (COLLECTOR EARTH)	0.01
29	P49 (COLLECTOR EARTH)	0.01
30	P50 (COLLECTOR EARTH)	0.01
31	P51 (COLLECTOR EARTH)	0.01
32	P52 (COLLECTOR EARTH)	0.01
33	P53 (COLLECTOR EARTH)	0.01
34	P54 (COLLECTOR EARTH)	0.01
35	P55 (FRAME)	0.01
36	EARTH	0.01

According to the manufacture's QC report, the resistance of each ESP cell collector or ionizer (from collector/ionizer plate to busbar terminal) should be less than 0.5 ohm, and the APS ESP busbar resistance should be less than or equal to 0.1 ohm. The total passing resistance for ionizer / collector would be the sum of the resistance of two cells (2 cell × 0.5 ohm) and the resistance of the busbar (0.1 ohm). Therefore, the passing criteria of ionizer /collector continuity test is under 1.1 ohm.
The passing criteria between frame plate /collector earth plate and earth is under 0.5 ohm.

C. Comment

Tested / Checked by: (Name of CTA Representative)	Name: Ho Tung	Signature: Ho Tung	Date: 2025/02/28
Witnessed by: (Name of JEC Representative)	Name: John Chan	Signature:	Date: 2025/02/28
Witnessed by: (Name of GCL)	Name: Raymond Lam	Signature:	Date: 2025/02/28
Witnessed by: (Name of AMMJV)	Name: Sam Lau	Signature:	Date: 2025/02/28
Witnessed by: (Name of EM&D)	Name: WONG Cheong Shing CIE/TSC/1	Signature:	Date: 2025/02/28
Witnessed by: (Name of)	Name:	Signature:	Date:

Gammon

CTA INTERNATIONAL AS

T&C for ESP Filter

AIR PURIFICATION SYSTEM (APS)
ESP FILTER ELECTRICAL TEST INSPECTION CHECK FORM

Project: Contract No. HY/2019/13 Central Kowloon Route - Buildings, Electrical and Mechanical Works

RISC NO.: RISC_SI_030001

Date: 2025/02/28

APS Sub-System : ESP Filter System *

Room Name : Plenum 1

Sub-assembly : ESP Filter

Location: KVB / HVB/ KVB *

T&C Plan Ref. No.: J3883-TVS-S-06866

Reference drawing: J3883/MEP/APS/1603&1604&1605

Electrical Test - Continuity Test

A.Test instruments

Type	Model	Serial No. of Instrument	Calibration Certificated No.	Date of Calibration
Digital Ohm Micrometer	UT620C+	C242921984	AC2202502220127	22/02/2025

B. Commissioning Tests

APS Plenum 1 ESP Sub-assembly: 5

Item	Test Conductor	P1 (IONIZER)	P2 (IONIZER)	P3 (IONIZER)
1	P4 (IONIZER)	0.08	N.A.	N.A.
2	P5 (IONIZER)	N.A.	0.06	N.A.
3	P6 (IONIZER)	N.A.	N.A.	0.21
4	P7 (IONIZER)	0.09	N.A.	N.A.
5	P8 (IONIZER)	N.A.	0.24	N.A.
6	P9 (IONIZER)	N.A.	N.A.	0.75
7	P10 (IONIZER)	0.09	N.A.	N.A.
8	P11 (IONIZER)	N.A.	0.25	N.A.
9	P12 (IONIZER)	N.A.	N.A.	0.6
10	P13 (IONIZER)	0.09	N.A.	N.A.
11	P14 (IONIZER)	N.A.	0.13	N.A.
12	P15 (IONIZER)	N.A.	N.A.	0.11
13	P16 (IONIZER)	0.09	N.A.	N.A.
14	P17 (IONIZER)	N.A.	0.13	N.A.
15	P18 (IONIZER)	N.A.	N.A.	0.11

According to the manufacture's QC report, the resistance of each ESP cell collector or ionizer (from collector/ionizer plate to busbar terminal) should be less than 0.5 ohm, and the APS ESP busbar resistance should be less than or equal to 0.1 ohm. The total passing resistance for ionizer / collector would be the sum of the resistance of two cells (2 cell * 0.5 ohm) and the resistance of the busbar (0.1 ohm)
Therefore, the passing criteria of ionizer /collector continuity test is under 1.1 ohm
The passing criteria between frame plate /collector earth plate and earth is under 0.8 ohm.

C. Comment

Tested / Checked by: (Name of CTA Representative)	Name: Ho Tung	Signature: Ho Tung	Date: 2025/02/28
Witnessed by: (Name of JEC Representative)	Name: John Chan	Signature:	Date: 2025/02/28
Witnessed by: (Name of GCL)	Name: Raymond Lau	Signature:	Date: 2025/02/28
Witnessed by: (Name of AMMSL)	Name: Sam Lau	Signature:	Date: 2025/02/28
Witnessed by: (Name of EMSD)	Name: WONG Cheong Shing CIE/TSC/1	Signature:	Date: 2025/02/28
Witnessed by: (Name of	Name:	Signature:	Date:

Gammon

CTA INTERNATIONAL AS

AIR PURIFICATION SYSTEM (APS)
ESP FILTER ELECTRICAL TEST INSPECTION CHECK FORM

T&C for ESP Filter

Project: Contract No. HY/2019/13 Central Kowloon Route - Buildings, Electrical and Mechanical Works

RISC NO.: RISC-SI-030091

Date: 2025/02/28

APS Sub-System : ESP Filter System *

Room Name : Plenum 1

Sub-assembly : ESP Filter

Location: YVB / HVB/ KVB *

T&C Plan Ref. No.: J3883-TVS-S-06866

Reference drawing: J3883/MEP/APS/1603&1604&1605

Electrical Test - Continuity Test

A. Test instruments

Type	Model	Serial No. of Instrument	Calibration Certificated No.	Date of Calibration
Digital Ohm Micrometer	UT620C+	C244292984	ACZ2202502220127	22/02/2025

B. Commissioning Tests

APS Plenum 1 ESP Sub-assembly: 5

Item	Test Conductor	P19 (COLLECTOR)
1	P20 (COLLECTOR)	0.17
2	P21 (COLLECTOR)	0.17
3	P22 (COLLECTOR)	0.16
4	P23 (COLLECTOR)	0.15
5	P24 (COLLECTOR)	0.15
6	P25 (COLLECTOR)	0.18
7	P26 (COLLECTOR)	0.08
8	P27 (COLLECTOR)	0.08
9	P28 (COLLECTOR)	0.09
10	P29 (COLLECTOR)	0.09
11	P30 (COLLECTOR)	0.2
12	P31 (COLLECTOR)	0.11
13	P32 (COLLECTOR)	0.11
14	P33 (COLLECTOR)	0.01
15	P34 (COLLECTOR)	0.1
16	P35 (COLLECTOR)	0.1
17	P36 (COLLECTOR)	0.15

Item	Test Conductor	P37 (COLLECTOR EARTH)
18	P38 (COLLECTOR EARTH)	0.01
19	P39 (COLLECTOR EARTH)	0.01
20	P40 (COLLECTOR EARTH)	0.01
21	P41 (COLLECTOR EARTH)	0.01
22	P42 (COLLECTOR EARTH)	0.01
23	P43 (COLLECTOR EARTH)	0.01
24	P44 (COLLECTOR EARTH)	0.01
25	P45 (COLLECTOR EARTH)	0.01
26	P46 (COLLECTOR EARTH)	0.01
27	P47 (COLLECTOR EARTH)	0.01
28	P48 (COLLECTOR EARTH)	0.01
29	P49 (COLLECTOR EARTH)	0.01
30	P50 (COLLECTOR EARTH)	0.01
31	P51 (COLLECTOR EARTH)	0.01
32	P52 (COLLECTOR EARTH)	0.01
33	P53 (COLLECTOR EARTH)	0.01
34	P54 (COLLECTOR EARTH)	0.01
35	P55 (FRAME)	0.01
36	EARTH	0.01

According to the manufacture's QC report, the resistance of each ESP cell collector or ionizer (from collector/ionizer plate to busbar terminal) should be less than 0.5 ohm, and the APS ESP busbar resistance should be less than or equal to 0.1 ohm. The total passing resistance for ionizer / collector would be the sum of the resistance of two cells (2 cell * 0.5 ohm) and the resistance of the busbar (0.1 ohm). Therefore, the passing criteria of ionizer /collector continuity test is under 1.1 ohm.
The passing criteria between frame plate /collector earth plate and earth is under 0.5 ohm.

C. Comment

Tested / Checked by: (Name of CTA Representative)	Name: Ho Tung	Signature: Ho Tung	Date: 2025/02/28
Witnessed by: (Name of JEC Representative)	Name: John Chan	Signature:	Date: 2025/02/28
Witnessed by: (Name of GCL)	Name: Raymond Law	Signature:	Date: 2025/02/28
Witnessed by: (Name of AMNIV)	Name: Sam Lui	Signature:	Date: 2025/02/28
Witnessed by: (Name of EMSD)	Name: WONG Cheong Shing CIE/TSC/1	Signature:	Date: 2025/02/28
Witnessed by: (Name of)	Name:	Signature:	Date:

Gammon

CTA INTERNATIONAL AS CLEAN TUNNEL AIR

AIR PURIFICATION SYSTEM (APS)
ESP FILTER ELECTRICAL TEST INSPECTION CHECK FORM

T&C for ESP Filter

Project: Contract No. HY/2019/13 Central Kowloon Route - Buildings, Electrical and Mechanical Works

RISC NO.: RISL-SI-030092

Date: 28/02/2025

APS Sub-System : ESP Filter System *

Room Name : Plenum 2

Sub-assembly : ~~[illegible]~~ ESP Filter

Location: YVB / HVB/ KVB *

T&C Plan Ref. No.: J3883-TVS-S-06866

Reference drawing: J3883-TVS-D-01039

Electrical Test - Continuity Test

A.Test instruments

Type	Model	Serial No. of Instrument	Calibration Certificated No.	Date of Calibration
Digital Ohm micrometer	UT620C+	C24292 1984	ACI2025022210127	22/02/2025

B. Commissioning Tests

APS Plenum 2 ESP Sub-assembly: 01

Item	Test Conductor	P1 (IONIZER)	P2 (IONIZER)	P3 (IONIZER)
1	P4 (IONIZER)	0.08	N.A.	N.A.
2	P5 (IONIZER)	N.A.	0.08	N.A.
3	P6 (IONIZER)	N.A.	N.A.	0.17
4	P7 (IONIZER)	0.08	N.A.	N.A.
5	P8 (IONIZER)	N.A.	0.13	N.A.
6	P9 (IONIZER)	N.A.	N.A.	0.07
7	P10 (IONIZER)	0.08	N.A.	N.A.
8	P11 (IONIZER)	N.A.	0.13	N.A.
9	P12 (IONIZER)	N.A.	N.A.	0.09
10	P13 (IONIZER)	0.08	N.A.	N.A.
11	P14 (IONIZER)	N.A.	0.08	N.A.
12	P15 (IONIZER)	N.A.	N.A.	0.09
13	P16 (IONIZER)	0.09	N.A.	N.A.
14	P17 (IONIZER)	N.A.	0.07	N.A.
15	P18 (IONIZER)	N.A.	N.A.	0.13

According to the manufacture's QC report, the resistance of each ESP cell collector or ionizer (from collector/ionizer plate to busbar terminal) should be less than 0.5 ohm, and the APS ESP busbar resistance should be less than or equal to 0.1 ohm. The total passing resistance for ionizer / collector would be the sum of the resistance of two cells (2 cell * 0.5 ohm) and the resistance of the busbar (0.1 ohm).
Therefore, the passing criteria of ionizer /collector continuity test is under 1.1 ohm.
The passing criteria between frame plate /collector earth plate and earth is under 0.6 ohm.

C. Comment

Tested / Checked by: (Name of CTA Representative)	Name: Ho Tuy	Signature: Ho Tuy	Date: 2025/02/28
Witnessed by: (Name of JEC Representative)	Name: John Chan	Signature:	Date: 2025/02/28
Witnessed by: (Name of GCL	Name: Raymond Lau	Signature:	Date: 2025/02/28
Witnessed by: (Name of AMSV	Name: Sam Lei	Signature:	Date: 2025/02/28
Witnessed by: (Name of ZMSD	Name: WONG Cheong Shing CIE/TSC/1	Signature:	Date: 2025/02/28
Witnessed by: (Name of	Name:	Signature:	Date:

Gammon

CTA INTERNATIONAL AS CLEAN TUNNEL AIR

AIR PURIFICATION SYSTEM (APS)
ESP FILTER ELECTRICAL TEST INSPECTION CHECK FORM

T&C for ESP Filter

Project: Contract No. HY/2019/13 Central Kowloon Route - Buildings, Electrical and Mechanical Works

RISC NO.: RISC-S1-030092

Date: 28/02/2025

APS Sub-System : ESP Filter System *

Room Name : Plenum 2

Sub-assembly : ESP Filter

Location: YVB / HVB / KVB *

T&C Plan Ref. No.: J3883-TVS-B-06866

Reference drawing: J3883-TVS-D-01839

Electrical Test - Continuity Test

A. Test instruments

Type	Model	Serial No. of Instrument	Calibration Certificated No.	Date of Calibration
Digital Micro Ohm meter	UT620C+	C242921084	AC22025022220127	22/02/2025

B. Commissioning Tests

APS Plenum 2 ESP Sub-assembly: ~~107~~. 1

Item	Test Conductor	P19 (COLLECTOR)
1	P20 (COLLECTOR)	0.8
2	P21 (COLLECTOR)	0.48
3	P22 (COLLECTOR)	0.6
4	P23 (COLLECTOR)	0.26
5	P24 (COLLECTOR)	0.12
6	P25 (COLLECTOR)	0.06
7	P26 (COLLECTOR)	0.4
8	P27 (COLLECTOR)	0.86
9	P28 (COLLECTOR)	0.4
10	P29 (COLLECTOR)	0.15
11	P30 (COLLECTOR)	0.15
12	P31 (COLLECTOR)	0.08
13	P32 (COLLECTOR)	0.13
14	P33 (COLLECTOR)	0.17
15	P34 (COLLECTOR)	0.07
16	P35 (COLLECTOR)	0.18
17	P36 (COLLECTOR)	0.6

Item	Test Conductor	P37 (COLLECTOR EARTH)
18	P38 (COLLECTOR EARTH)	0.01
19	P39 (COLLECTOR EARTH)	0.01
20	P40 (COLLECTOR EARTH)	0.01
21	P41 (COLLECTOR EARTH)	0.01
22	P42 (COLLECTOR EARTH)	0.01
23	P43 (COLLECTOR EARTH)	0.01
24	P44 (COLLECTOR EARTH)	0.01
25	P45 (COLLECTOR EARTH)	0.01
26	P46 (COLLECTOR EARTH)	0.01
27	P47 (COLLECTOR EARTH)	0.01
28	P48 (COLLECTOR EARTH)	0.01
29	P49 (COLLECTOR EARTH)	0.01
30	P50 (COLLECTOR EARTH)	0.01
31	P51 (COLLECTOR EARTH)	0.01
32	P52 (COLLECTOR EARTH)	0.01
33	P53 (COLLECTOR EARTH)	0.01
34	P54 (COLLECTOR EARTH)	0.01
35	P55 (FRAME)	0.01
36	EARTH	0.01

According to the manufacture's QC report, the resistance of each ESP cell collector or ionizer (from collector/ionizer plate to busbar terminal) should be less than 0.5 ohm, and the APS ESP busbar resistance should be less than or equal to 0.1 ohm. The total passing resistance for ionizer / collector would be the sum of the resistance of two cells (2 cell * 0.5 ohm) and the resistance of the busbar (0.1 ohm). Therefore, the passing criteria of ionizer /collector continuity test is under 1.1 ohm.
The passing criteria between frame plate /collector earth plate and earth is under 0.6 ohm.

C. Comment

Tested / Checked by: (Name of CTA Representative)	Name: Ho Tuy	Signature: Ho Tuy	Date: 28/02/2025
Witnessed by: (Name of JEC Representative)	Name: John Chan	Signature:	Date: 28/02/2025
Witnessed by: (Name of GCL)	Name: Raymond Lam	Signature:	Date: 28/02/2025
Witnessed by: (Name of AMMJV)	Name: Sam Lui	Signature:	Date: 28/02/2025
Witnessed by: (Name of GMSD)	Name: WONG Cheong Shing CIE/TSC/1	Signature:	Date: 28/02/2025
Witnessed by: (Name of)	Name:	Signature:	Date:

Gammon

CTA INTERNATIONAL AS CLEAN TUNNEL AIR

AIR PURIFICATION SYSTEM (APS)
ESP FILTER ELECTRICAL TEST INSPECTION CHECK FORM

T&C for ESP Filter

Project: Contract No. HY/2019/13 Central Kowloon Route - Buildings, Electrical and Mechanical Works

RISC NO.: RISC-ST-030002

Date: 28/02/2025

APS Sub-System : ESP Filter System *

Room Name : Plenum 2

Sub-assembly : ESP filter

Location: KVB / HVB/ KVB *

T&C Plan Ref. No.: J3883-TVS-S-06866

Reference drawing: J3883-TVS-D-01839

Electrical Test - Continuity Test

A.Test instruments

Type	Model	Serial No. of Instrument	Calibration Certificated No.	Date of Calibration
Digital Ohm Micrometer	UT620C+	C242921984	AC22025022201 27	22/02/2025

B. Commissioning Tests

APS Plenum 2 ESP Sub-assembly: 2

Item	Test Conductor	P1 (IONIZER)	P2 (IONIZER)	P3 (IONIZER)
1	P4 (IONIZER)	0.08	N.A.	N.A.
2	P5 (IONIZER)	N.A.	0.07	N.A.
3	P6 (IONIZER)	N.A.	N.A.	0.09
4	P7 (IONIZER)	0.07	N.A.	N.A.
5	P8 (IONIZER)	N.A.	0.07	N.A.
6	P9 (IONIZER)	N.A.	N.A.	0.08
7	P10 (IONIZER)	0.09	N.A.	N.A.
8	P11 (IONIZER)	N.A.	0.07	N.A.
9	P12 (IONIZER)	N.A.	N.A.	0.07
10	P13 (IONIZER)	0.1	N.A.	N.A.
11	P14 (IONIZER)	N.A.	0.07	N.A.
12	P15 (IONIZER)	N.A.	N.A.	0.24
13	P16 (IONIZER)	0.08	N.A.	N.A.
14	P17 (IONIZER)	N.A.	0.08	N.A.
15	P18 (IONIZER)	N.A.	N.A.	0.24

According to the manufacture's QC report, the resistance of each ESP cell collector or ionizer (from collector/ionizer plate to busbar terminal) should be less than 0.5 ohm, and the APS ESP busbar resistance should be less than or equal to 0.1 ohm. The total passing resistance for ionizer / collector would be the sum of the resistance of two cells (2 cell * 0.5 ohm) and the resistance of the busbar (0.1 ohm).
Therefore, the passing criteria of ionizer /collector continuity test is under 1.1 ohm.
The passing criteria between frame plate /collector earth plate and earth is under 0.6 ohm.

C. Comment

Tested / Checked by: (Name of CTA Representative)	Name: Ho Tuy	Signature: Ho Tuy	Date: 28/02/2025
Witnessed by: (Name of JEC Representative)	Name: John Chan	Signature:	Date: 28/02/2025
Witnessed by: (Name of GCL)	Name: Raymond Lam	Signature:	Date: 28/02/2025
Witnessed by: (Name of MMSU)	Name: Sony Lui	Signature:	Date: 28/02/2025
Witnessed by: (Name of ZMSD)	Name: WONG Cheong Shing CIE/TSC/1	Signature:	Date: 28/02/2025
Witnessed by: (Name of	Name:	Signature:	Date:

Gammon

CTA INTERNATIONAL AS CLEAN TUNNEL AIR

AIR PURIFICATION SYSTEM (APS)
ESP FILTER ELECTRICAL TEST INSPECTION CHECK FORM

T&C for ESP Filter

Project: Contract No. HY/2019/13 Central Kowloon Route - Buildings, Electrical and Mechanical Works

RISC NO.: RISC-SI-D30092

Date: 28/02/2025

APS Sub-System : ESP Filter System *

Room Name : Plenum 2

Sub-assembly : ESP filter

Location: YVB / HVB / KVB *

T&C Plan Ref. No.: J3882-TVS-S-01866

Reference drawing: J3882-TVS-D-01839

Electrical Test - Continuity Test

A. Test instruments

Type	Model	Serial No. of Instrument	Calibration Certificated No.	Date of Calibration
Digital Ohm Micrometer	UT620C+	~~C242921984~~	ACL2025022220127	22/02/2025
		C242921984		

B. Commissioning Tests

APS Plenum 2 ESP Sub-assembly: 2

Item	Test Conductor	P19 (COLLECTOR)
1	P20 (COLLECTOR)	0.05
2	P21 (COLLECTOR)	0.06
3	P22 (COLLECTOR)	0.05
4	P23 (COLLECTOR)	0.09
5	P24 (COLLECTOR)	0.1
6	P25 (COLLECTOR)	0.06
7	P26 (COLLECTOR)	0.1
8	P27 (COLLECTOR)	0.1
9	P28 (COLLECTOR)	0.06
10	P29 (COLLECTOR)	0.11
11	P30 (COLLECTOR)	0.12
12	P31 (COLLECTOR)	0.06
13	P32 (COLLECTOR)	0.13
14	P33 (COLLECTOR)	0.13
15	P34 (COLLECTOR)	0.05
16	P35 (COLLECTOR)	0.15
17	P36 (COLLECTOR)	0.15

Item	Test Conductor	P37 (COLLECTOR EARTH)
18	P38 (COLLECTOR EARTH)	0.01
19	P39 (COLLECTOR EARTH)	0.01
20	P40 (COLLECTOR EARTH)	0.01
21	P41 (COLLECTOR EARTH)	0.01
22	P42 (COLLECTOR EARTH)	0.01
23	P43 (COLLECTOR EARTH)	0.01
24	P44 (COLLECTOR EARTH)	0.01
25	P45 (COLLECTOR EARTH)	0.01
26	P46 (COLLECTOR EARTH)	0.01
27	P47 (COLLECTOR EARTH)	0.01
28	P48 (COLLECTOR EARTH)	0.01
29	P49 (COLLECTOR EARTH)	0.01
30	P50 (COLLECTOR EARTH)	0.01
31	P51 (COLLECTOR EARTH)	0.01
32	P52 (COLLECTOR EARTH)	0.01
33	P53 (COLLECTOR EARTH)	0.01
34	P54 (COLLECTOR EARTH)	0.01
35	P55 (FRAME)	0.01
36	EARTH	0.01

According to the manufacture's QC report, the resistance of each ESP cell collector or ionizer (from collector/ionizer plate to busbar terminal) should be less than 0.5 ohm, and the APS ESP busbar resistance should be less than or equal to 0.1 ohm. The total passing resistance for ionizer / collector would be the sum of the resistance of two cells (2 cell * 0.5 ohm) and the resistance of the busbar (0.1 ohm). Therefore, the passing criteria of ionizer /collector continuity test is under 1.1 ohm.
The passing criteria between frame plate /collector earth plate and earth is under 0.6 ohm.

C. Comment

Tested / Checked by: (Name of CTA Representative)	Name: Ho Tung	Signature: Ho Tung	Date: 28/02/2025
Witnessed by: (Name of JEC Representative)	Name: John Chan	Signature:	Date: 28/02/2025
Witnessed by: (Name of GCL)	Name: Raymond Lam	Signature:	Date: 28/02/2025
Witnessed by: (Name of AMMSV)	Name: Sam Lui	Signature:	Date: 28/02/2025
Witnessed by: (Name of EMSD)	Name: WONG Cheong Shing CIE/TSC/1	Signature:	Date: 28/02/2025
Witnessed by: (Name of)	Name:	Signature:	Date:

Gammon

CTA INTERNATIONAL AS CLEAN TUNNEL AIR

AIR PURIFICATION SYSTEM (APS)
ESP FILTER ELECTRICAL TEST INSPECTION CHECK FORM

T&C for ESP Filter

Project: Contract No. HY/2019/13 Central Kowloon Route - Buildings, Electrical and Mechanical Works

RISC NO.: RISC_SI_030092

Date: 28/02/2025

APS Sub-System : ESP Filter System *

Room Name : Plenum 2

Sub-assembly : ESP Filter

Location: YVB / HVB/ KVB *

T&C Plan Ref. No.: J3883-TVS-S-06866

Reference drawing: J3883-TVS-D-01839

Electrical Test - Continuity Test

A.Test instruments

Type	Model	Serial No. of Instrument	Calibration Certificated No.	Date of Calibration
Digital Ohm Micrometer	UT620C+	C242921984	AC22025022220127	22/02/2025

B. Commissioning Tests

APS Plenum 2 ESP Sub-assembly: 3

Item	Test Conductor	P1 (IONIZER)	P2 (IONIZER)	P3 (IONIZER)
1	P4 (IONIZER)	0.12	N.A.	N.A.
2	P5 (IONIZER)	N.A.	0.19	N.A.
3	P6 (IONIZER)	N.A.	N.A.	0.12
4	P7 (IONIZER)	0.07	N.A.	N.A.
5	P8 (IONIZER)	N.A.	0.09	N.A.
6	P9 (IONIZER)	N.A.	N.A.	0.07
7	P10 (IONIZER)	0.07	N.A.	N.A.
8	P11 (IONIZER)	N.A.	0.09	N.A.
9	P12 (IONIZER)	N.A.	N.A.	0.19
10	P13 (IONIZER)	0.07	N.A.	N.A.
11	P14 (IONIZER)	N.A.	0.08	N.A.
12	P15 (IONIZER)	N.A.	N.A.	0.22
13	P16 (IONIZER)	0.08	N.A.	N.A.
14	P17 (IONIZER)	N.A.	0.07	N.A.
15	P18 (IONIZER)	N.A.	N.A.	0.1

According to the manufacture's QC report, the resistance of each ESP cell collector or ionizer (from collector/ionizer plate to busbar terminal) should be less than 0.5 ohm, and the APS ESP busbar resistance should be less than or equal to 0.1 ohm. The total passing resistance for ionizer / collector would be the sum of the resistance of two cells (2 cell * 0.5 ohm) and the resistance of the busbar (0.1 ohm).
Therefore, the passing criteria of ionizer /collector continuity test is under 1.1 ohm.
The passing criteria between frame plate /collector earth plate and earth is under 0.6 ohm.

C. Comment

Tested / Checked by: (Name of CTA Representative)	Name: Ho Tuo	Signature: Ho Tuo	Date: 28/02/2025
Witnessed by: (Name of JEC Representative)	Name: John Chan	Signature:	Date: 28/02/2025
Witnessed by: (Name of GCL	Name: Raymond Lam	Signature:	Date: 28/02/2025
Witnessed by: (Name of AMMSV	Name: Sam Lui	Signature:	Date: 28/02/2025
Witnessed by: (Name of EMSD	Name: WONG Cheong Shing CIE/TSC/1	Signature:	Date: 28/02/2025
Witnessed by: (Name of	Name:	Signature:	Date:

Gammon

CTA INTERNATIONAL AS CLEAN TUNNEL AIR

AIR PURIFICATION SYSTEM (APS)
ESP FILTER ELECTRICAL TEST INSPECTION CHECK FORM

T&C for ESP Filter

Project: Contract No. HY/2019/13 Central Kowloon Route - Buildings, Electrical and Mechanical Works

RISC NO.: RISC-SI_030092

Date: 28/02/2025

APS Sub-System : ESP Filter System *

Room Name : Plenum 2

Sub-assembly : ESP Filter

Location: YVB / HVB/ KVB *

T&C Plan Ref. No.: J3883-TVS-S-06866

Reference drawing: J3883-TVS-D-01839

Electrical Test - Continuity Test

A. Test instruments

Type	Model	Serial No. of Instrument	Calibration Certificated No.	Date of Calibration
Digital Ohm Micrometer	UT620CT	C242921984	AC32025022220127	22/02/2025

B. Commissioning Tests

APS Plenum 2 ESP Sub-assembly: 3

Item	Test Conductor	P19 (COLLECTOR)
1	P20 (COLLECTOR)	0.06
2	P21 (COLLECTOR)	0.06
3	P22 (COLLECTOR)	0.06
4	P23 (COLLECTOR)	0.08
5	P24 (COLLECTOR)	0.07
6	P25 (COLLECTOR)	0.07
7	P26 (COLLECTOR)	0.11
8	P27 (COLLECTOR)	0.09
9	P28 (COLLECTOR)	0.06
10	P29 (COLLECTOR)	0.12
11	P30 (COLLECTOR)	0.15
12	P31 (COLLECTOR)	0.11
13	P32 (COLLECTOR)	0.15
14	P33 (COLLECTOR)	0.13
15	P34 (COLLECTOR)	0.05
16	P35 (COLLECTOR)	0.14
17	P36 (COLLECTOR)	0.15

Item	Test Conductor	P37 (COLLECTOR EARTH)
18	P38 (COLLECTOR EARTH)	0.01
19	P39 (COLLECTOR EARTH)	0.01
20	P40 (COLLECTOR EARTH)	0.01
21	P41 (COLLECTOR EARTH)	0.01
22	P42 (COLLECTOR EARTH)	0.01
23	P43 (COLLECTOR EARTH)	0.01
24	P44 (COLLECTOR EARTH)	0.01
25	P45 (COLLECTOR EARTH)	0.01
26	P46 (COLLECTOR EARTH)	0.01
27	P47 (COLLECTOR EARTH)	0.01
28	P48 (COLLECTOR EARTH)	0.01
29	P49 (COLLECTOR EARTH)	0.01
30	P50 (COLLECTOR EARTH)	0.01
31	P51 (COLLECTOR EARTH)	0.01
32	P52 (COLLECTOR EARTH)	0.01
33	P53 (COLLECTOR EARTH)	0.01
34	P54 (COLLECTOR EARTH)	0.01
35	P55 (FRAME)	0.01
36	EARTH	0.01

According to the manufacture's QC report, the resistance of each ESP cell collector or ionizer (from collector/ionizer plate to busbar terminal) should be less than 0.5 ohm, and the APS ESP busbar resistance should be less than or equal to 0.1 ohm. The total passing resistance for ionizer / collector would be the sum of the resistance of two cells (2 cell * 0.5 ohm) and the resistance of the busbar (0.1 ohm). Therefore, the passing criteria of ionizer /collector continuity test is under 1.1 ohm.
The passing criteria between frame plate /collector earth plate and earth is under 0.6 ohm.

C. Comment

Tested / Checked by: (Name of CTA Representative)	Name: Ho Tung	Signature: Ho Tung	Date: 28/02/2025
Witnessed by: (Name of JEC Representative)	Name: John Chan	Signature:	Date: 28/02/2025
Witnessed by: (Name of GCL)	Name: Raymond Lam	Signature:	Date: 28/02/2025
Witnessed by: (Name of AMNJV)	Name: Sam Lu	Signature:	Date: 28/02/2025
Witnessed by: (Name of ZMSD) WONG Cheong Shing CIE/TSC/1	Name: WONG Cheong Shing CIE/TSC/1	Signature:	Date: 28/02/2025
Witnessed by: (Name of)	Name:	Signature:	Date:

Gammon

CTA INTERNATIONAL AS CLEAN TUNNEL AIR

AIR PURIFICATION SYSTEM (APS)
ESP FILTER ELECTRICAL TEST INSPECTION CHECK FORM

T&C for ESP Filter

Project: Contract No. HY/2019/13 Central Kowloon Route - Buildings, Electrical and Mechanical Works

RISC NO.: RISL_SI-D30092

Date: 28/02/2025

APS Sub-System : ESP Filter System *

Room Name : Plenum 2

Sub-assembly : ESP filter

Location: YVB / HVB/ KVB *

T&C Plan Ref. No.: J3883-TVS-S-06866

Reference drawing: J3883-TVS-D-01839

Electrical Test - Continuity Test

A.Test instruments

Type	Model	Serial No. of Instrument	Calibration Certificated No.	Date of Calibration
Digital Ohm Micrometer	UT620C+	C242921984	AC2202502220127	22/02/2025

B. Commissioning Tests

APS Plenum 2 ESP Sub-assembly: 4

Item	Test Conductor	P1 (IONIZER)	P2 (IONIZER)	P3 (IONIZER)
1	P4 (IONIZER)	0.18	N.A.	N.A.
2	P5 (IONIZER)	N.A.	0.18	N.A.
3	P6 (IONIZER)	N.A.	N.A.	0.08
4	P7 (IONIZER)	0.07	N.A.	N.A.
5	P8 (IONIZER)	N.A.	0.18	N.A.
6	P9 (IONIZER)	N.A.	N.A.	0.07
7	P10 (IONIZER)	0.07	N.A.	N.A.
8	P11 (IONIZER)	N.A.	0.07	N.A.
9	P12 (IONIZER)	N.A.	N.A.	0.07
10	P13 (IONIZER)	0.09	N.A.	N.A.
11	P14 (IONIZER)	N.A.	0.07	N.A.
12	P15 (IONIZER)	N.A.	N.A.	0.07
13	P16 (IONIZER)	0.09	N.A.	N.A.
14	P17 (IONIZER)	N.A.	0.08	N.A.
15	P18 (IONIZER)	N.A.	N.A.	0.07

According to the manufacture's QC report, the resistance of each ESP cell collector or ionizer (from collector/ionizer plate to busbar terminal) should be less than 0.5 ohm, and the APS ESP busbar resistance should be less than or equal to 0.1 ohm. The total passing resistance for ionizer / collector would be the sum of the resistance of two cells (2 cell * 0.5 ohm) and the resistance of the busbar (0.1 ohm).
Therefore, the passing criteria of ionizer /collector continuity test is under 1.1 ohm.
The passing criteria between frame plate /collector earth plate and earth is under 0.6 ohm.

C. Comment

Tested / Checked by: (Name of CTA Representative)	Name: Ho Tsz	Signature: Ho Tsz	Date: 28/02/2025
Witnessed by: (Name of JEC Representative)	Name: John Chan	Signature:	Date: 28/02/2025
Witnessed by: (Name of GCL)	Name: Raymond Lau	Signature:	Date: 28/02/2025
Witnessed by: (Name of AMMSV)	Name: Sam Lui	Signature:	Date: 28/02/2025
Witnessed by: (Name of EMSD)	Name: WONG Cheong Shing CIE/TSC/1	Signature:	Date: 28/02/2025
Witnessed by: (Name of	Name:	Signature:	Date:

Gammon

CTA INTERNATIONAL AS CLEAN TUNNEL AIR

AIR PURIFICATION SYSTEM (APS)

ESP FILTER ELECTRICAL TEST INSPECTION CHECK FORM

T&C for ESP Filter

Project: Contract No. HY/2019/13 Central Kowloon Route - Buildings, Electrical and Mechanical Works

RISC NO.: RISC-SI-030092

Date: 28/02/2025

APS Sub-System : ESP Filter System *

Room Name : plenum 2

Sub-assembly : ESP Filter

Location: YVB / HVB/ KVB *

T&C Plan Ref. No.: J3883-TVS-S-06866

Reference drawing: J3883-TVS-D-01839

Electrical Test - Continuity Test

A. Test instruments

Type	Model	Serial No. of Instrument	Calibration Certificated No.	Date of Calibration
Digital Ohm Micrometer	UT620C+	C242921984	ACT20250222 0127	22/02/2025

B. Commissioning Tests

APS Plenum 2 ESP Sub-assembly: 4

Item	Test Conductor	P19 (COLLECTOR)
1	P20 (COLLECTOR)	0.08
2	P21 (COLLECTOR)	0.09
3	P22 (COLLECTOR)	0.11
4	P23 (COLLECTOR)	0.1
5	P24 (COLLECTOR)	0.11
6	P25 (COLLECTOR)	0.08
7	P26 (COLLECTOR)	0.11
8	P27 (COLLECTOR)	0.12
9	P28 (COLLECTOR)	0.06
10	P29 (COLLECTOR)	0.13
11	P30 (COLLECTOR)	0.14
12	P31 (COLLECTOR)	0.07
13	P32 (COLLECTOR)	0.14
14	P33 (COLLECTOR)	0.15
15	P34 (COLLECTOR)	0.06
16	P35 (COLLECTOR)	0.17
17	P36 (COLLECTOR)	0.15

Item	Test Conductor	P37 (COLLECTOR EARTH)
18	P38 (COLLECTOR EARTH)	0.01
19	P39 (COLLECTOR EARTH)	0.01
20	P40 (COLLECTOR EARTH)	0.01
21	P41 (COLLECTOR EARTH)	0.01
22	P42 (COLLECTOR EARTH)	0.01
23	P43 (COLLECTOR EARTH)	0.01
24	P44 (COLLECTOR EARTH)	0.01
25	P45 (COLLECTOR EARTH)	0.01
26	P46 (COLLECTOR EARTH)	0.01
27	P47 (COLLECTOR EARTH)	0.01
28	P48 (COLLECTOR EARTH)	0.01
29	P49 (COLLECTOR EARTH)	0.01
30	P50 (COLLECTOR EARTH)	0.01
31	P51 (COLLECTOR EARTH)	0.01
32	P52 (COLLECTOR EARTH)	0.01
33	P53 (COLLECTOR EARTH)	0.01
34	P54 (COLLECTOR EARTH)	0.01
35	P55 (FRAME)	0.01
36	EARTH	0.01

According to the manufacture's QC report, the resistance of each ESP cell collector or ionizer (from collector/ionizer plate to busbar terminal) should be less than 0.5 ohm, and the APS ESP busbar resistance should be less than or equal to 0.1 ohm. The total passing resistance for ionizer / collector would be the sum of the resistance of two cells (2 cell * 0.5 ohm) and the resistance of the busbar (0.1 ohm). Therefore, the passing criteria of ionizer /collector continuity test is under 1.1 ohm.
The passing criteria between frame plate /collector earth plate and earth is under 0.6 ohm.

C. Comment

Tested / Checked by: (Name of CTA Representative)	Name: Ho Tung	Signature: Ho Tung	Date: 28/02/2025
Witnessed by: (Name of JEC Representative)	Name: John Chan	Signature:	Date: 28/02/2025
Witnessed by: (Name of GCL)	Name: Raymond Lau	Signature:	Date: 28/02/2025
Witnessed by: (Name of AMMJV)	Name: Sam Lui	Signature:	Date: 28/02/2025
Witnessed by: (Name of ZMSD)	Name: WONG Cheong Shing CIE/TSC/1	Signature:	Date: 28/02/2025
Witnessed by: (Name of)	Name:	Signature:	Date:

Gammon

CTA INTERNATIONAL AS CLEAN TUNNEL AIR

AIR PURIFICATION SYSTEM (APS)
ESP FILTER ELECTRICAL TEST INSPECTION CHECK FORM

T&C for ESP Filter

Project: Contract No. HY/2019/13 Central Kowloon Route - Buildings, Electrical and Mechanical Works

RISC NO.: RISC-SI-030092

Date: 28/02/2025

APS Sub-System : ESP Filter System *

Room Name : Plenum 2

Sub-assembly : ESP filter

Location: (YVB)/ HVB/ KVB *

T&C Plan Ref. No.: J3883-TVS-S-06866

Reference drawing: J3883-TVS-D-01839

Electrical Test - Continuity Test

A.Test instruments

Type	Model	Serial No. of Instrument	Calibration Certificated No.	Date of Calibration
Digital Ohm Micrometer	UT620C+	C242921984	AC20250222 0127	22/02/2025

B. Commissioning Tests

APS Plenum 2 ESP Sub-assembly: 5

Item	Test Conductor	P1 (IONIZER)	P2 (IONIZER)	P3 (IONIZER)
1	P4 (IONIZER)	0.09	N.A.	N.A.
2	P5 (IONIZER)	N.A.	0.08	N.A.
3	P6 (IONIZER)	N.A.	N.A.	0.08
4	P7 (IONIZER)	0.08	N.A.	N.A.
5	P8 (IONIZER)	N.A.	0.09	N.A.
6	P9 (IONIZER)	N.A.	N.A.	0.08
7	P10 (IONIZER)	0.08	N.A.	N.A.
8	P11 (IONIZER)	N.A.	0.09	N.A.
9	P12 (IONIZER)	N.A.	N.A.	0.08
10	P13 (IONIZER)	0.08	N.A.	N.A.
11	P14 (IONIZER)	N.A.	0.07	N.A.
12	P15 (IONIZER)	N.A.	N.A.	0.1
13	P16 (IONIZER)	0.08	N.A.	N.A.
14	P17 (IONIZER)	N.A.	0.1	N.A.
15	P18 (IONIZER)	N.A.	N.A.	0.12

According to the manufacture's QC report, the resistance of each ESP cell collector or ionizer (from collector/ionizer plate to busbar terminal) should be less than 0.5 ohm, and the APS ESP busbar resistance should be less than or equal to 0.1 ohm. The total passing resistance for ionizer / collector would be the sum of the resistance of two cells (2 cell * 0.5 ohm) and the resistance of the busbar (0.1 ohm).
Therefore, the passing criteria of ionizer /collector continuity test is under 1.1 ohm.
The passing criteria between frame plate /collector earth plate and earth is under 0.6 ohm.

C. Comment

Tested / Checked by: (Name of CTA Representative)	Name: Ho Tung	Signature: Ho Tung	Date: 28/02/2025
Witnessed by: (Name of JEC Representative)	Name: John Chan	Signature:	Date: 28/02/2025
Witnessed by: (Name of GCL	Name: Raymond Lau	Signature:	Date: 28/02/2025
Witnessed by: (Name of AMTSU	Name: Sam Lui	Signature:	Date: 28/02/2025
Witnessed by: (Name of ZMSD	Name: WONG Cheong Shing CIE/TSC/1	Signature:	Date: 28/02/2025
Witnessed by: (Name of	Name:	Signature:	Date:

Gammon

CTA INTERNATIONAL AS CLEAN TUNNEL AIR

AIR PURIFICATION SYSTEM (APS)
ESP FILTER ELECTRICAL TEST INSPECTION CHECK FORM

T&C for ESP Filter

Project: Contract No. HY/2019/13 Central Kowloon Route - Buildings, Electrical and Mechanical Works

RISC NO.: RISC-SI-030092
Date: 28/02/2025
Room Name: Plenum 2

APS Sub-System : ESP Filter System *
Sub-assembly : ESP filter
Location: YVB / HVB/ KVB *
T&C Plan Ref. No.: J3883-TVS-S-06866
Reference drawing: J3883-TVS-S-01839

Electrical Test - Continuity Test

A. Test instruments

Type	Model	Serial No. of Instrument	Calibration Certificated No.	Date of Calibration
Digital Ohm Micrometer	UT620C+	C242921984	AC2202502220127	22/02/2025

B. Commissioning Tests

APS Plenum 2 ESP Sub-assembly: 5

Item	Test Conductor	P19 (COLLECTOR)
1	P20 (COLLECTOR)	0.06
2	P21 (COLLECTOR)	0.06
3	P22 (COLLECTOR)	0.06
4	P23 (COLLECTOR)	0.07
5	P24 (COLLECTOR)	0.07
6	P25 (COLLECTOR)	0.05
7	P26 (COLLECTOR)	0.09
8	P27 (COLLECTOR)	0.1
9	P28 (COLLECTOR)	0.07
10	P29 (COLLECTOR)	0.12
11	P30 (COLLECTOR)	0.13
12	P31 (COLLECTOR)	0.07
13	P32 (COLLECTOR)	0.13
14	P33 (COLLECTOR)	0.13
15	P34 (COLLECTOR)	0.06
16	P35 (COLLECTOR)	0.14
17	P36 (COLLECTOR)	0.14

Item	Test Conductor	P37 (COLLECTOR EARTH)
18	P38 (COLLECTOR EARTH)	0.01
19	P39 (COLLECTOR EARTH)	0.01
20	P40 (COLLECTOR EARTH)	0.01
21	P41 (COLLECTOR EARTH)	0.01
22	P42 (COLLECTOR EARTH)	0.01
23	P43 (COLLECTOR EARTH)	0.01
24	P44 (COLLECTOR EARTH)	0.01
25	P45 (COLLECTOR EARTH)	0.01
26	P46 (COLLECTOR EARTH)	0.01
27	P47 (COLLECTOR EARTH)	0.01
28	P48 (COLLECTOR EARTH)	0.01
29	P49 (COLLECTOR EARTH)	0.01
30	P50 (COLLECTOR EARTH)	0.01
31	P51 (COLLECTOR EARTH)	0.01
32	P52 (COLLECTOR EARTH)	0.01
33	P53 (COLLECTOR EARTH)	0.01
34	P54 (COLLECTOR EARTH)	0.01
35	P55 (FRAME)	0.01
36	EARTH	0.01

According to the manufacture's QC report, the resistance of each ESP cell collector or ionizer (from collector/ionizer plate to busbar terminal) should be less than 0.5 ohm, and the APS ESP busbar resistance should be less than or equal to 0.1 ohm. The total passing resistance for ionizer / collector would be the sum of the resistance of two cells (2 cell * 0.5 ohm) and the resistance of the busbar (0.1 ohm). Therefore, the passing criteria of ionizer /collector continuity test is under 1.1 ohm.
The passing criteria between frame plate /collector earth plate and earth is under 0.6 ohm.

C. Comment

Tested / Checked by: (Name of CTA Representative)	Name: Ho Tung	Signature: Ho Tung	Date: 28/02/2025
Witnessed by: (Name of JEC Representative)	Name: John Chan	Signature:	Date: 28/02/2025
Witnessed by: (Name of GCL)	Name: Raymond Lau	Signature:	Date: 28/02/2025
Witnessed by: (Name of AMNSV)	Name: Sam Lui	Signature:	Date: 28/02/2025
Witnessed by: (Name of ZMSD)	Name: WONG Cheong Shing CIE/TSC/1	Signature:	Date: 28/02/2025
Witnessed by: (Name of)	Name:	Signature:	Date:

Gammon

CTA INTERNATIONAL AS

T&C for ESP Filter

AIR PURIFICATION SYSTEM (APS)
ESP FILTER ELECTRICAL TEST INSPECTION CHECK FORM

Project: Contract No. HY/2019/13 Central Kowloon Route - Buildings, Electrical and Mechanical Works

RISC NO.: RISC-SI-030093

Date: 2025/02/28

APS Sub-System : ESP Filter System *

Room Name : Plenum 3

Sub-assembly : ESP filter

Location: HVB/ HVB/ KVB *

T&C Plan Ref. No.: J3883-TVS-S-06866

Reference drawing: J3883/MEP/APS/1603&1604&1605

Electrical Test - Continuity Test

A.Test instruments

Type	Model	Serial No. of Instrument	Calibration Certificated No.	Date of Calibration
Digital Ohm Micrometer	UT620C+	C24292984	AC2202502220127	22/02/2025

B. Commissioning Tests

APS Plenum 3 ESP Sub-assembly: 1

Item	Test Conductor	P1 (IONIZER)	P2 (IONIZER)	P3 (IONIZER)
1	P4 (IONIZER)	0.08	N.A.	N.A.
2	P5 (IONIZER)	N.A.	0.07	N.A.
3	P6 (IONIZER)	N.A.	N.A.	0.07
4	P7 (IONIZER)	0.09	N.A.	N.A.
5	P8 (IONIZER)	N.A.	0.07	N.A.
6	P9 (IONIZER)	N.A.	N.A.	0.07
7	P10 (IONIZER)	0.09	N.A.	N.A.
8	P11 (IONIZER)	N.A.	0.07	N.A.
9	P12 (IONIZER)	N.A.	N.A.	0.07
10	P13 (IONIZER)	0.08	N.A.	N.A.
11	P14 (IONIZER)	N.A.	0.07	N.A.
12	P15 (IONIZER)	N.A.	N.A.	0.08
13	P16 (IONIZER)	0.08	N.A.	N.A.
14	P17 (IONIZER)	N.A.	0.07	N.A.
15	P18 (IONIZER)	N.A.	N.A.	0.07

According to the manufacture's QC report, the resistance of each ESP cell collector or ionizer (from collector/ionizer plate to busbar terminal) should be less than 0.5 ohm, and the APS ESP busbar resistance should be less than or equal to 0.1 ohm. The total passing resistance for ionizer / collector would be the sum of the resistance of two cells (2 cell * 0.5 ohm) and the resistance of the busbar (0.1 ohm)
Therefore, the passing criteria of ionizer /collector continuity test is under 1.1 ohm.
The passing criteria between frame plate /collector earth plate and earth is under 0.6 ohm.

C. Comment

Tested / Checked by: (Name of CTA Representative)	Name: Ho Tung	Signature: Ho Tung	Date: 2025/02/28
Witnessed by: (Name of JEC Representative)	Name: John Chan	Signature:	Date: 2025/02/28
Witnessed by: (Name of GICL)	Name: Raymond Lau	Signature:	Date: 2025/02/28
Witnessed by: (Name of AMEC)	Name: Sam Lai	Signature:	Date: 2025/02/28
Witnessed by: (Name of ZNSD)	Name: WONG Cheong Shing CIE/TSC/1	Signature:	Date: 2025/02/28
Witnessed by: (Name of	Name:	Signature:	Date:

Gammon

CTA INTERNATIONAL AS

T&C for ESP Filter

AIR PURIFICATION SYSTEM (APS)
ESP FILTER ELECTRICAL TEST INSPECTION CHECK FORM

Project: Contract No. HY/2019/13 Central Kowloon Route - Buildings, Electrical and Mechanical Works

RISC NO.: RISC-SE-030093

Date: 2025/02/28

APS Sub-System : ESP Filter System *

Room Name : Plenum 3

Sub-assembly : ESP filter

Location: YVB/ HVB/ KVB *

T&C Plan Ref. No.: J3883-TVS-S-06866

Reference drawing: J3883/MEP/APS/1603&1604&1605

Electrical Test - Continuity Test

A. Test instruments

Type	Model	Serial No. of Instrument	Calibration Certificated No.	Date of Calibration
Digital Ohm Micrometer	UT620C+	C242921984	AC2202502220127	22/02/2025

B. Commissioning Tests

APS Plenum 3 ESP Sub-assembly: 1

Item	Test Conductor	P19 (COLLECTOR)
1	P20 (COLLECTOR)	0.06
2	P21 (COLLECTOR)	~~0.09~~ 0.06
3	P22 (COLLECTOR)	0.06
4	P23 (COLLECTOR)	0.08
5	P24 (COLLECTOR)	0.08
6	P25 (COLLECTOR)	0.06
7	P26 (COLLECTOR)	0.09
8	P27 (COLLECTOR)	0.1
9	P28 (COLLECTOR)	0.06
10	P29 (COLLECTOR)	0.1
11	P30 (COLLECTOR)	0.11
12	P31 (COLLECTOR)	0.06
13	P32 (COLLECTOR)	0.12
14	P33 (COLLECTOR)	0.13
15	P34 (COLLECTOR)	0.12
16	P35 (COLLECTOR)	0.05
17	P36 (COLLECTOR)	0.15

Item	Test Conductor	P37 (COLLECTOR EARTH)
18	P38 (COLLECTOR EARTH)	0.01
19	P39 (COLLECTOR EARTH)	0.01
20	P40 (COLLECTOR EARTH)	0.01
21	P41 (COLLECTOR EARTH)	0.01
22	P42 (COLLECTOR EARTH)	0.01
23	P43 (COLLECTOR EARTH)	0.01
24	P44 (COLLECTOR EARTH)	0.01
25	P45 (COLLECTOR EARTH)	0.01
26	P46 (COLLECTOR EARTH)	0.01
27	P47 (COLLECTOR EARTH)	0.01
28	P48 (COLLECTOR EARTH)	0.01
29	P49 (COLLECTOR EARTH)	0.01
30	P50 (COLLECTOR EARTH)	0.01
31	P51 (COLLECTOR EARTH)	0.01
32	P52 (COLLECTOR EARTH)	0.01
33	P53 (COLLECTOR EARTH)	0.01
34	P54 (COLLECTOR EARTH)	0.01
35	P55 (FRAME)	0.01
36	EARTH	0.01

According to the manufacture's QC report, the resistance of each ESP cell collector or ionizer (from collector/ionizer plate to busbar terminal) should be less than 0.5 ohm, and the APS ESP busbar resistance should be less than or equal to 0.1 ohm. The total passing resistance for ionizer / collector would be the sum of the resistance of two cells (2 cell * 0.5 ohm) and the resistance of the busbar (0.1 ohm). Therefore, the passing criteria of ionizer /collector continuity test is under 1.1 ohm.
The passing criteria between frame plate /collector earth plate and earth is under 0.5 ohm.

C. Comment

Tested / Checked by: (Name of CTA Representative)	Name: Ho Tung	Signature: Ho Tung	Date: 2025/02/28
Witnessed by: (Name of JEC Representative)	Name: John Chan	Signature:	Date: 2025/02/28
Witnessed by: (Name of GCL)	Name: Raymond Lau	Signature:	Date: 2025/02/28
Witnessed by: (Name of AMSL)	Name: Sam Lai	Signature:	Date: 2025/02/28
Witnessed by: (Name of ZHSD)	Name: WONG Cheong Shing CIE/TSC/1	Signature:	Date: 2025/02/28
Witnessed by: (Name of)	Name:	Signature:	Date:

Gammon

CTA INTERNATIONAL AS

T&C for ESP Filter

AIR PURIFICATION SYSTEM (APS)
ESP FILTER ELECTRICAL TEST INSPECTION CHECK FORM

Project: Contract No. HY/2019/13 Central Kowloon Route - Buildings, Electrical and Mechanical Works

RISC NO.: RISC-SI-030093

Date: 2025/02/28

APS Sub-System : ESP Filter System *

Room Name : Plenum 3

Sub-assembly : ESP filter

Location: YVB / HVB/ KVB *

T&C Plan Ref. No.: J3883-TVS-S-0466

Reference drawing: J3883/MEP/APS/1603&1604&1605

Electrical Test - Continuity Test

A.Test instruments

Type	Model	Serial No. of Instrument	Calibration Certificated No.	Date of Calibration
Digital Ohm Micrometer	UT620CT	C242921984	AC2502220127	22/02/2025

B. Commissioning Tests

APS Plenum 3 ESP Sub-assembly: 2

Item	Test Conductor	P1 (IONIZER)	P2 (IONIZER)	P3 (IONIZER)
1	P4 (IONIZER)	0.08	N.A.	N.A.
2	P5 (IONIZER)	N.A.	0.07	N.A.
3	P6 (IONIZER)	N.A.	N.A.	0.07
4	P7 (IONIZER)	0.09	N.A.	N.A.
5	P8 (IONIZER)	N.A.	0.13	N.A.
6	P9 (IONIZER)	N.A.	N.A.	0.07
7	P10 (IONIZER)	0.08	N.A.	N.A.
8	P11 (IONIZER)	N.A.	0.08	N.A.
9	P12 (IONIZER)	N.A.	N.A.	0.07
10	P13 (IONIZER)	0.08	N.A.	N.A.
11	P14 (IONIZER)	N.A.	0.08	N.A.
12	P15 (IONIZER)	N.A.	N.A.	0.07
13	P16 (IONIZER)	0.08	N.A.	N.A.
14	P17 (IONIZER)	N.A.	0.07	N.A.
15	P18 (IONIZER)	N.A.	N.A.	0.07

According to the manufacture's QC report, the resistance of each ESP cell collector or ionizer (from collector/ionizer plate to busbar terminal) should be less than 0.5 ohm, and the APS ESP busbar resistance should be less than or equal to 0.1 ohm. The total passing resistance for ionizer / collector would be the sum of the resistance of two cells (2 cell * 0.5 ohm) and the resistance of the busbar (0.1 ohm)
Therefore, the passing criteria of ionizer /collector continuity test is under 1.1 ohm
The passing criteria between frame plate /collector earth plate and earth is under 0.6 ohm

C. Comment

Tested / Checked by: (Name of CTA Representative)	Name: Ho Tung	Signature: Ho Tung	Date: 2025/02/28
Witnessed by: (Name of JEC Representative)	Name: John Chan	Signature:	Date: 2025/02/28
Witnessed by: (Name of GCL	Name: Raymond Lam	Signature:	Date: 2025/02/28
Witnessed by: (Name of AMJV	Name: Sam Li	Signature:	Date: 2025/02/28
Witnessed by: (Name of ZMSD	Name: WONG Cheong Shing CIE/TSC/1	Signature:	Date: 2025/02/28
Witnessed by: (Name of	Name:	Signature:	Date:

Gammon

CTA INTERNATIONAL AS

T&C for ESP Filter

AIR PURIFICATION SYSTEM (APS)
ESP FILTER ELECTRICAL TEST INSPECTION CHECK FORM

Project: Contract No. HY/2019/13 Central Kowloon Route - Buildings, Electrical and Mechanical Works

RISC NO.: RISC_SI_030093

Date: 2025/02/28

APS Sub-System : ESP Filter System *

Room Name : Plenum 3

Sub-assembly : ESP filter

Location: YVB / HVB/ KVB *

T&C Plan Ref. No.: J3883-TVS-S-06866

Reference drawing: J3883/MEP/APS/1603&1604&1605

Electrical Test - Continuity Test

A. Test instruments

Type	Model	Serial No. of Instrument	Calibration Certificated No.	Date of Calibration
Digital Ohm Micrometer	UT620C+	C242921984	ACZ202502220127	22/02/2022

B. Commissioning Tests

APS Plenum 3 ESP Sub-assembly: 2

Item	Test Conductor	P19 (COLLECTOR)
1	P20 (COLLECTOR)	0.06
2	P21 (COLLECTOR)	0.2
3	P22 (COLLECTOR)	0.2
4	P23 (COLLECTOR)	0.06
5	P24 (COLLECTOR)	0.07
6	P25 (COLLECTOR)	0.05
7	P26 (COLLECTOR)	0.09
8	P27 (COLLECTOR)	0.17
9	P28 (COLLECTOR)	0.06
10	P29 (COLLECTOR)	0.19
11	P30 (COLLECTOR)	0.15
12	P31 (COLLECTOR)	0.1
13	P32 (COLLECTOR)	0.13
14	P33 (COLLECTOR)	0.23
15	P34 (COLLECTOR)	0.14
16	P35 (COLLECTOR)	0.3
17	P36 (COLLECTOR)	0.15

Item	Test Conductor	P37 (COLLECTOR EARTH)
18	P38 (COLLECTOR EARTH)	0.01
19	P39 (COLLECTOR EARTH)	0.01
20	P40 (COLLECTOR EARTH)	0.01
21	P41 (COLLECTOR EARTH)	0.01
22	P42 (COLLECTOR EARTH)	0.01
23	P43 (COLLECTOR EARTH)	0.01
24	P44 (COLLECTOR EARTH)	0.01
25	P45 (COLLECTOR EARTH)	0.01
26	P46 (COLLECTOR EARTH)	0.01
27	P47 (COLLECTOR EARTH)	0.01
28	P48 (COLLECTOR EARTH)	0.01
29	P49 (COLLECTOR EARTH)	0.01
30	P50 (COLLECTOR EARTH)	0.01
31	P51 (COLLECTOR EARTH)	0.01
32	P52 (COLLECTOR EARTH)	0.01
33	P53 (COLLECTOR EARTH)	0.01
34	P54 (COLLECTOR EARTH)	0.01
35	P55 (FRAME)	0.01
36	EARTH	0.01

According to the manufacture's QC report, the resistance of each ESP cell collector or ionizer (from collector/ionizer plate to busbar terminal) should be less than 0.5 ohm, and the APS ESP busbar resistance should be less than or equal to 0.1 ohm. The total passing resistance for ionizer / collector would be the sum of the resistance of two cells (2 cell * 0.5 ohm) and the resistance of the busbar (0.1 ohm). Therefore, the passing criteria of ionizer /collector continuity test is under 1.1 ohm.
The passing criteria between frame plate /collector earth plate and earth is under 0.5 ohm.

C. Comment

Tested / Checked by: (Name of CTA Representative)	Name: Ho Tung	Signature: Ho Tung	Date: 2025/02/28
Witnessed by: (Name of JEC Representative)	Name: John Chan	Signature:	Date: 2025/02/28
Witnessed by: (Name of GCL)	Name: Raymond Lau	Signature:	Date: 2025/02/28
Witnessed by: (Name of AMJV)	Name: Sam Lui	Signature:	Date: 2025/02/28
Witnessed by: (Name of ENGD)	Name: WONG Cheong Shing CIE/TSC/I	Signature:	Date: 2025/02/28
Witnessed by: (Name of)	Name:	Signature:	Date:

Gammon

CTA INTERNATIONAL AS

T&C for ESP Filter

AIR PURIFICATION SYSTEM (APS)
ESP FILTER ELECTRICAL TEST INSPECTION CHECK FORM

Project: Contract No. HY/2019/13 Central Kowloon Route - Buildings, Electrical and Mechanical Works

RISC NO.: RISL-ST-030093

Date: 2025/02/28

APS Sub-System : ESP Filter System * ~~[illegible]~~

Room Name : Plenum 3

Sub-assembly : ~~J3883-TVS-S-06~~ ESP filter

Location: ~~KVB~~ / HVB/ KVB *

T&C Plan Ref. No.: J3883-TVS-S-06666

Reference drawing: J3883/MEP/APS/1603&1604&1605

Electrical Test - Continuity Test

A.Test instruments

Type	Model	Serial No. of Instrument	Calibration Certificated No.	Date of Calibration
Digital Ohm Micrometer	UT620C+	C242421984	AC220250222012 7	22/02/2025

B. Commissioning Tests

APS Plenum 3 ESP Sub-assembly: 3

Item	Test Conductor	P1 (IONIZER)	P2 (IONIZER)	P3 (IONIZER)
1	P4 (IONIZER)	0.23	N.A.	N.A.
2	P5 (IONIZER)	N.A.	0.12	N.A.
3	P6 (IONIZER)	N.A.	N.A.	0.14
4	P7 (IONIZER)	0.1	N.A.	N.A.
5	P8 (IONIZER)	N.A.	0.07	N.A.
6	P9 (IONIZER)	N.A.	N.A.	0.09
7	P10 (IONIZER)	0.09	N.A.	N.A.
8	P11 (IONIZER)	N.A.	0.08	N.A.
9	P12 (IONIZER)	N.A.	N.A.	0.16
10	P13 (IONIZER)	0.09	N.A.	N.A.
11	P14 (IONIZER)	N.A.	0.08	N.A.
12	P15 (IONIZER)	N.A.	N.A.	0.17
13	P16 (IONIZER)	0.23	N.A.	N.A.
14	P17 (IONIZER)	N.A.	0.08	N.A.
15	P18 (IONIZER)	N.A.	N.A.	0.16

According to the manufacture's QC report, the resistance of each ESP cell collector or ionizer (from collector/ionizer plate to busbar terminal) should be less than 0.5 ohm, and the APS ESP busbar resistance should be less than or equal to 0.1 ohm. The total passing resistance for ionizer / collector would be the sum of the resistance of two cells (2 cell * 0.5 ohm) and the resistance of the busbar (0.1 ohm)
Therefore, the passing criteria of ionizer /collector continuity test is under 1.1 ohm
The passing criteria between frame plate /collector earth plate and earth is under 0.6 ohm.

C. Comment

Tested / Checked by: (Name of CTA Representative)	Name: Ho Tung	Signature: Ho Tung	Date: 2025/02/28
Witnessed by: (Name of JEC Representative)	Name: John Chan	Signature:	Date: 2025/02/28
Witnessed by: (Name of GCL)	Name: Raymond Lau	Signature:	Date: 2025/02/28
Witnessed by: (Name of AMNTSU)	Name: Sam Lee	Signature:	Date: 2025/02/28
Witnessed by: (Name of ZMSD)	Name: WONG Cheong Shing CIE/TSC/1	Signature:	Date: 2025/02/28
Witnessed by: (Name of	Name:	Signature:	Date:

Gammon

CTA INTERNATIONAL AS

AIR PURIFICATION SYSTEM (APS)
ESP FILTER ELECTRICAL TEST INSPECTION CHECK FORM

T&C for ESP Filter

Project: Contract No. HY/2019/13 Central Kowloon Route - Buildings, Electrical and Mechanical Works

RISC NO.: RISC-SI-030093

Date: 2025/02/28

APS Sub-System : ESP Filter System *

Room Name : Plenum 3

Sub-assembly : ESP Filter

Location: (YVB) / HVB/ KVB *

T&C Plan Ref. No.: J3883-TVS-S-06866

Reference drawing: J3883/MEP/APS/1603&1604&1605

Electrical Test - Continuity Test

A. Test instruments

Type	Model	Serial No. of Instrument	Calibration Certificated No.	Date of Calibration
Digital Ohm Micrometer	UT620CT	C242921984	AC2202502220127	22/02/2025

B. Commissioning Tests

APS Plenum 3 ESP Sub-assembly: 3

Item	Test Conductor	P19 (COLLECTOR)
1	P20 (COLLECTOR)	0.06
2	P21 (COLLECTOR)	0.13
3	P22 (COLLECTOR)	0.12
4	P23 (COLLECTOR)	0.01
5	P24 (COLLECTOR)	0.07
6	P25 (COLLECTOR)	0.05
7	P26 (COLLECTOR)	0.09
8	P27 (COLLECTOR)	0.12
9	P28 (COLLECTOR)	0.06
10	P29 (COLLECTOR)	0.14
11	P30 (COLLECTOR)	0.11
12	P31 (COLLECTOR)	0.06
13	P32 (COLLECTOR)	0.13
14	P33 (COLLECTOR)	0.06
15	P34 (COLLECTOR)	0.05
16	P35 (COLLECTOR)	0.2
17	P36 (COLLECTOR)	0.08

Item	Test Conductor	P37 (COLLECTOR EARTH)
18	P38 (COLLECTOR EARTH)	0.01
19	P39 (COLLECTOR EARTH)	0.01
20	P40 (COLLECTOR EARTH)	0.01
21	P41 (COLLECTOR EARTH)	0.01
22	P42 (COLLECTOR EARTH)	0.01
23	P43 (COLLECTOR EARTH)	0.01
24	P44 (COLLECTOR EARTH)	0.01
25	P45 (COLLECTOR EARTH)	0.01
26	P46 (COLLECTOR EARTH)	0.01
27	P47 (COLLECTOR EARTH)	0.01
28	P48 (COLLECTOR EARTH)	0.01
29	P49 (COLLECTOR EARTH)	0.01
30	P50 (COLLECTOR EARTH)	0.01
31	P51 (COLLECTOR EARTH)	0.01
32	P52 (COLLECTOR EARTH)	0.01
33	P53 (COLLECTOR EARTH)	0.01
34	P54 (COLLECTOR EARTH)	0.01
35	P55 (FRAME)	0.01
36	EARTH	0.01

According to the manufacture's QC report, the resistance of each ESP cell collector or ionizer (from collector/ionizer plate to busbar terminal) should be less than 0.5 ohm, and the APS ESP busbar resistance should be less than or equal to 0.1 ohm. The total passing resistance for Ionizer / collector would be the sum of the resistance of two cells (2 cell * 0.5 ohm) and the resistance of the busbar (0.1 ohm). Therefore, the passing criteria of Ionizer /collector continuity test is under 1.1 ohm.
The passing criteria between frame plate /collector earth plate and earth is under 0.5 ohm.

C. Comment

Tested / Checked by: (Name of CTA Representative)	Name: Ho Tung	Signature: Ho Tung	Date: 2025/02/28
Witnessed by: (Name of JEC Representative)	Name: John Chan	Signature:	Date: 2025/02/28
Witnessed by: (Name of GCL)	Name: Raymond Lau	Signature:	Date: 2025/02/28
Witnessed by: (Name of AMMSC)	Name: Sam Lui	Signature:	Date: 2025/02/28
Witnessed by: (Name of EMSD)	Name: WONG Cheong Shing CIE/TSC/1	Signature:	Date: 2025/02/28
Witnessed by: (Name of)	Name:	Signature:	Date:

Gammon

CTA INTERNATIONAL AS

T&C for ESP Filter

AIR PURIFICATION SYSTEM (APS)
ESP FILTER ELECTRICAL TEST INSPECTION CHECK FORM

Project: Contract No. HY/2019/13 Central Kowloon Route - Buildings, Electrical and Mechanical Works

RISC NO.: RISC-SI-030093

Date: 2025/02/28

APS Sub-System : ESP Filter System *

Room Name : Plenum 3

Sub-assembly : ESP Filter

Location: KVB / HVB/ KVB *

T&C Plan Ref. No.: J3883-TUS-S-0686

Reference drawing: J3883/MEP/APS/1603&1604&1605

Electrical Test - Continuity Test

A.Test instruments

Type	Model	Serial No. of Instrument	Calibration Certificated No.	Date of Calibration
Digital Ohm Micrometer	UT620C+	C242421984	ACZ20250222012	22/02/2025

B. Commissioning Tests

APS Plenum 3 ESP Sub-assembly: 4

Item	Test Conductor	P1 (IONIZER)	P2 (IONIZER)	P3 (IONIZER)
1	P4 (IONIZER)	0.13	N.A.	N.A.
2	P5 (IONIZER)	N.A.	0.24	N.A.
3	P6 (IONIZER)	N.A.	N.A.	0.09
4	P7 (IONIZER)	0.12	N.A.	N.A.
5	P8 (IONIZER)	N.A.	0.07	N.A.
6	P9 (IONIZER)	N.A.	N.A.	0.07
7	P10 (IONIZER)	0.12	N.A.	N.A.
8	P11 (IONIZER)	N.A.	0.08	N.A.
9	P12 (IONIZER)	N.A.	N.A.	0.07
10	P13 (IONIZER)	0.09	N.A.	N.A.
11	P14 (IONIZER)	N.A.	0.08	N.A.
12	P15 (IONIZER)	N.A.	N.A.	0.08
13	P16 (IONIZER)	0.08	N.A.	N.A.
14	P17 (IONIZER)	N.A.	0.08	N.A.
15	P18 (IONIZER)	N.A.	N.A.	0.12

According to the manufacture's QC report, the resistance of each ESP cell collector or ionizer (from collector/ionizer plate to busbar terminal) should be less than 0.5 ohm, and the APS ESP busbar resistance should be less than or equal to 0.1 ohm. The total passing resistance for ionizer / collector would be the sum of the resistance of two cells (2 cell * 0.5 ohm) and the resistance of the busbar (0.1 ohm)
Therefore, the passing criteria of ionizer /collector continuity test is under 1.1 ohm
The passing criteria between frame plate /collector earth plate and earth is under 0.6 ohm

C. Comment

Tested / Checked by: (Name of CTA Representative)	Name: Ho Tung	Signature: Ho Tung	Date: 2025/02/28
Witnessed by: (Name of JEC Representative)	Name: John Chan	Signature:	Date: 2025/02/28
Witnessed by: (Name of GCL	Name: Raymond Lau	Signature:	Date: 2025/02/28
Witnessed by: (Name of AMUSL	Name: Sam Li	Signature:	Date: 2025/02/28
Witnessed by: (Name of ZMSD	Name: WONG Cheong Shing CIE/TSC/1	Signature:	Date: 2025/02/28
Witnessed by: (Name of	Name:	Signature:	Date:

Gammon

CTA INTERNATIONAL AS

AIR PURIFICATION SYSTEM (APS)
ESP FILTER ELECTRICAL TEST INSPECTION CHECK FORM

T&C for ESP Filter

Project: Contract No. HY/2019/13 Central Kowloon Route - Buildings, Electrical and Mechanical Works

RISC NO.: RCSC-SI-030093

Date: 2025/02/28

APS Sub-System : ESP Filter System *

Room Name : Plenum 3

Sub-assembly : ESP filter

Location: YVB / HVB / KVB *

T&C Plan Ref. No.: J3883-TVS-S-06866

Reference drawing: J3883/MEP/APS/1603&1604&1605

Electrical Test - Continuity Test

A. Test instruments

Type	Model	Serial No. of Instrument	Calibration Certificated No.	Date of Calibration
Digital Ohm Micrometer	UT620C+	C242021984	ACZ202502220127	22/02/2025

B. Commissioning Tests

APS Plenum 3 ESP Sub-assembly: 4

Item	Test Conductor	P19 (COLLECTOR)
1	P20 (COLLECTOR)	0.06
2	P21 (COLLECTOR)	~~0.0~~ 0.12
3	P22 (COLLECTOR)	0.14
4	P23 (COLLECTOR)	0.12
5	P24 (COLLECTOR)	0.07
6	P25 (COLLECTOR)	0.05
7	P26 (COLLECTOR)	0.09
8	P27 (COLLECTOR)	0.14
9	P28 (COLLECTOR)	0.06
10	P29 (COLLECTOR)	0.15
11	P30 (COLLECTOR)	0.12
12	P31 (COLLECTOR)	0.18
13	P32 (COLLECTOR)	0.25
14	P33 (COLLECTOR)	0.16
15	P34 (COLLECTOR)	0.06
16	P35 (COLLECTOR)	0.06
17	P36 (COLLECTOR)	0.06

Item	Test Conductor	P37 (COLLECTOR EARTH)
18	P38 (COLLECTOR EARTH)	0.01
19	P39 (COLLECTOR EARTH)	0.01
20	P40 (COLLECTOR EARTH)	0.01
21	P41 (COLLECTOR EARTH)	0.01
22	P42 (COLLECTOR EARTH)	0.01
23	P43 (COLLECTOR EARTH)	0.01
24	P44 (COLLECTOR EARTH)	0.01
25	P45 (COLLECTOR EARTH)	0.01
26	P46 (COLLECTOR EARTH)	0.01
27	P47 (COLLECTOR EARTH)	0.01
28	P48 (COLLECTOR EARTH)	0.01
29	P49 (COLLECTOR EARTH)	0.01
30	P50 (COLLECTOR EARTH)	0.01
31	P51 (COLLECTOR EARTH)	0.01
32	P52 (COLLECTOR EARTH)	0.01
33	P53 (COLLECTOR EARTH)	0.01
34	P54 (COLLECTOR EARTH)	0.01
35	P55 (FRAME)	0.01
36	EARTH	0.01

According to the manufacture's QC report, the resistance of each ESP cell collector or ionizer (from collector/ionizer plate to busbar terminal) should be less than 0.5 ohm, and the APS ESP busbar resistance should be less than or equal to 0.1 ohm. The total passing resistance for ionizer / collector would be the sum of the resistance of two cells (2 cell * 0.5 ohm) and the resistance of the busbar (0.1 ohm). Therefore, the passing criteria of ionizer /collector continuity test is under 1.1 ohm.
The passing criteria between frame plate /collector earth plate and earth is under 0.5 ohm.

C. Comment

Tested / Checked by: (Name of CTA Representative)	Name: Ho Tung	Signature: Ho Tung	Date: 2025/02/28
Witnessed by: (Name of JEC Representative)	Name: John Chan	Signature:	Date: 2025/02/28
Witnessed by: (Name of GCL)	Name: Raymond Law	Signature:	Date: 2025/02/28
Witnessed by: (Name of AMMJV)	Name: Sam Lui	Signature:	Date: 2025/02/28
Witnessed by: (Name of EMSD)	Name: WONG Cheong Shing CIE/TSC/1	Signature:	Date: 2025/02/28
Witnessed by: (Name of)	Name:	Signature:	Date:

Gammon

CIA INTERNATIONAL AS

T&C for ESP Filter

AIR PURIFICATION SYSTEM (APS)
ESP FILTER ELECTRICAL TEST INSPECTION CHECK FORM

Project: Contract No. HY/2019/13 Central Kowloon Route - Buildings, Electrical and Mechanical Works

RISC NO.: RISC-SI_030093

Date: 2025/02/28

APS Sub-System : ESP Filter System *

Room Name : Plenum 3

Sub-assembly : ESP filter

Location: TVB / HVB/ KVB *

T&C Plan Ref. No.: J3883-TVS-S-06866

Reference drawing: J3883/MEP/APS/1603&1604&1605

Electrical Test - Continuity Test

A.Test instruments

Type	Model	Serial No. of Instrument	Calibration Certificated No.	Date of Calibration
Digital Ohm Micrometer	UT620CT	C242921984	A(2)202502220127	22/02/2025

B. Commissioning Tests

APS Plenum 3 ESP Sub-assembly: 5

Item	Test Conductor	P1 (IONIZER)	P2 (IONIZER)	P3 (IONIZER)
1	P4 (IONIZER)	0.08	N.A.	N.A.
2	P5 (IONIZER)	N.A.	0.1	N.A.
3	P6 (IONIZER)	N.A.	N.A.	0.07
4	P7 (IONIZER)	0.08	N.A.	N.A.
5	P8 (IONIZER)	N.A.	0.08	N.A.
6	P9 (IONIZER)	N.A.	N.A.	0.07
7	P10 (IONIZER)	0.09	N.A.	N.A.
8	P11 (IONIZER)	N.A.	0.08	N.A.
9	P12 (IONIZER)	N.A.	N.A.	0.08
10	P13 (IONIZER)	0.08	N.A.	N.A.
11	P14 (IONIZER)	N.A.	0.08	N.A.
12	P15 (IONIZER)	N.A.	N.A.	0.08
13	P16 (IONIZER)	0.08	N.A.	N.A.
14	P17 (IONIZER)	N.A.	0.07	N.A.
15	P18 (IONIZER)	N.A.	N.A.	0.08

According to the manufacture's QC report, the resistance of each ESP cell collector or ionizer (from collector/ionizer plate to busbar terminal) should be less than 0.5 ohm, and the APS ESP busbar resistance should be less than or equal to 0.1 ohm. The total passing resistance for ionizer / collector would be the sum of the resistance of two cells (2 cell * 0.5 ohm) and the resistance of the busbar (0.1 ohm)
Therefore, the passing criteria of ionizer /collector continuity test is under 1.1 ohm
The passing criteria between frame plate /collector earth plate and earth is under 0.6 ohm.

C. Comment

Tested / Checked by: (Name of CTA Representative)	Name: Ho Tung	Signature: Ho Tung	Date: 2025/02/28
Witnessed by: (Name of JEC Representative)	Name: John Chan	Signature:	Date: 2025/02/28
Witnessed by: (Name of GCL)	Name: Raymond Lau	Signature:	Date: 2025/02/28
Witnessed by: (Name of AMASV)	Name: Sam Lui	Signature:	Date: 2025/02/28
Witnessed by: (Name of EMSD)	Name: WONG Cheong Shing CIE/TSC/1	Signature:	Date: 2025/02/28
Witnessed by: (Name of	Name:	Signature:	Date:

Gammon

CTA INTERNATIONAL AS

AIR PURIFICATION SYSTEM (APS)
ESP FILTER ELECTRICAL TEST INSPECTION CHECK FORM

T&C for ESP Filter

Project:	Contract No. HY/2019/13 Central Kowloon Route - Buildings, Electrical and Mechanical Works	RISC NO.:	RISC-SI-030093
		Date:	2025/02/28
APS Sub-System :	ESP Filter System *	Room Name :	Plenum 3
Sub-assembly :	ESP filter		
Location:	YVB / HVB/ KVB *		
T&C Plan Ref. No.:	J3883-TVS-S-06866		
Reference drawing:	J3883/MEP/APS/1603&1604&1605		

Electrical Test - Continuity Test

A. Test instruments

Type	Model	Serial No. of Instrument	Calibration Certificated No.	Date of Calibration
Digital Ohm Micrometer	UT620C+	C247021984	AC2025022220127	22/02/2025

B. Commissioning Tests

APS Plenum 3 ESP Sub-assembly: 5

Item	Test Conductor	P19 (COLLECTOR)
1	P20 (COLLECTOR)	0.06
2	P21 (COLLECTOR)	0.14
3	P22 (COLLECTOR)	0.16
4	P23 (COLLECTOR)	0.15
5	P24 (COLLECTOR)	0.07
6	P25 (COLLECTOR)	0.05
7	P26 (COLLECTOR)	0.15
8	P27 (COLLECTOR)	0.24
9	P28 (COLLECTOR)	0.09
10	P29 (COLLECTOR)	0.27
11	P30 (COLLECTOR)	0.26
12	P31 (COLLECTOR)	0.17
13	P32 (COLLECTOR)	0.06
14	P33 (COLLECTOR)	0.17
15	P34 (COLLECTOR)	0.2
16	P35 (COLLECTOR)	0.08
17	P36 (COLLECTOR)	0.08

Item	Test Conductor	P37 (COLLECTOR EARTH)
18	P38 (COLLECTOR EARTH)	0.01
19	P39 (COLLECTOR EARTH)	0.01
20	P40 (COLLECTOR EARTH)	0.01
21	P41 (COLLECTOR EARTH)	0.01
22	P42 (COLLECTOR EARTH)	0.01
23	P43 (COLLECTOR EARTH)	0.01
24	P44 (COLLECTOR EARTH)	0.01
25	P45 (COLLECTOR EARTH)	0.01
26	P46 (COLLECTOR EARTH)	0.01
27	P47 (COLLECTOR EARTH)	0.01
28	P48 (COLLECTOR EARTH)	0.01
29	P49 (COLLECTOR EARTH)	0.01
30	P50 (COLLECTOR EARTH)	0.01
31	P51 (COLLECTOR EARTH)	0.01
32	P52 (COLLECTOR EARTH)	0.01
33	P53 (COLLECTOR EARTH)	0.01
34	P54 (COLLECTOR EARTH)	0.01
35	P55 (FRAME)	0.01
36	EARTH	0.01

According to the manufacture's QC report, the resistance of each ESP cell collector or ionizer (from collector/ionizer plate to busbar terminal) should be less than 0.5 ohm, and the APS ESP busbar resistance should be less than or equal to 0.1 ohm. The total passing resistance for ionizer / collector would be the sum of the resistance of two cells (2 cell * 0.5 ohm) and the resistance of the busbar (0.1 ohm). Therefore, the passing criteria of ionizer /collector continuity test is under 1.1 ohm.
The passing criteria between frame plate /collector earth plate and earth is under 0.6 ohm.

C. Comment

Tested / Checked by: (Name of CTA Representative)	Name: Ho Tung	Signature: Ho Tung	Date: 2025/02/28
Witnessed by: (Name of JEC Representative)	Name: John Chan	Signature:	Date: 2025/02/28
Witnessed by: (Name of GCL)	Name: Raymond Lam	Signature:	Date: 2025/02/28
Witnessed by: (Name of AMMJV)	Name: Sam Lee	Signature:	Date: 2025/02/28
Witnessed by: (Name of EMSD)	Name: WONG Cheong Shing CIE/TSC/I	Signature:	Date: 2025/02/28
Witnessed by: (Name of)	Name:	Signature:	Date:

Appendix C2 – Site Acceptance Test (SAT) Reports for HVB ESP Filters

Gammon

CTA INTERNATIONAL AS CLEAN TUNNEL AIR

AIR PURIFICATION SYSTEM (APS)
ESP FILTER 1ST FIXING INSPECTION CHECK FORM

T&C for ESP Filter

Project:	Contract No. HY/2019/13 Central Kowloon Route - Buildings, Electrical and Mechanical Works	RISC NO.:	033286A
		Date:	28 Oct 2025
APS Sub-System :	ESP Filter System *	Room Name :	Plenum 1
Location:	~~YVB~~ / HVB/ ~~KVB~~ *		
T&C Plan Ref. No.:	J3883-TVS-S-02893		
Reference drawing:	J3883-TVS-D-01839		

A. ESP Cells Serial No. test form

Sub-assembly : A

Brand Name : CTA

Model No.: CTA ESP

Items	Location		ESP Cell Serial no.
	Column	Row	
1)	1	1	0388002324 090873
2)	1	2	0388002324 080816
3)	1	3	0388002324 080852
4)	1	4	0388002324 090917
5)	1	5	0388002324 091003
6)	1	6	0388002324 090890
7)	2	1	0388002324 090878
8)	2	2	0388002324 090968
9)	2	3	0388002324 090929
10)	2	4	0388002324 091009
11)	2	5	0388002324 090926
12)	2	6	0388002324 080856
13)	3	1	0388002324 080860
14)	3	2	0388002324 090965
15)	3	3	0388002324 090900
16)	3	4	0388002324 091001
17)	3	5	0388002324 090925
18)	3	6	0388002324 090872

B. Comment

Tested / Checked by: (Name of CTA Representative)	Name: Johnny Kwang	Signature:	Date: 28/10/25
Witnessed by: (Name of JEC Representative)	Name: John Chen	Signature:	Date: 28/10/25
Witnessed by: (Name of BCL)	Name: Crystal Cheung	Signature: Lok	Date: 28/10/25
Witnessed by: (Name of AHMJV)	Name: Anthony LAM	Signature: Anthony	Date: 28/10/25
Witnessed by: (Name of)	Name:	Signature:	Date:
Witnessed by: (Name of)	Name:	Signature:	Date:

Gammon

CTA INTERNATIONAL AS CLEAN TUNNEL AIR

AIR PURIFICATION SYSTEM (APS)
ESP FILTER 1ST FIXING INSPECTION CHECK FORM

T&C for ESP Filter

Project:	Contract No. HY/2019/13 Central Kowloon Route - Buildings, Electrical and Mechanical Works	RISC NO.:	033286A
		Date:	28 Oct 2025
APS Sub-System :	ESP Filter System *	Room Name :	Plenum 1
Location:	~~YVB~~ / HVB/ ~~KVB~~ *		
T&C Plan Ref. No.:	J3883-TVS-S-02893		
Reference drawing:	J3883-TVS-D-01839		

A. ESP Cells Serial No. test form

Sub-assembly : B

Brand Name : CTA

Model No.: CTA ESP

Items	Location		ESP Cell Serial no.
	Column	Row	
1)	1	1	0388002324 090930
2)	1	2	0388002324 090903
3)	1	3	0388002324 080859
4)	1	4	0388002324 090932
5)	1	5	0388002324 090918
6)	1	6	0388002324 080839
7)	2	1	0388002324 090928
8)	2	2	0388002324 101025
9)	2	3	0388002324 101021
10)	2	4	0388002324 090994
11)	2	5	0388002324 090956
12)	2	6	0388002324 080842
13)	3	1	0388002324 101017
14)	3	2	0388002324 080867
15)	3	3	0388002324 101024
16)	3	4	0388002324 090909
17)	3	5	0388002324 090995
18)	3	6	0388002324 090955

B. Comment

Tested / Checked by: (Name of CTA Representative)	Name: Johnny Kwang	Signature:	Date: 28/10/25
Witnessed by: (Name of JEC Representative)	Name: John Chan	Signature:	Date: 28/10/25
Witnessed by: (Name of ACE)	Name: Crystal Cheung	Signature:	Date: 28/10/25
Witnessed by: (Name of OHHJV)	Name: Anthu LAM	Signature:	Date: 28/10/25
Witnessed by: (Name of)	Name:	Signature:	Date:
Witnessed by: (Name of)	Name:	Signature:	Date:

Gammon

CTA INTERNATIONAL AS CLEAN TUNNEL AIR

AIR PURIFICATION SYSTEM (APS)
ESP FILTER 1ST FIXING INSPECTION CHECK FORM

T&C for ESP Filter

Project:	Contract No. HY/2019/13 Central Kowloon Route - Buildings, Electrical and Mechanical Works	RISC NO.:	033286A
		Date:	28 Oct 2025
APS Sub-System :	ESP Filter System *	Room Name :	Plenum 1
Location:	~~YVB~~ / HVB/ ~~KVB~~ *		
T&C Plan Ref. No.:	J3883-TVS-S-02893		
Reference drawing:	J3883-TVS-D-01839		

A. ESP Cells Serial No. test form

Sub-assembly : C

Brand Name : CTA

Model No.: CTA ESP

Items	Location		ESP Cell Serial no.
	Column	Row	
1)	1	1	0388002324 101013
2)	1	2	0388002324 090919
3)	1	3	0388002324 090938
4)	1	4	0388002324 091010
5)	1	5	0388002324 101016
6)	1	6	0388002324 091008
7)	2	1	0388002324 090986
8)	2	2	0388002324 091002
9)	2	3	0388002324 091942
10)	2	4	0388002324 091000
11)	2	5	0388002324 101015
12)	2	6	0388002324 091007
13)	3	1	0388002324 090911
14)	3	2	0388002324 090920
15)	3	3	0388002324 090958
16)	3	4	0388002324 090910
17)	3	5	0388002324 090982
18)	3	6	0388002324 090981

B. Comment

Tested / Checked by: (Name of CTA Representative)	Name: Johnny Kuang	Signature:	Date: 28/10/25
Witnessed by: (Name of JEC Representative)	Name: John Chan	Signature:	Date: 28/10/25
Witnessed by: (Name of GCL)	Name: Crystal Chong	Signature: Lok	Date: 28/10/25
Witnessed by: (Name of AHMJV)	Name: Anthony LAM	Signature: Anthony	Date: 28/10/25
Witnessed by: (Name of)	Name:	Signature:	Date:
Witnessed by: (Name of)	Name:	Signature:	Date:

Gammon

CTA INTERNATIONAL AS CLEAN TUNNEL AIR

AIR PURIFICATION SYSTEM (APS)
ESP FILTER 1ST FIXING INSPECTION CHECK FORM

T&C for ESP Filter

Project:	Contract No. HY/2019/13 Central Kowloon Route - Buildings, Electrical and Mechanical Works	RISC NO.:	033286A
		Date:	28 Oct 2025
APS Sub-System :	ESP Filter System *	Room Name :	Plenum 1
Location:	~~YVB~~ / HVB/ ~~KVB~~ *		
T&C Plan Ref. No.:	J3883-TVS-S-02893		
Reference drawing:	J3883-TVS-D-01839		

A. ESP Cells Serial No. test form

Sub-assembly : D

Brand Name : CTA

Model No.: CTA ESP

Items	Location		ESP Cell Serial no.
	Column	Row	
1)	1	1	0388002324 090997
2)	1	2	0388002324 090984
3)	1	3	0388002324 090905
4)	1	4	0388002324 090948
5)	1	5	0388002324 090954
6)	1	6	0388002324 091004
7)	2	1	0388002324 090998
8)	2	2	0388002324 090937
9)	2	3	0388002324 090991
10)	2	4	0388002324 090949
11)	2	5	0388002324 080840
12)	2	6	0388002324 090916
13)	3	1	0388002324 090992
14)	3	2	0388002324 090927
15)	3	3	0388002324 090891
16)	3	4	0388002324 101018
17)	3	5	0388002324 090875
18)	3	6	0388002324 090921

B. Comment

Tested / Checked by: (Name of CTA Representative)	Name: Johnny Kwang	Signature:	Date: 28/10/25
Witnessed by: (Name of JEC Representative)	Name: John Chan	Signature:	Date: 28/10/25
Witnessed by: (Name of GCL)	Name: Crystal Cheung	Signature: Loki	Date: 28/10/25
Witnessed by: (Name of AMHJV)	Name: Anthony LAM	Signature: Anthony	Date: 28/10/25
Witnessed by: (Name of)	Name:	Signature:	Date:
Witnessed by: (Name of)	Name:	Signature:	Date:

Gammon

CTA INTERNATIONAL AS CLEAN TUNNEL AIR

AIR PURIFICATION SYSTEM (APS)
ESP FILTER 1ST FIXING INSPECTION CHECK FORM

T&C for ESP Filter

Project:	Contract No. HY/2019/13 Central Kowloon Route - Buildings, Electrical and Mechanical Works	RISC NO.:	033286A
		Date:	28 Oct 2025
APS Sub-System :	ESP Filter System *	Room Name :	Plenum
Location:	~~YVB~~ / HVB/ ~~KVB~~ *		
T&C Plan Ref. No.:	J3883-TVS-S-02893		
Reference drawing:	J3883-TVS-D-01839		

A. ESP Cells Serial No. test form

Sub-assembly : E

Brand Name : CTA

Model No.: CTA ESP

Items	Location		ESP Cell Serial no.
	Column	Row	
1)	1	1	0388002324 090978
2)	1	2	0388002324 080866
3)	1	3	0388002324 090899
4)	1	4	0388002324 080865
5)	1	5	0388002324 090973
6)	1	6	0388002324 090881
7)	2	1	0388002324 080782
8)	2	2	0388002324 090880
9)	2	3	0388002324 080848
10)	2	4	0388002324 090972
11)	2	5	0388002324 090961
12)	2	6	0388002324 090988
13)	3	1	0388002324 090957
14)	3	2	0388002324 080762
15)	3	3	0388002324 090945
16)	3	4	0388002324 101019
17)	3	5	0388002324 090974
18)	3	6	0388002324 090989

B. Comment

Tested / Checked by: (Name of CTA Representative)	Name: Johnny Kuang	Signature:	Date: 28/10/25
Witnessed by: (Name of JEC Representative)	Name: John Chen	Signature:	Date: 28/10/25
Witnessed by: (Name of GCL)	Name: Crystal Chang	Signature:	Date: 28/10/25
Witnessed by: (Name of AMHSV)	Name: Anthony LAM	Signature:	Date: 28/10/25
Witnessed by: (Name of)	Name:	Signature:	Date:
Witnessed by: (Name of)	Name:	Signature:	Date:

Gammon

CTA INTERNATIONAL AS CLEAN TUNNEL AIR

AIR PURIFICATION SYSTEM (APS)

T&C for ESP Filter

ESP FILTER ELECTRICAL TEST INSPECTION CHECK FORM

Project:	Contract No. HY/2019/13 Central Kowloon Route - Buildings, Electrical and Mechanical Works	RISC NO.:	35146A
		Date:	15/7/2025
APS Sub-System :	ESP Filter System *	Room Name :	Plenum 1
Sub-assembly :	ESP Filter		
Location:	YVB / HVB / KVB *		
T&C Plan Ref. No.:	J3883-TVS-S-06866		
Reference drawing:	J3883-TVS-D-01839		

Electrical Test - Continuity Test

A.Test instruments

Type	Model	Serial No. of Instrument	Calibration Certificated No.	Date of Calibration
Multimeter	KEW6010B	E0233986	CSC248859	15/11/2024

B. Commissioning Tests

APS Plenum _____1_____ ESP Sub-assembly: _____1_____

Item	Test Conductor	P1 (IONIZER) (ohm) (+)	P2 (IONIZER) (ohm) (+)	P3 (IONIZER) (ohm) (+)
1	P4 (IONIZER)	0.58	N.A.	N.A.
2	P5 (IONIZER)	N.A.	0.57	N.A.
3	P6 (IONIZER)	N.A.	N.A.	0.51
4	P7 (IONIZER)	0.57	N.A.	N.A.
5	P8 (IONIZER)	N.A.	0.60	N.A.
6	P9 (IONIZER)	N.A.	N.A.	0.54
7	P10 (IONIZER)	0.55	N.A.	N.A.
8	P11 (IONIZER)	N.A.	0.58	N.A.
9	P12 (IONIZER)	N.A.	N.A.	0.69
10	P13 (IONIZER)	0.58	N.A.	N.A.
11	P14 (IONIZER)	N.A.	0.68	N.A.
12	P15 (IONIZER)	N.A.	N.A.	0.51
13	P16 (IONIZER)	0.76	N.A.	N.A.
14	P17 (IONIZER)	N.A.	0.53	N.A.
15	P18 (IONIZER)	N.A.	N.A.	0.64

According to the manufacture's QC report, the resistance of each ESP cell collector or ionizer (from collector/ionizer plate to busbar terminal) should be less than 0.5 ohm, and the APS ESP busbar resistance should be less than or equal to 0.1 ohm. The total passing resistance for ionizer / collector would be the sum of the resistance of two cells (2 cell * 0.5 ohm) and the resistance of the busbar (0.1 ohm).
Therefore, the passing criteria of ionizer /collector continuity test is under 1.1 ohm.
The passing criteria between frame plate /collector earth plate and earth is under 0.6 ohm.

C. Comment

Tested / Checked by: (Name of CTA Representative)	Name: HO TUNG	Signature: Ho Tung	Date: 15/07/2025
Witnessed by: (Name of JEC Representative)	Name: John Chan	Signature:	Date: 15/07/2025
Witnessed by: (Name of GCL	Name: Boris Yan	Signature:	Date: 15/07/2025
Witnessed by: (Name of AMMJV	Name: Andy Tang	Signature: Andy Tang	Date: 15/07/2025

Gammon

CTA INTERNATIONAL AS CLEAN TUNNEL AIR

AIR PURIFICATION SYSTEM (APS)

T&C for ESP Filter

ESP FILTER ELECTRICAL TEST INSPECTION CHECK FORM

Project:	Contract No. HY/2019/13 Central Kowloon Route - Buildings, Electrical and Mechanical Works	RISC NO.:	35146A
		Date:	15/7/2025
APS Sub-System :	ESP Filter System *	Room Name :	Plenum 1
Sub-assembly :	ESP Filter		
Location:	YVB / HVB / KVB *		
T&C Plan Ref. No.:	J3883-TVS-S-06866		
Reference drawing:	J3883-TVS-D-01839		

Electrical Test - Continuity Test

A.Test instruments

Type	Model	Serial No. of Instrument	Calibration Certificated No.	Date of Calibration
Multimeter	KEW6010B	E0233986	CSC248859	15/11/2024

B. Commissioning Tests

APS Plenum 1 ESP Sub-assembly: 2

Item	Test Conductor	P1 (IONIZER) (ohm)	P2 (IONIZER) (ohm)	P3 (IONIZER) (ohm)
1	P4 (IONIZER)	0.45	N.A.	N.A.
2	P5 (IONIZER)	N.A.	0.86	N.A.
3	P6 (IONIZER)	N.A.	N.A.	0.54
4	P7 (IONIZER)	0.56	N.A.	N.A.
5	P8 (IONIZER)	N.A.	0.61	N.A.
6	P9 (IONIZER)	N.A.	N.A.	0.54
7	P10 (IONIZER)	0.52	N.A.	N.A.
8	P11 (IONIZER)	N.A.	0.68	N.A.
9	P12 (IONIZER)	N.A.	N.A.	0.52
10	P13 (IONIZER)	0.68	N.A.	N.A.
11	P14 (IONIZER)	N.A.	0.55	N.A.
12	P15 (IONIZER)	N.A.	N.A.	0.66
13	P16 (IONIZER)	0.62	N.A.	N.A.
14	P17 (IONIZER)	N.A.	0.63	N.A.
15	P18 (IONIZER)	N.A.	N.A.	0.52

According to the manufacture`s QC report, the resistance of each ESP cell collector or ionizer (from collector/ionizer plate to busbar terminal) should be less than 0.5 ohm, and the APS ESP busbar resistance should be less than or equal to 0.1 ohm. The total passing resistance for ionizer / collector would be the sum of the resistance of two cells (2 cell * 0.5 ohm) and the resistance of the busbar (0.1 ohm).
Therefore, the passing criteria of ionizer /collector continuity test is under 1.1 ohm.
The passing criteria between frame plate /collector earth plate and earth is under 0.6 ohm.

C. Comment

Tested / Checked by: (Name of CTA Representative)	Name: HO TUNG	Signature: Ho Tung	Date: 15/07/2025
Witnessed by: (Name of JEC Representative)	Name: John Chan	Signature:	Date: 15/07/2025
Witnessed by: (Name of GCL	Name: Boris Yan	Signature: Yan	Date: 15/07/2025
Witnessed by: (Name of AMAJV	Name: Andy Tang	Signature: Andy Tang	Date: 15/07/2025

Gammon

CTA INTERNATIONAL AS CLEAN TUNNEL AIR

AIR PURIFICATION SYSTEM (APS) **T&C for ESP Filter**

ESP FILTER ELECTRICAL TEST INSPECTION CHECK FORM

Project:	Contract No. HY/2019/13 Central Kowloon Route - Buildings, Electrical and Mechanical Works	RISC NO.:	35146A
		Date:	15/7/2025
APS Sub-System :	ESP Filter System *	Room Name :	Plenum 1
Sub-assembly :	ESP Filter		
Location:	YVB / HVB / KVB *		
T&C Plan Ref. No.:	J3883-TVS-S-06866		
Reference drawing:	J3883-TVS-D-01839		

Electrical Test - Continuity Test

A.Test instruments

Type	Model	Serial No. of Instrument	Calibration Certificated No.	Date of Calibration
Multimeter	KEW6010B	E0233986	CSC248859	15/11/2024

B. Commissioning Tests

APS Plenum 1 ESP Sub-assembly: 3

Item	Test Conductor	P1 (IONIZER) (ohm)	P2 (IONIZER) (ohm)	P3 (IONIZER) (ohm)
1	P4 (IONIZER)	0.54	N.A.	N.A.
2	P5 (IONIZER)	N.A.	0.78	N.A.
3	P6 (IONIZER)	N.A.	N.A.	0.67
4	P7 (IONIZER)	0.66	N.A.	N.A.
5	P8 (IONIZER)	N.A.	0.65	N.A.
6	P9 (IONIZER)	N.A.	N.A.	0.63
7	P10 (IONIZER)	53.00	N.A.	N.A.
8	P11 (IONIZER)	N.A.	0.68	N.A.
9	P12 (IONIZER)	N.A.	N.A.	0.55
10	P13 (IONIZER)	0.53	N.A.	N.A.
11	P14 (IONIZER)	N.A.	0.55	N.A.
12	P15 (IONIZER)	N.A.	N.A.	0.59
13	P16 (IONIZER)	0.58	N.A.	N.A.
14	P17 (IONIZER)	N.A.	0.62	N.A.
15	P18 (IONIZER)	N.A.	N.A.	0.64

According to the manufacture`s QC report, the resistance of each ESP cell collector or ionizer (from collector/ionizer plate to busbar terminal) should be less than 0.5 ohm, and the APS ESP busbar resistance should be less than or equal to 0.1 ohm. The total passing resistance for ionizer / collector would be the sum of the resistance of two cells (2 cell * 0.5 ohm) and the resistance of the busbar (0.1 ohm).
Therefore, the passing criteria of ionizer /collector continuity test is under 1.1 ohm.
The passing criteria between frame plate /collector earth plate and earth is under 0.6 ohm.

C. Comment

Tested / Checked by: (Name of CTA Representative)	Name: HO TUNG	Signature: Ho Tung	Date: 15/07/2025
Witnessed by: (Name of JEC Representative)	Name: John Chan	Signature:	Date: 15/07/2025
Witnessed by: (Name of GCL	Name: Boris Yan	Signature:	Date: 15/07/2025
Witnessed by: (Name of AMMJV	Name: Andy Tang	Signature: Andy Tang	Date: 15/07/2025

Gammon

CTA INTERNATIONAL AS CLEAN TUNNEL AIR

AIR PURIFICATION SYSTEM (APS)

T&C for ESP Filter

ESP FILTER ELECTRICAL TEST INSPECTION CHECK FORM

Project:	Contract No. HY/2019/13 Central Kowloon Route - Buildings, Electrical and Mechanical Works	RISC NO.:	35146A
		Date:	15/7/2025
APS Sub-System :	ESP Filter System *	Room Name :	Plenum 1
Sub-assembly :	ESP Filter		
Location:	YVB / HVB / KVB *		
T&C Plan Ref. No.:	J3883-TVS-S-06866		
Reference drawing:	J3883-TVS-D-01839		

Electrical Test - Continuity Test

A.Test instruments

Type	Model	Serial No. of Instrument	Calibration Certificated No.	Date of Calibration
Multimeter	KEW6010B	E0233986	CSC248859	15/11/2024

B. Commissioning Tests

APS Plenum 1 ESP Sub-assembly: 4

Item	Test Conductor	P1 (IONIZER) (ohm)	P2 (IONIZER) (ohm)	P3 (IONIZER) (ohm)
1	P4 (IONIZER)	0.58	N.A.	N.A.
2	P5 (IONIZER)	N.A.	0.57	N.A.
3	P6 (IONIZER)	N.A.	N.A.	0.51
4	P7 (IONIZER)	0.52	N.A.	N.A.
5	P8 (IONIZER)	N.A.	0.60	N.A.
6	P9 (IONIZER)	N.A.	N.A.	0.54
7	P10 (IONIZER)	0.55	N.A.	N.A.
8	P11 (IONIZER)	N.A.	0.58	N.A.
9	P12 (IONIZER)	N.A.	N.A.	0.48
10	P13 (IONIZER)	0.58	N.A.	N.A.
11	P14 (IONIZER)	N.A.	0.68	N.A.
12	P15 (IONIZER)	N.A.	N.A.	0.51
13	P16 (IONIZER)	0.55	N.A.	N.A.
14	P17 (IONIZER)	N.A.	0.53	N.A.
15	P18 (IONIZER)	N.A.	N.A.	0.44

According to the manufacture`s QC report, the resistance of each ESP cell collector or ionizer (from collector/ionizer plate to busbar terminal) should be less than 0.5 ohm, and the APS ESP busbar resistance should be less than or equal to 0.1 ohm. The total passing resistance for ionizer / collector would be the sum of the resistance of two cells (2 cell * 0.5 ohm) and the resistance of the busbar (0.1 ohm).
Therefore, the passing criteria of ionizer /collector continuity test is under 1.1 ohm.
The passing criteria between frame plate /collector earth plate and earth is under 0.6 ohm.

C. Comment

Tested / Checked by: (Name of CTA Representative)	Name: HO TUNG	Signature:	Date: 15/07/2025
Witnessed by: (Name of JEC Representative)	Name: John Chan	Signature:	Date: 15/07/2025
Witnessed by: (Name of GCL	Name: Boris Yan	Signature:	Date: 15/07/2025
Witnessed by: (Name of AMCTV	Name: Andy Tang	Signature:	Date: 15/07/2025

Gammon

CTA INTERNATIONAL AS CLEAN TUNNEL AIR

AIR PURIFICATION SYSTEM (APS) **T&C for ESP Filter**

ESP FILTER ELECTRICAL TEST INSPECTION CHECK FORM

Project:	Contract No. HY/2019/13 Central Kowloon Route - Buildings, Electrical and Mechanical Works	RISC NO.:	35146A
		Date:	15/7/2025
APS Sub-System :	ESP Filter System *	Room Name :	Plenum 1
Sub-assembly :	ESP Filter		
Location:	YVB / HVB / KVB *		
T&C Plan Ref. No.:	J3883-TVS-S-06866		
Reference drawing:	J3883-TVS-D-01839		

Electrical Test - Continuity Test

A.Test instruments

Type	Model	Serial No. of Instrument	Calibration Certificated No.	Date of Calibration
Multimeter	KEW6010B	E0233986	CSC248859	15/11/2024

B. Commissioning Tests

APS Plenum 1 ESP Sub-assembly: 5

Item	Test Conductor	P1 (IONIZER) (ohm)	P2 (IONIZER) (ohm)	P3 (IONIZER) (ohm)
1	P4 (IONIZER)	0.58	N.A.	N.A.
2	P5 (IONIZER)	N.A.	0.57	N.A.
3	P6 (IONIZER)	N.A.	N.A.	0.68
4	P7 (IONIZER)	0.57	N.A.	N.A.
5	P8 (IONIZER)	N.A.	0.60	N.A.
6	P9 (IONIZER)	N.A.	N.A.	0.54
7	P10 (IONIZER)	0.52	N.A.	N.A.
8	P11 (IONIZER)	N.A.	0.55	N.A.
9	P12 (IONIZER)	N.A.	N.A.	0.69
10	P13 (IONIZER)	0.58	N.A.	N.A.
11	P14 (IONIZER)	N.A.	0.48	N.A.
12	P15 (IONIZER)	N.A.	N.A.	0.51
13	P16 (IONIZER)	0.76	N.A.	N.A.
14	P17 (IONIZER)	N.A.	0.53	N.A.
15	P18 (IONIZER)	N.A.	N.A.	0.49

According to the manufacture`s QC report, the resistance of each ESP cell collector or ionizer (from collector/ionizer plate to busbar terminal) should be less than 0.5 ohm, and the APS ESP busbar resistance should be less than or equal to 0.1 ohm. The total passing resistance for ionizer / collector would be the sum of the resistance of two cells (2 cell * 0.5 ohm) and the resistance of the busbar (0.1 ohm).
Therefore, the passing criteria of ionizer /collector continuity test is under 1.1 ohm.
The passing criteria between frame plate /collector earth plate and earth is under 0.6 ohm.

C. Comment

Tested / Checked by: (Name of CTA Representative)	Name: HO TUNG	Signature: Ho Tung	Date: 15/07/2025
Witnessed by: (Name of JEC Representative)	Name: John Chan	Signature:	Date: 15/07/2025
Witnessed by: (Name of GCL	Name: Boris Yan	Signature:	Date: 15/07/2025
Witnessed by: (Name of AMMJV	Name: Andy Tang	Signature: Andy Tang	Date: 15/07/2025

Gammon

CTA INTERNATIONAL AS CLEAN TUNNEL A/S

AIR PURIFICATION SYSTEM (APS)

T&C for ESP Filter

ESP FILTER ELECTRICAL TEST INSPECTION CHECK FORM

Project:	Contract No. HY/2019/13 Central Kowloon Route - Buildings, Electrical and Mechanical Works	RISC NO.:	35146A
		Date:	15/7/2025
APS Sub-System :	ESP Filter System *	Room Name :	Plenum 1
Location:	YVB /(HVB) KVB *		
T&C Plan Ref. No.:	J3883-TVS-S-06866		
Reference drawing:	J3883-TVS-D-01839		

Electrical Test - Continuity Test

A.Test instruments

Type	Model	Serial No. of Instrument	Calibration Certificated No.	Date of Calibration
Multimeter	KEW6010B	E0233986	CSC248859	15/11/2024

B. Commissioning Tests APS Plenum 1 ESP Sub-assembly: 1

Test Conductor	P19 (COLLECTOR) (ohm)
P20 (COLLECTOR)	0.17
P21 (COLLECTOR)	0.29
P22 (COLLECTOR)	0.33
P23 (COLLECTOR)	0.33
P24 (COLLECTOR)	0.30
P25 (COLLECTOR)	0.26
P26 (COLLECTOR)	0.27
P27 (COLLECTOR)	0.33
P28 (COLLECTOR)	0.22
P29 (COLLECTOR)	0.24
P30 (COLLECTOR)	0.35
P31 (COLLECTOR)	0.36
P32 (COLLECTOR)	0.12
P33 (COLLECTOR)	0.18
P34 (COLLECTOR)	0.11
P35 (COLLECTOR)	0.13
P36 (COLLECTOR)	0.35

Test Conductor	P37 (COLLECTOR EARTH) (ohm)
P38 (COLLECTOR	0.31
P39 (COLLECTOR	0.20
P40 (COLLECTOR	0.12
P41 (COLLECTOR	0.37
P42 (COLLECTOR	0.34
P43 (COLLECTOR	0.24
P44 (COLLECTOR	0.24
P45 (COLLECTOR	0.32
P46 (COLLECTOR	0.17
P47 (COLLECTOR	0.14
P48 (COLLECTOR	0.33
P49 (COLLECTOR	0.37
P50 (COLLECTOR	0.21
P51 (COLLECTOR	0.30
P52 (COLLECTOR	0.37
P53 (COLLECTOR	0.18
P54 (COLLECTOR	0.28
P55 (FRAME)	0.10
EARTH	0.32

According to the manufacture`s QC report, the resistance of each ESP cell collector or ionizer (from collector/ionizer plate to busbar terminal) should be less than 0.5 ohm, and the APS ESP busbar resistance should be less than or equal to 0.1 ohm. The total passing resistance for ionizer / collector would be the sum of the resistance of two cells (2 cell * 0.5 ohm) and the resistance of the busbar (0.1 ohm).

Therefore, the passing criteria of ionizer /collector continuity test is under 1.1 ohm.

The passing criteria between frame plate /collector earth plate and earth is under 0.6 ohm.

C. Comment

Tested / Checked by: (Name of CTA Representative)	Name: HO TUNG	Signature: Ho Tung	Date: 15/07/2025
Witnessed by: (Name of JEC Representative)	Name: John Chan	Signature:	Date: 15/07/2025
Witnessed by: (Name of GCL)	Name: Boris Yan	Signature:	Date: 15/07/2025
Witnessed by: (Name of AMMJV)	Name: Andy Tang	Signature:	Date: 15/07/2025
Witnessed by: (Name of)	Name:	Signature:	Date:
Witnessed by: (Name of)	Name:	Signature:	Date:

Gammon

CTA INTERNATIONAL AS CLEAN TUNNEL AIR

AIR PURIFICATION SYSTEM (APS)

T&C for ESP Filter

ESP FILTER ELECTRICAL TEST INSPECTION CHECK FORM

Project:	Contract No. HY/2019/13 Central Kowloon Route	RISC NO.:	35146/8
	- Buildings, Electrical and Mechanical Works	Date:	15/7/2025
APS Sub-System :	ESP Filter System *	Room Name :	Plenum 1
Location:	YVB / HVB / KVB *		
T&C Plan Ref. No.:	J3883-TVS-S-06866		
Reference drawing:	J3883-TVS-D-01839		

Electrical Test - Continuity Test

A.Test instruments

Type	Model	Serial No. of Instrument	Calibration Certificated No.	Date of Calibration
Multimeter	KEW6010B	E0233986	CSC248859	15/11/2024

B. Commissioning Tests APS Plenum 1 ESP Sub-assembly: 2

Test Conductor	P19 (COLLECTOR) (ohm)
P20 (COLLECTOR)	0.15
P21 (COLLECTOR)	0.35
P22 (COLLECTOR)	0.31
P23 (COLLECTOR)	0.30
P24 (COLLECTOR)	0.13
P25 (COLLECTOR)	0.27
P26 (COLLECTOR)	0.26
P27 (COLLECTOR)	0.13
P28 (COLLECTOR)	0.19
P29 (COLLECTOR)	0.28
P30 (COLLECTOR)	0.35
P31 (COLLECTOR)	0.29
P32 (COLLECTOR)	0.27
P33 (COLLECTOR)	0.35
P34 (COLLECTOR)	0.14
P35 (COLLECTOR)	0.35
P36 (COLLECTOR)	0.34

Test Conductor	P37 (COLLECTOR EARTH) (ohm)
P38 (COLLECTOR	0.17
P39 (COLLECTOR	0.21
P40 (COLLECTOR	0.31
P41 (COLLECTOR	0.31
P42 (COLLECTOR	0.13
P43 (COLLECTOR	0.24
P44 (COLLECTOR	0.24
P45 (COLLECTOR	0.25
P46 (COLLECTOR	0.21
P47 (COLLECTOR	0.21
P48 (COLLECTOR	0.33
P49 (COLLECTOR	0.27
P50 (COLLECTOR	0.24
P51 (COLLECTOR	0.30
P52 (COLLECTOR	0.31
P53 (COLLECTOR	0.25
P54 (COLLECTOR	0.22
P55 (FRAME)	0.21
EARTH	0.12

According to the manufacture`s QC report, the resistance of each ESP cell collector or ionizer (from collector/ionizer plate to busbar terminal) should be less than 0.5 ohm, and the APS ESP busbar resistance should be less than or equal to 0.1 ohm. The total passing resistance for ionizer / collector would be the sum of the resistance of two cells (2 cell * 0.5 ohm) and the resistance of the busbar (0.1 ohm).

Therefore, the passing criteria of ionizer /collector continuity test is under 1.1 ohm.

The passing criteria between frame plate /collector earth plate and earth is under 0.6 ohm.

C. Comment

Tested / Checked by: (Name of CTA Representative)	Name: HO TUNG	Signature: Ho Tung	Date: 15/07/2025
Witnessed by: (Name of JEC Representative)	Name: John Chan	Signature:	Date: 15/07/2025
Witnessed by: (Name of GCL)	Name: Boris Yan	Signature:	Date: 15/07/2025
Witnessed by: (Name of AMMJV)	Name: Andy Tang	Signature:	Date: 15/07/2025
Witnessed by: (Name of)	Name:	Signature:	Date:
Witnessed by: (Name of)	Name:	Signature:	Date:

Gammon

CTA INTERNATIONAL AS

AIR PURIFICATION SYSTEM (APS)

T&C for ESP Filter

ESP FILTER ELECTRICAL TEST INSPECTION CHECK FORM

Project:	Contract No. HY/2019/13 Central Kowloon Route - Buildings, Electrical and Mechanical Works	RISC NO.:	35146A
		Date:	15/7/2025
APS Sub-System :	ESP Filter System *	Room Name :	Plenum 1
Location:	YVB / (HVB) KVB *		
T&C Plan Ref. No.:	J3883-TVS-S-06866		
Reference drawing:	J3883-TVS-D-01839		

Electrical Test - Continuity Test

A.Test instruments

Type	Model	Serial No. of Instrument	Calibration Certificated No.	Date of Calibration
Multimeter	KEW6010B	E0233986	CSC248859	15/11/2024

B. Commissioning Tests APS Plenum 1 ESP Sub-assembly: 3

Test Conductor	P19 (COLLECTOR) (ohm)(Ω)
P20 (COLLECTOR)	0.26
P21 (COLLECTOR)	0.20
P22 (COLLECTOR)	0.20
P23 (COLLECTOR)	0.32
P24 (COLLECTOR)	0.29
P25 (COLLECTOR)	0.16
P26 (COLLECTOR)	0.22
P27 (COLLECTOR)	0.34
P28 (COLLECTOR)	0.11
P29 (COLLECTOR)	0.12
P30 (COLLECTOR)	0.14
P31 (COLLECTOR)	0.26
P32 (COLLECTOR)	0.28
P33 (COLLECTOR)	0.27
P34 (COLLECTOR)	0.12
P35 (COLLECTOR)	0.21
P36 (COLLECTOR)	0.18

Test Conductor	P37 (COLLECTOR EARTH) (ohm)(Ω)
P38 (COLLECTOR	0.34
P39 (COLLECTOR	0.35
P40 (COLLECTOR	0.16
P41 (COLLECTOR	0.32
P42 (COLLECTOR	0.12
P43 (COLLECTOR	0.21
P44 (COLLECTOR	0.19
P45 (COLLECTOR	0.11
P46 (COLLECTOR	0.29
P47 (COLLECTOR	0.24
P48 (COLLECTOR	0.35
P49 (COLLECTOR	0.31
P50 (COLLECTOR	0.32
P51 (COLLECTOR	0.37
P52 (COLLECTOR	0.25
P53 (COLLECTOR	0.19
P54 (COLLECTOR	0.26
P55 (FRAME)	0.19
EARTH	0.17

According to the manufacture`s QC report, the resistance of each ESP cell collector or ionizer (from collector/ionizer plate to busbar terminal) should be less than 0.5 ohm, and the APS ESP busbar resistance should be less than or equal to 0.1 ohm. The total passing resistance for ionizer / collector would be the sum of the resistance of two cells (2 cell * 0.5 ohm) and the resistance of the busbar (0.1 ohm).

Therefore, the passing criteria of ionizer /collector continuity test is under 1.1 ohm.

The passing criteria between frame plate /collector earth plate and earth is under 0.6 ohm.

C. Comment

Tested / Checked by: (Name of CTA Representative)	Name: HO TUNG	Signature: Ho Tung	Date: 15/07/2025
Witnessed by: (Name of JEC Representative)	Name: John Chan	Signature:	Date: 15/07/2025
Witnessed by: (Name of GCL)	Name: Boris Yan	Signature:	Date: 15/07/2025
Witnessed by: (Name of AMNOV)	Name: Andy Tang	Signature:	Date: 15/07/2025
Witnessed by: (Name of)	Name:	Signature:	Date:
Witnessed by: (Name of)	Name:	Signature:	Date:

Gammon

CTA INTERNATIONAL AS CLEAN TUNNEL AIR

AIR PURIFICATION SYSTEM (APS)
ESP FILTER ELECTRICAL TEST INSPECTION CHECK FORM

T&C for ESP Filter

Project:	Contract No. HY/2019/13 Central Kowloon Route - Buildings, Electrical and Mechanical Works	RISC NO.:	35146A
		Date:	15/7/2025
APS Sub-System :	ESP Filter System *	Room Name :	Plenum 1
Location:	YVB / (HVB) KVB *		
T&C Plan Ref. No.:	J3883-TVS-S-06866		
Reference drawing:	J3883-TVS-D-01839		

Electrical Test - Continuity Test

A.Test instruments

Type	Model	Serial No. of Instrument	Calibration Certificated No.	Date of Calibration
Multimeter	KEW6010B	E0233986	CSC248859	15/11/2024

B. Commissioning Tests APS Plenum 1 ESP Sub-assembly: 4

Test Conductor	P19 (COLLECTOR) (ohm) (Ω)
P20 (COLLECTOR)	0.11
P21 (COLLECTOR)	0.26
P22 (COLLECTOR)	0.29
P23 (COLLECTOR)	0.36
P24 (COLLECTOR)	0.11
P25 (COLLECTOR)	0.36
P26 (COLLECTOR)	0.22
P27 (COLLECTOR)	0.11
P28 (COLLECTOR)	0.27
P29 (COLLECTOR)	0.35
P30 (COLLECTOR)	0.28
P31 (COLLECTOR)	0.17
P32 (COLLECTOR)	0.32
P33 (COLLECTOR)	0.13
P34 (COLLECTOR)	0.30
P35 (COLLECTOR)	0.11
P36 (COLLECTOR)	0.33

Test Conductor	P37 (COLLECTOR EARTH) (ohm) (Ω)
P38 (COLLECTOR)	0.23
P39 (COLLECTOR)	0.28
P40 (COLLECTOR)	0.29
P41 (COLLECTOR)	0.34
P42 (COLLECTOR)	0.36
P43 (COLLECTOR)	0.24
P44 (COLLECTOR)	0.25
P45 (COLLECTOR)	0.15
P46 (COLLECTOR)	0.28
P47 (COLLECTOR)	0.23
P48 (COLLECTOR)	0.18
P49 (COLLECTOR)	0.37
P50 (COLLECTOR)	0.23
P51 (COLLECTOR)	0.16
P52 (COLLECTOR)	0.20
P53 (COLLECTOR)	0.18
P54 (COLLECTOR)	0.35
P55 (FRAME)	0.24
EARTH	0.30

According to the manufacture`s QC report, the resistance of each ESP cell collector or ionizer (from collector/ionizer plate to busbar terminal) should be less than 0.5 ohm, and the APS ESP busbar resistance should be less than or equal to 0.1 ohm. The total passing resistance for ionizer / collector would be the sum of the resistance of two cells (2 cell * 0.5 ohm) and the resistance of the busbar (0.1 ohm).
Therefore, the passing criteria of ionizer /collector continuity test is under 1.1 ohm.
The passing criteria between frame plate /collector earth plate and earth is under 0.6 ohm.

C. Comment

Tested / Checked by: (Name of CTA Representative)	Name: HO TUNG	Signature: Ho Tung	Date: 15/07/2025
Witnessed by: (Name of JEC Representative)	Name: John Chan	Signature:	Date: 15/07/2025
Witnessed by: (Name of GCL)	Name: Boris Yan	Signature:	Date: 15/07/2025
Witnessed by: (Name of AMNTV)	Name: Andy Tang	Signature: Andy Tang	Date: 15/07/2025
Witnessed by: (Name of)	Name:	Signature:	Date:
Witnessed by: (Name of)	Name:	Signature:	Date:

Gammon

CTA INTERNATIONAL AS CLEAN TUNNEL AIR

AIR PURIFICATION SYSTEM (APS)

T&C for ESP Filter

ESP FILTER ELECTRICAL TEST INSPECTION CHECK FORM

Project: Contract No. HY/2019/13 Central Kowloon Route - Buildings, Electrical and Mechanical Works

RISC NO.: 35146A

Date: 15/7/2025

APS Sub-System : ESP Filter System *

Room Name : Plenum 1

Location: YVB / (HVB) KVB *

T&C Plan Ref. No.: J3883-TVS-S-06866

Reference drawing: J3883-TVS-D-01839

Electrical Test - Continuity Test

A.Test instruments

Type	Model	Serial No. of Instrument	Calibration Certificated No.	Date of Calibration
Multimeter	KEW6010B	E0233986	CSC248859	15/11/2024

B. Commissioning Tests APS Plenum 1 ESP Sub-assembly: 5

Test Conductor	P19 (COLLECTOR)
P20 (COLLECTOR)	0.11
P21 (COLLECTOR)	0.18
P22 (COLLECTOR)	0.20
P23 (COLLECTOR)	0.26
P24 (COLLECTOR)	0.32
P25 (COLLECTOR)	0.35
P26 (COLLECTOR)	0.13
P27 (COLLECTOR)	0.17
P28 (COLLECTOR)	0.27
P29 (COLLECTOR)	0.24
P30 (COLLECTOR)	0.24
P31 (COLLECTOR)	0.14
P32 (COLLECTOR)	0.31
P33 (COLLECTOR)	0.31
P34 (COLLECTOR)	0.11
P35 (COLLECTOR)	0.31
P36 (COLLECTOR)	0.12

Test Conductor	P37 (COLLECTOR EARTH)
P38 (COLLECTOR	0.15
P39 (COLLECTOR	0.15
P40 (COLLECTOR	0.10
P41 (COLLECTOR	0.34
P42 (COLLECTOR	0.23
P43 (COLLECTOR	0.17
P44 (COLLECTOR	0.28
P45 (COLLECTOR	0.18
P46 (COLLECTOR	0.29
P47 (COLLECTOR	0.27
P48 (COLLECTOR	0.21
P49 (COLLECTOR	0.22
P50 (COLLECTOR	0.32
P51 (COLLECTOR	0.10
P52 (COLLECTOR	0.29
P53 (COLLECTOR	0.30
P54 (COLLECTOR	0.27
P55 (FRAME)	0.25
EARTH	0.35

According to the manufacture`s QC report, the resistance of each ESP cell collector or ionizer (from collector/ionizer plate to busbar terminal) should be less than 0.5 ohm, and the APS ESP busbar resistance should be less than or equal to 0.1 ohm. The total passing resistance for ionizer / collector would be the sum of the resistance of two cells (2 cell * 0.5 ohm) and the resistance of the busbar (0.1 ohm).

Therefore, the passing criteria of ionizer /collector continuity test is under 1.1 ohm.

The passing criteria between frame plate /collector earth plate and earth is under 0.6 ohm.

C. Comment

Tested / Checked by: (Name of CTA Representative)	Name: HO TUNG	Signature: Ho Tung	Date: 15/07/2025
Witnessed by: (Name of JEC Representative)	Name: John Chan	Signature:	Date: 15/07/2025
Witnessed by: (Name of GCL)	Name: Boris Yan	Signature:	Date: 15/07/2025
Witnessed by: (Name of AMMJV)	Name: Andy Tang	Signature:	Date: 15/07/2025
Witnessed by: (Name of)	Name:	Signature:	Date:
Witnessed by: (Name of)	Name:	Signature:	Date:

Gammon

CTA INTERNATIONAL AS CLEAN TUNNEL AIR

AIR PURIFICATION SYSTEM (APS)
ESP FILTER 1ST FIXING INSPECTION CHECK FORM

T&C for ESP Filter

Project:	Contract No. HY/2019/13 Central Kowloon Route - Buildings, Electrical and Mechanical Works	RISC NO.:	033289A
		Date:	28 Oct 2025
APS Sub-System :	ESP Filter System *	Room Name :	Plenum 2
Location:	~~YVB~~ / HVB/ ~~KVB~~ *		
T&C Plan Ref. No.:	J3883-TVS-S-02893		
Reference drawing:	J3883-TVS-D-01839		

A. ESP Cells Serial No. test form

Sub-assembly : A

Brand Name : CTA

Model No.: CTA ESP

Items	Location		ESP Cell Serial no.
	Column	Row	
1)	1	1	0388002324 080834
2)	1	2	0388002324 080829
3)	1	3	0388002324 080824
4)	1	4	0388002324 090951
5)	1	5	0388002324 090922
6)	1	6	0388002324 101012
7)	2	1	0388002324 080783
8)	2	2	0388002324 080785
9)	2	3	0388002324 090884
10)	2	4	0388002324 090952
11)	2	5	0388002324 090999
12)	2	6	0388002324 090960
13)	3	1	0388002324 080838
14)	3	2	0388002324 080813
15)	3	3	0388002324 080781
16)	3	4	0388002324 090939
17)	3	5	0388002324 090959
18)	3	6	0388002324 091006

B. Comment

Tested / Checked by: (Name of CTA Representative)	Name: Johnny Kwang	Signature:	Date: 28/10/25
Witnessed by: (Name of JEC Representative)	Name: John Chan	Signature:	Date: 28/10/25
Witnessed by: (Name of GCL)	Name: Crystal Cheung	Signature: Lok	Date: 28/10/25
Witnessed by: (Name of BMJV)	Name: Anthony LAM	Signature:	Date: 28/10/25
Witnessed by: (Name of)	Name:	Signature:	Date:
Witnessed by: (Name of)	Name:	Signature:	Date:

Gammon

CTA INTERNATIONAL AS CLEAN TUNNEL AIR

AIR PURIFICATION SYSTEM (APS)
ESP FILTER 1ST FIXING INSPECTION CHECK FORM

T&C for ESP Filter

Project:	Contract No. HY/2019/13 Central Kowloon Route - Buildings, Electrical and Mechanical Works	RISC NO.:	033289A
		Date:	28 Oct 2025
APS Sub-System :	ESP Filter System *	Room Name :	Plenum 2
Location:	~~YVB~~ / HVB/ ~~KVB~~ *		
T&C Plan Ref. No.:	J3883-TVS-S-02893		
Reference drawing:	J3883-TVS-D-01839		

A. ESP Cells Serial No. test form

Sub-assembly : B

Brand Name : CTA

Model No.: CTA ESP

Items	Location		ESP Cell Serial no.
	Column	Row	
1)	1	1	0388002324 080809
2)	1	2	0388002324 080799
3)	1	3	0388002324 080822
4)	1	4	0388002324 091005
5)	1	5	0388002324 090914
6)	1	6	0388002324 090923
7)	2	1	0388002324 080776
8)	2	2	0388002324 090876
9)	2	3	0388002324 090885
10)	2	4	0388002324 090935
11)	2	5	0388002324 090979
12)	2	6	0388002324 090908
13)	3	1	0388002324 080770
14)	3	2	0388002324 080820
15)	3	3	0388002324 080810
16)	3	4	0388002324 090912
17)	3	5	0388002324 101022
18)	3	6	0388002324 090977

B. Comment

Tested / Checked by: (Name of CTA Representative)	Name: Johnny Kwang	Signature:	Date: 28/10/25
Witnessed by: (Name of JEC Representative)	Name: John Chan	Signature:	Date: 28/10/25
Witnessed by: (Name of GCL)	Name: Crystal Cheung	Signature: Lok	Date: 28/10/25
Witnessed by: (Name of AMMJV)	Name: Arthur LAM	Signature: Arthur	Date: 28/10/25
Witnessed by: (Name of)	Name:	Signature:	Date:
Witnessed by: (Name of)	Name:	Signature:	Date:

Gammon

CTA INTERNATIONAL AS CLEAN TUNNEL AIR

AIR PURIFICATION SYSTEM (APS)
ESP FILTER 1ST FIXING INSPECTION CHECK FORM

T&C for ESP Filter

Project:	Contract No. HY/2019/13 Central Kowloon Route - Buildings, Electrical and Mechanical Works	RISC NO.:	033289A
		Date:	28 Oct 2025
APS Sub-System :	ESP Filter System *	Room Name :	Plenum 2
Location:	~~YVB~~ / HVB/ ~~KVB~~ *		
T&C Plan Ref. No.:	J3883-TVS-S-02893		
Reference drawing:	J3883-TVS-D-01839		

A. ESP Cells Serial No. test form

Sub-assembly : C

Brand Name : CTA

Model No.: CTA ESP

Items	Location		ESP Cell Serial no.
	Column	Row	
1)	1	1	0388002324 090953
2)	1	2	0388002324 090996
3)	1	3	0388002324 090904
4)	1	4	0388002324 080778
5)	1	5	0388002324 101011
6)	1	6	0388002324 090897
7)	2	1	0388002324 090907
8)	2	2	0388002324 090892
9)	2	3	0388002324 101014
10)	2	4	0388002324 090966
11)	2	5	0388002324 090990
12)	2	6	0388002324 080807
13)	3	1	0388002324 090933
14)	3	2	0388002324 090943
15)	3	3	0388002324 090983
16)	3	4	0388002324 090936
17)	3	5	0388002324 090980
18)	3	6	0388002324 080784

B. Comment

Tested / Checked by: (Name of CTA Representative)	Name: Johnny Kwong	Signature:	Date: 28/10/25
Witnessed by: (Name of JEC Representative)	Name: John Chu	Signature:	Date: 28/10/25
Witnessed by: (Name of GCL)	Name: Crystal Cheung	Signature: Lok	Date: 28/10/25
Witnessed by: (Name of AMHSV)	Name: Arthur CAM	Signature: Arthur	Date: 28/10/25
Witnessed by: (Name of)	Name:	Signature:	Date:
Witnessed by: (Name of)	Name:	Signature:	Date:

Gammon

CTA INTERNATIONAL AS CLEAN TUNNEL AIR

AIR PURIFICATION SYSTEM (APS)
ESP FILTER 1ST FIXING INSPECTION CHECK FORM

T&C for ESP Filter

Project:	Contract No. HY/2019/13 Central Kowloon Route - Buildings, Electrical and Mechanical Works	RISC NO.:	033289A
		Date:	28 Oct 2025
APS Sub-System :	ESP Filter System *	Room Name :	Plenum 2
Location:	~~YVB~~ / HVB/ ~~KVB~~ *		
T&C Plan Ref. No.:	J3883-TVS-S-02893		
Reference drawing:	J3883-TVS-D-01839		

A. ESP Cells Serial No. test form

Sub-assembly : D

Brand Name : CTA

Model No.: CTA ESP

Items	Location		ESP Cell Serial no.
	Column	Row	
1)	1	1	0388002324 080827
2)	1	2	0388002324 080846
3)	1	3	0388002324 080837
4)	1	4	0388002324 090940
5)	1	5	0388002324 090947
6)	1	6	0388002324 101020
7)	2	1	0388002324 080766
8)	2	2	0388002324 080845
9)	2	3	0388002324 080791
10)	2	4	0388002324 090971
11)	2	5	0388002324 090915
12)	2	6	0388002324 090924
13)	3	1	0388002324 080761
14)	3	2	0388002324 080863
15)	3	3	0388002324 080862
16)	3	4	0388002324 090941
17)	3	5	0388002324 090970
18)	3	6	0388002324 090913

B. Comment

Tested / Checked by: (Name of CTA Representative)	Name: Johnny Kwong	Signature:	Date: 28/10/25
Witnessed by: (Name of JEC Representative)	Name: John Chan	Signature:	Date: 28/10/25
Witnessed by: (Name of GCL)	Name: Crystal Cheung	Signature:	Date: 28/10/25
Witnessed by: (Name of AMHJV)	Name: Arthur LAM	Signature:	Date: 28/10/25
Witnessed by: (Name of)	Name:	Signature:	Date:
Witnessed by: (Name of)	Name:	Signature:	Date:

Gammon

CTA INTERNATIONAL AS CLEAN TUNNEL AIR

AIR PURIFICATION SYSTEM (APS)
ESP FILTER 1ST FIXING INSPECTION CHECK FORM

T&C for ESP Filter

Project:	Contract No. HY/2019/13 Central Kowloon Route - Buildings, Electrical and Mechanical Works	RISC NO.:	033289A
		Date:	28 Oct 2025
APS Sub-System :	ESP Filter System *	Room Name :	Plenum 2
Location:	~~YVB~~ / HVB/ ~~KVB~~ *		
T&C Plan Ref. No.:	J3883-TVS-S-02893		
Reference drawing:	J3883-TVS-D-01839		

A. ESP Cells Serial No. test form

Sub-assembly : E

Brand Name : CTA

Model No.: CTA ESP

Items	Location		ESP Cell Serial no.
	Column	Row	
1)	1	1	0388002324 080836
2)	1	2	0388002324 090869
3)	1	3	0388002324 080771
4)	1	4	0388002324 080763
5)	1	5	0388002324 080806
6)	1	6	0388002324 080789
7)	2	1	0388002324 080858
8)	2	2	0388002324 080757
9)	2	3	0388002324 080841
10)	2	4	0388002324 080831
11)	2	5	0388002324 080788
12)	2	6	0388002324 080853
13)	3	1	0388002324 080857
14)	3	2	0388002324 080849
15)	3	3	0388002324 080825
16)	3	4	0388002324 080833
17)	3	5	0388002324 080850
18)	3	6	0388002324 080774

B. Comment

Tested / Checked by: (Name of CTA Representative)	Name: Johny Kuang	Signature:	Date: 28/10/25
Witnessed by: (Name of JEC Representative)	Name: John Chan	Signature:	Date: 28/10/25
Witnessed by: (Name of GCL)	Name: Crystal Cheung	Signature:	Date: 28/10/25
Witnessed by: (Name of AMMJV)	Name: Arthur	Signature: Arthur	Date: 28/10/25
Witnessed by: (Name of)	Name:	Signature:	Date:
Witnessed by: (Name of)	Name:	Signature:	Date:

Gammon

CTA INTERNATIONAL AS CLEAN TUNNEL AIR

AIR PURIFICATION SYSTEM (APS)
ESP FILTER ELECTRICAL TEST INSPECTION CHECK FORM

T&C for ESP Filter

Project: Contract No. HY/2019/13 Central Kowloon Route - Buildings, Electrical and Mechanical Works

RISC NO.: 35147A

Date: 15/07/2025

APS Sub-System : ESP Filter System *

Room Name : plenum 2

Sub-assembly : ESP filter

Location: ~~TVB~~ / HVB/ ~~KVB~~

T&C Plan Ref. No.: J3883-TVS-S-06866

Reference drawing: J3883-TVS-D-01839

Electrical Test - Continuity Test

A.Test instruments

Type	Model	Serial No. of Instrument	Calibration Certificated No.	Date of Calibration
Multimeter	KEW 6010B	E0233986	CSC248859	15/11/2024

B. Commissioning Tests

APS Plenum 2 ESP Sub-assembly: 1

Item	Test Conductor	P1 (IONIZER) ohm	P2 (IONIZER) ohm	P3 (IONIZER) ohm
1	P4 (IONIZER)	0.89	N.A.	N.A.
2	P5 (IONIZER)	N.A.	0.53	N.A.
3	P6 (IONIZER)	N.A.	N.A.	0.62
4	P7 (IONIZER)	1.19	N.A.	N.A.
5	P8 (IONIZER)	N.A.	0.47	N.A.
6	P9 (IONIZER)	N.A.	N.A.	0.37
7	P10 (IONIZER)	0.97	N.A.	N.A.
8	P11 (IONIZER)	N.A.	0.44	N.A.
9	P12 (IONIZER)	N.A.	N.A.	0.39
10	P13 (IONIZER)	1.07	N.A.	N.A.
11	P14 (IONIZER)	N.A.	0.48	N.A.
12	P15 (IONIZER)	N.A.	N.A.	0.39
13	P16 (IONIZER)	0.85	N.A.	N.A.
14	P17 (IONIZER)	N.A.	1.08	N.A.
15	P18 (IONIZER)	N.A.	N.A.	0.41

According to the manufacture's QC report, the resistance of each ESP cell collector or ionizer (from collector/ionizer plate to busbar terminal) should be less than 0.5 ohm, and the APS ESP busbar resistance should be less than or equal to 0.1 ohm. The total passing resistance for ionizer / collector would be the sum of the resistance of two cells (2 cell * 0.5 ohm) and the resistance of the busbar (0.1 ohm).
Therefore, the passing criteria of ionizer /collector continuity test is under 1.1 ohm.
The passing criteria between frame plate /collector earth plate and earth is under 0.6 ohm.

C. Comment

Tested / Checked by: (Name of CTA Representative)	Name: Ho Tung	Signature: Ho Tung	Date: 15/07/2025
Witnessed by: (Name of JEC Representative)	Name: John Chan	Signature:	Date: 15/07/2025
Witnessed by: (Name of GCL	Name: Raymond Lau	Signature:	Date: 15/07/2025
Witnessed by: (Name of AMMJV	Name: Tam Wing Kit	Signature:	Date: 15 JUL 2025
Witnessed by: (Name of	Name:	Signature:	Date:
Witnessed by: (Name of	Name:	Signature:	Date:

Gammon

CTA INTERNATIONAL AS CLEAN TUNNEL AIR

AIR PURIFICATION SYSTEM (APS)
ESP FILTER ELECTRICAL TEST INSPECTION CHECK FORM

T&C for ESP Filter

Project: Contract No. HY/2019/13 Central Kowloon Route - Buildings, Electrical and Mechanical Works

RISC NO.: 35147A

Date: 15/07/2025

APS Sub-System : ESP Filter System *

Room Name : plenum 2

Sub-assembly : ESP filter

Location: ~~YVB~~/ HVB/ ~~KVB~~

T&C Plan Ref. No.: J3883-TVS-S-06866

Reference drawing: J3883-TVS-D-01839

Electrical Test - Continuity Test

A. Test instruments

Type	Model	Serial No. of Instrument	Calibration Certificated No.	Date of Calibration
Multimeter	~~289C~~	E0233986	CSC248859	15/11/2024
	KEW 6010B			

B. Commissioning Tests

APS Plenum 2 ESP Sub-assembly: 1

Item	Test Conductor	P19 (COLLECTOR) ohm
1	P20 (COLLECTOR)	0.35
2	P21 (COLLECTOR)	0.30
3	P22 (COLLECTOR)	0.46
4	P23 (COLLECTOR)	0.35
5	P24 (COLLECTOR)	0.22
6	P25 (COLLECTOR)	0.18
7	P26 (COLLECTOR)	0.19
8	P27 (COLLECTOR)	0.18
9	P28 (COLLECTOR)	0.18
10	P29 (COLLECTOR)	0.17
11	P30 (COLLECTOR)	0.17
12	P31 (COLLECTOR)	0.18
13	P32 (COLLECTOR)	0.17
14	P33 (COLLECTOR)	0.19
15	P34 (COLLECTOR)	0.16
16	P35 (COLLECTOR)	0.16
17	P36 (COLLECTOR)	0.19

Item	Test Conductor	P37 (COLLECTOR EARTH) ohm
18	P38 (COLLECTOR EARTH)	0.33
19	P39 (COLLECTOR EARTH)	0.3
20	P40 (COLLECTOR EARTH)	0.37
21	P41 (COLLECTOR EARTH)	0.25
22	P42 (COLLECTOR EARTH)	0.25
23	P43 (COLLECTOR EARTH)	0.16
24	P44 (COLLECTOR EARTH)	0.18
25	P45 (COLLECTOR EARTH)	0.43
26	P46 (COLLECTOR EARTH)	0.37
27	P47 (COLLECTOR EARTH)	0.21
28	P48 (COLLECTOR EARTH)	0.16
29	P49 (COLLECTOR EARTH)	0.16
30	P50 (COLLECTOR EARTH)	0.16
31	P51 (COLLECTOR EARTH)	0.29
32	P52 (COLLECTOR EARTH)	0.14
33	P53 (COLLECTOR EARTH)	0.16
34	P54 (COLLECTOR EARTH)	0.19
35	P55 (FRAME)	0.24
36	EARTH	0.28

According to the manufacture's QC report, the resistance of each ESP cell collector or ionizer (from collector/ionizer plate to busbar terminal) should be less than 0.5 ohm, and the APS ESP busbar resistance should be less than or equal to 0.1 ohm. The total passing resistance for ionizer / collector would be the sum of the resistance of two cells (2 cell * 0.5 ohm) and the resistance of the busbar (0.1 ohm). Therefore, the passing criteria of ionizer /collector continuity test is under 1.1 ohm.
The passing criteria between frame plate /collector earth plate and earth is under 0.6 ohm.

C. Comment

Tested / Checked by: (Name of CTA Representative)	Name: Ho Tung	Signature: Ho Tung	Date: 15/07/2025
Witnessed by: (Name of JEC Representative)	Name: John Chan	Signature:	Date: 15/07/2025
Witnessed by: (Name of GCL)	Name: Raymond Lau	Signature:	Date: 15/07/2025
Witnessed by: (Name of AMMJV)	Name: Tam Wing kit	Signature:	Date: 15 JUL 2025
Witnessed by: (Name of)	Name:	Signature:	Date:
Witnessed by: (Name of)	Name:	Signature:	Date:

Gammon

CTA INTERNATIONAL AS CLEAN TUNNEL AIR

AIR PURIFICATION SYSTEM (APS)
ESP FILTER ELECTRICAL TEST INSPECTION CHECK FORM

T&C for ESP Filter

Project: Contract No. HY/2019/13 Central Kowloon Route - Buildings, Electrical and Mechanical Works

RISC NO.: 35147A

Date: 15/07/2025

APS Sub-System : ESP Filter System *

Room Name : plenum 2

Sub-assembly : ESP filter

Location: ~~TVB~~ / HVB/ ~~KVB~~

T&C Plan Ref. No.: J3883-TVS-S-06866

Reference drawing: J3883-TVS-D-01839

Electrical Test - Continuity Test

A.Test instruments

Type	Model	Serial No. of Instrument	Calibration Certificated No.	Date of Calibration
Multimeter	~~289C~~	E0233986	CSC248859	15/11/2024
	KEW 6010B			

B. Commissioning Tests

APS Plenum 2 ESP Sub-assembly: 2

Item	Test Conductor	P1 (IONIZER) ohm	P2 (IONIZER) ohm	P3 (IONIZER) ohm
1	P4 (IONIZER)	0.4	N.A.	N.A.
2	P5 (IONIZER)	N.A.	0.42	N.A.
3	P6 (IONIZER)	N.A.	N.A.	0.24
4	P7 (IONIZER)	0.4	N.A.	N.A.
5	P8 (IONIZER)	N.A.	0.49	N.A.
6	P9 (IONIZER)	N.A.	N.A.	0.29
7	P10 (IONIZER)	0.28	N.A.	N.A.
8	P11 (IONIZER)	N.A.	0.41	N.A.
9	P12 (IONIZER)	N.A.	N.A.	0.54
10	P13 (IONIZER)	1.05	N.A.	N.A.
11	P14 (IONIZER)	N.A.	0.29	N.A.
12	P15 (IONIZER)	N.A.	N.A.	0.27
13	P16 (IONIZER)	0.83	N.A.	N.A.
14	P17 (IONIZER)	N.A.	0.34	N.A.
15	P18 (IONIZER)	N.A.	N.A.	0.28

According to the manufacture's QC report, the resistance of each ESP cell collector or ionizer (from collector/ionizer plate to busbar terminal) should be less than 0.5 ohm, and the APS ESP busbar resistance should be less than or equal to 0.1 ohm. The total passing resistance for ionizer / collector would be the sum of the resistance of two cells (2 cell * 0.5 ohm) and the resistance of the busbar (0.1 ohm).
Therefore, the passing criteria of ionizer /collector continuity test is under 1.1 ohm.
The passing criteria between frame plate /collector earth plate and earth is under 0.6 ohm.

C. Comment

Tested / Checked by: (Name of CTA Representative)	Name: Ho Tung	Signature: Ho Tung	Date: 15/07/2025
Witnessed by: (Name of JEC Representative)	Name: John Chan	Signature:	Date: 15/07/2025
Witnessed by: (Name of GCL	Name: Raymond Lau	Signature:	Date: 15/07/2025
Witnessed by: (Name of AMMJV	Name: Tam Wing Kit	Signature:	Date: 15 JUL 2025
Witnessed by: (Name of	Name:	Signature:	Date:
Witnessed by: (Name of	Name:	Signature:	Date:

Gammon

CTA INTERNATIONAL AS CLEAN TUNNEL AIR

AIR PURIFICATION SYSTEM (APS)
ESP FILTER ELECTRICAL TEST INSPECTION CHECK FORM

T&C for ESP Filter

Project: Contract No. HY/2019/13 Central Kowloon Route - Buildings, Electrical and Mechanical Works

RISC NO.: 35147A

Date: 15/07/2025

APS Sub-System : ESP Filter System *

Room Name : plenum 2

Sub-assembly : ESP filter

Location: ~~YVB~~/ HVB/ ~~KVB~~ *

T&C Plan Ref. No.: J3883-TVS-S-06866

Reference drawing: J3883-TVS-D-01839

Electrical Test - Continuity Test

A. Test instruments

Type	Model	Serial No. of Instrument	Calibration Certificated No.	Date of Calibration
Multimeter	~~2890~~	E0233986	CSC248859	15/11/2024
	KEW 6010B			

B. Commissioning Tests

APS Plenum 2 ESP Sub-assembly: 2

Item	Test Conductor	P19 (COLLECTOR)
1	P20 (COLLECTOR)	0.18
2	P21 (COLLECTOR)	0.14
3	P22 (COLLECTOR)	0.29
4	P23 (COLLECTOR)	0.16
5	P24 (COLLECTOR)	0.17
6	P25 (COLLECTOR)	0.16
7	P26 (COLLECTOR)	0.2
8	P27 (COLLECTOR)	0.14
9	P28 (COLLECTOR)	0.17
10	P29 (COLLECTOR)	0.14
11	P30 (COLLECTOR)	0.17
12	P31 (COLLECTOR)	0.15
13	P32 (COLLECTOR)	0.14
14	P33 (COLLECTOR)	0.14
15	P34 (COLLECTOR)	0.13
16	P35 (COLLECTOR)	0.15
17	P36 (COLLECTOR)	0.14

Item	Test Conductor	P37 (COLLECTOR EARTH)
18	P38 (COLLECTOR EARTH)	0.21
19	P39 (COLLECTOR EARTH)	0.38
20	P40 (COLLECTOR EARTH)	0.29
21	P41 (COLLECTOR EARTH)	0.28
22	P42 (COLLECTOR EARTH)	0.33
23	P43 (COLLECTOR EARTH)	0.34
24	P44 (COLLECTOR EARTH)	0.30
25	P45 (COLLECTOR EARTH)	~~0.317~~ 0.17
26	P46 (COLLECTOR EARTH)	0.24
27	P47 (COLLECTOR EARTH)	0.14
28	P48 (COLLECTOR EARTH)	0.14
29	P49 (COLLECTOR EARTH)	0.19
30	P50 (COLLECTOR EARTH)	0.17
31	P51 (COLLECTOR EARTH)	0.13
32	P52 (COLLECTOR EARTH)	0.18
33	P53 (COLLECTOR EARTH)	0.42
34	P54 (COLLECTOR EARTH)	0.17
35	P55 (FRAME)	0.14
36	EARTH	0.12

According to the manufacture's QC report, the resistance of each ESP cell collector or ionizer (from collector/ionizer plate to busbar terminal) should be less than 0.5 ohm, and the APS ESP busbar resistance should be less than or equal to 0.1 ohm. The total passing resistance for ionizer / collector would be the sum of the resistance of two cells (2 cell * 0.5 ohm) and the resistance of the busbar (0.1 ohm). Therefore, the passing criteria of ionizer /collector continuity test is under 1.1 ohm.
The passing criteria between frame plate /collector earth plate and earth is under 0.6 ohm.

C. Comment

Tested / Checked by: (Name of CTA Representative)	Name: Ho Tung	Signature: Ho Tung	Date: 15/07/2025
Witnessed by: (Name of JEC Representative)	Name: John Chan	Signature:	Date: 15/07/2025
Witnessed by: (Name of GCL)	Name: Raymond Lau	Signature:	Date: 15/07/2025
Witnessed by: (Name of AMMJV)	Name: Tam Wing Kit	Signature:	Date: 15 JUL 2025
Witnessed by: (Name of)	Name:	Signature:	Date:
Witnessed by: (Name of)	Name:	Signature:	Date:

Gammon

CTA INTERNATIONAL AS CLEAN TUNNEL AIR

AIR PURIFICATION SYSTEM (APS)
ESP FILTER ELECTRICAL TEST INSPECTION CHECK FORM

T&C for ESP Filter

Project: Contract No. HY/2019/13 Central Kowloon Route - Buildings, Electrical and Mechanical Works

RISC NO.: 35147A

Date: 15/07/2025

APS Sub-System : ESP Filter System *

Room Name : plenum 2

Sub-assembly : ESP filter

Location: ~~TVB~~/ HVB/ ~~KVB~~

T&C Plan Ref. No.: J3883-TVS-S-06866

Reference drawing: J3883-TVS-D-01839

Electrical Test - Continuity Test

A.Test instruments

Type	Model	Serial No. of Instrument	Calibration Certificated No.	Date of Calibration
Multimeter	~~289C~~	E0233956	CSC248859	15/11/2024
	KEW 6010B			

B. Commissioning Tests

APS Plenum 2 ESP Sub-assembly: 3

Item	Test Conductor	P1 (IONIZER)	P2 (IONIZER)	P3 (IONIZER)
1	P4 (IONIZER)	0.42	N.A.	N.A.
2	P5 (IONIZER)	N.A.	0.36	N.A.
3	P6 (IONIZER)	N.A.	N.A.	0.93
4	P7 (IONIZER)	0.28	N.A.	N.A.
5	P8 (IONIZER)	N.A.	0.37	N.A.
6	P9 (IONIZER)	N.A.	N.A.	0.95
7	P10 (IONIZER)	0.27	N.A.	N.A.
8	P11 (IONIZER)	N.A.	0.72	N.A.
9	P12 (IONIZER)	N.A.	N.A.	0.81
10	P13 (IONIZER)	0.89	N.A.	N.A.
11	P14 (IONIZER)	N.A.	0.54	N.A.
12	P15 (IONIZER)	N.A.	N.A.	1.03
13	P16 (IONIZER)	0.35	N.A.	N.A.
14	P17 (IONIZER)	N.A.	0.9	N.A.
15	P18 (IONIZER)	N.A.	N.A.	0.75

According to the manufacture's QC report, the resistance of each ESP cell collector or ionizer (from collector/ionizer plate to busbar terminal) should be less than 0.5 ohm, and the APS ESP busbar resistance should be less than or equal to 0.1 ohm. The total passing resistance for ionizer / collector would be the sum of the resistance of two cells (2 cell * 0.5 ohm) and the resistance of the busbar (0.1 ohm).
Therefore, the passing criteria of ionizer /collector continuity test is under 1.1 ohm.
The passing criteria between frame plate /collector earth plate and earth is under 0.6 ohm.

C. Comment

Tested / Checked by: (Name of CTA Representative)	Name: Ho Tung	Signature: Ho Tung	Date: 15/07/2025
Witnessed by: (Name of JEC Representative)	Name: John Chan	Signature:	Date: 15/07/2025
Witnessed by: (Name of GCL	Name: Raymond Lau	Signature:	Date: 15/07/2025
Witnessed by: (Name of AMMJV	Name: Tam Wing Kit	Signature:	Date: 15 JUL 2025
Witnessed by: (Name of	Name:	Signature:	Date:
Witnessed by: (Name of	Name:	Signature:	Date:

Gammon

CTA INTERNATIONAL AS CLEAN TUNNEL AIR

AIR PURIFICATION SYSTEM (APS)

ESP FILTER ELECTRICAL TEST INSPECTION CHECK FORM

T&C for ESP Filter

Project: Contract No. HY/2019/13 Central Kowloon Route - Buildings, Electrical and Mechanical Works

RISC NO.: 35147A

Date: 15/07/2025

APS Sub-System : ESP Filter System *

Room Name : plenum 2

Sub-assembly : ESP filter

Location: ~~YVB~~/ HVB/ ~~KVB~~ *

T&C Plan Ref. No.: J3883-TVS-S-06866

Reference drawing: J3883-TVS-D-01839

Electrical Test - Continuity Test

A. Test instruments

Type	Model	Serial No. of Instrument	Calibration Certificated No.	Date of Calibration
Multimeter	~~289C~~	E0233986	CSC 248359	15/11/2024
	KEW 6010B			

B. Commissioning Tests

APS Plenum 2 ESP Sub-assembly: 3

Item	Test Conductor	P19 (COLLECTOR) ohm
1	P20 (COLLECTOR)	0.19
2	P21 (COLLECTOR)	0.2
3	P22 (COLLECTOR)	0.14
4	P23 (COLLECTOR)	0.15
5	P24 (COLLECTOR)	0.17
6	P25 (COLLECTOR)	0.31
7	P26 (COLLECTOR)	0.19
8	P27 (COLLECTOR)	0.18
9	P28 (COLLECTOR)	0.14
10	P29 (COLLECTOR)	0.18
11	P30 (COLLECTOR)	0.13
12	P31 (COLLECTOR)	0.14
13	P32 (COLLECTOR)	0.14
14	P33 (COLLECTOR)	0.13
15	P34 (COLLECTOR)	0.14
16	P35 (COLLECTOR)	0.13
17	P36 (COLLECTOR)	0.13

Item	Test Conductor	P37 (COLLECTOR EARTH) ohm
18	P38 (COLLECTOR EARTH)	0.14
19	P39 (COLLECTOR EARTH)	0.15
20	P40 (COLLECTOR EARTH)	0.17
21	P41 (COLLECTOR EARTH)	0.14
22	P42 (COLLECTOR EARTH)	0.14
23	P43 (COLLECTOR EARTH)	0.14
24	P44 (COLLECTOR EARTH)	0.16
25	P45 (COLLECTOR EARTH)	0.16
26	P46 (COLLECTOR EARTH)	0.25
27	P47 (COLLECTOR EARTH)	0.14
28	P48 (COLLECTOR EARTH)	0.13
29	P49 (COLLECTOR EARTH)	0.13
30	P50 (COLLECTOR EARTH)	0.13
31	P51 (COLLECTOR EARTH)	0.13
32	P52 (COLLECTOR EARTH)	0.14
33	P53 (COLLECTOR EARTH)	0.14
34	P54 (COLLECTOR EARTH)	0.14
35	P55 (FRAME)	0.22
36	EARTH	0.17

According to the manufacture's QC report, the resistance of each ESP cell collector or ionizer (from collector/ionizer plate to busbar terminal) should be less than 0.5 ohm, and the APS ESP busbar resistance should be less than or equal to 0.1 ohm. The total passing resistance for ionizer / collector would be the sum of the resistance of two cells (2 cell * 0.5 ohm) and the resistance of the busbar (0.1 ohm). Therefore, the passing criteria of ionizer /collector continuity test is under 1.1 ohm.
The passing criteria between frame plate /collector earth plate and earth is under 0.6 ohm.

C. Comment

Tested / Checked by: (Name of CTA Representative)	Name: Ho Tung	Signature: Ho Tung	Date: 15/07/2025
Witnessed by: (Name of JEC Representative)	Name: John Chan	Signature:	Date: 15/07/2025
Witnessed by: (Name of GCL)	Name: Raymond Lau	Signature:	Date: 15/07/2025
Witnessed by: (Name of AMMJV)	Name: Tam Wing Kit	Signature:	Date: 15 JUL 2025
Witnessed by: (Name of)	Name:	Signature:	Date:
Witnessed by: (Name of)	Name:	Signature:	Date:

Gammon

CTA INTERNATIONAL AS CLEAN TUNNEL AIR

AIR PURIFICATION SYSTEM (APS)
ESP FILTER ELECTRICAL TEST INSPECTION CHECK FORM

T&C for ESP Filter

Project: Contract No. HY/2019/13 Central Kowloon Route - Buildings, Electrical and Mechanical Works

RISC NO.: 35147A

Date: 15/07/2025

APS Sub-System : ESP Filter System *

Room Name : plenum 2

Sub-assembly : ESP filter

Location: ~~TVB~~ / HVB/ ~~KVB~~ *

T&C Plan Ref. No.: J3883-TVS-S-06866

Reference drawing: J3883-TVS-D-01839

Electrical Test - Continuity Test

A.Test instruments

Type	Model	Serial No. of Instrument	Calibration Certificated No.	Date of Calibration
Multimeter	~~289C~~	E0233986	CSC248859	15/11/2024
	KEW 6010B			

B. Commissioning Tests

APS Plenum 2 ESP Sub-assembly: 4

Item	Test Conductor	P1 (IONIZER) ohm (Ω)	P2 (IONIZER) ohm (Ω)	P3 (IONIZER) ohm (Ω)
1	P4 (IONIZER)	0.4	N.A.	N.A.
2	P5 (IONIZER)	N.A.	1.03	N.A.
3	P6 (IONIZER)	N.A.	N.A.	0.29
4	P7 (IONIZER)	0.53	N.A.	N.A.
5	P8 (IONIZER)	N.A.	0.58	N.A.
6	P9 (IONIZER)	N.A.	N.A.	0.27
7	P10 (IONIZER)	0.58	N.A.	N.A.
8	P11 (IONIZER)	N.A.	0.30	N.A.
9	P12 (IONIZER)	N.A.	N.A.	0.55
10	P13 (IONIZER)	0.26	N.A.	N.A.
11	P14 (IONIZER)	N.A.	0.36	N.A.
12	P15 (IONIZER)	N.A.	N.A.	0.30
13	P16 (IONIZER)	0.52	N.A.	N.A.
14	P17 (IONIZER)	N.A.	0.34	N.A.
15	P18 (IONIZER)	N.A.	N.A.	0.33

According to the manufacture's QC report, the resistance of each ESP cell collector or ionizer (from collector/ionizer plate to busbar terminal) should be less than 0.5 ohm, and the APS ESP busbar resistance should be less than or equal to 0.1 ohm. The total passing resistance for ionizer / collector would be the sum of the resistance of two cells (2 cell * 0.5 ohm) and the resistance of the busbar (0.1 ohm).
Therefore, the passing criteria of ionizer /collector continuity test is under 1.1 ohm.
The passing criteria between frame plate /collector earth plate and earth is under 0.6 ohm.

C. Comment

Tested / Checked by: (Name of CTA Representative)	Name: Ho Tung	Signature: Ho Tung	Date: 15/07/2025
Witnessed by: (Name of JEC Representative)	Name: John Chan	Signature:	Date: 15/07/2025
Witnessed by: (Name of GCL	Name: Raymond Lau	Signature:	Date: 15/07/2025
Witnessed by: (Name of AMMJV	Name: Tam Wing Kit	Signature:	Date: 15 JUL 2025
Witnessed by: (Name of	Name:	Signature:	Date:
Witnessed by: (Name of	Name:	Signature:	Date:

Gammon

CTA INTERNATIONAL AS CLEAN TUNNEL AIR

AIR PURIFICATION SYSTEM (APS)

ESP FILTER ELECTRICAL TEST INSPECTION CHECK FORM

T&C for ESP Filter

Project: Contract No. HY/2019/13 Central Kowloon Route - Buildings, Electrical and Mechanical Works

RISC NO.: 35147A

Date: 15/07/2025

APS Sub-System : ESP Filter System *

Room Name : plenum 2

Sub-assembly : ESP filter

Location: ~~YVB~~/ HVB/ ~~KVB~~ *

T&C Plan Ref. No.: J3883-TVS-S-06866

Reference drawing: J3883-TVS-D-01839

Electrical Test - Continuity Test

A. Test instruments

Type	Model	Serial No. of Instrument	Calibration Certificated No.	Date of Calibration
Multimeter	~~289C~~	E0253986	CSC248859	15/11/2024
	KEW 6010B			

B. Commissioning Tests

APS Plenum 2 ESP Sub-assembly: 4

Item	Test Conductor	P19 (COLLECTOR)
1	P20 (COLLECTOR)	0.18
2	P21 (COLLECTOR)	0.22
3	P22 (COLLECTOR)	0.35
4	P23 (COLLECTOR)	0.19
5	P24 (COLLECTOR)	0.18
6	P25 (COLLECTOR)	0.19
7	P26 (COLLECTOR)	0.24
8	P27 (COLLECTOR)	0.21
9	P28 (COLLECTOR)	0.19
10	P29 (COLLECTOR)	0.27
11	P30 (COLLECTOR)	0.45
12	P31 (COLLECTOR)	0.28
13	P32 (COLLECTOR)	0.28
14	P33 (COLLECTOR)	0.25
15	P34 (COLLECTOR)	0.2
16	P35 (COLLECTOR)	0.23
17	P36 (COLLECTOR)	0.21

Item	Test Conductor	P37 (COLLECTOR EARTH)
18	P38 (COLLECTOR EARTH)	0.36
19	P39 (COLLECTOR EARTH)	0.226
20	P40 (COLLECTOR EARTH)	0.24
21	P41 (COLLECTOR EARTH)	0.23
22	P42 (COLLECTOR EARTH)	0.17
23	P43 (COLLECTOR EARTH)	0.2
24	P44 (COLLECTOR EARTH)	0.21
25	P45 (COLLECTOR EARTH)	0.22
26	P46 (COLLECTOR EARTH)	0.19
27	P47 (COLLECTOR EARTH)	0.16
28	P48 (COLLECTOR EARTH)	0.17
29	P49 (COLLECTOR EARTH)	0.44
30	P50 (COLLECTOR EARTH)	0.14
31	P51 (COLLECTOR EARTH)	0.15
32	P52 (COLLECTOR EARTH)	0.14
33	P53 (COLLECTOR EARTH)	0.14
34	P54 (COLLECTOR EARTH)	0.14
35	P55 (FRAME)	0.14
36	EARTH	0.13

According to the manufacture's QC report, the resistance of each ESP cell collector or ionizer (from collector/ionizer plate to busbar terminal) should be less than 0.5 ohm, and the APS ESP busbar resistance should be less than or equal to 0.1 ohm. The total passing resistance for ionizer / collector would be the sum of the resistance of two cells (2 cell * 0.5 ohm) and the resistance of the busbar (0.1 ohm). Therefore, the passing criteria of ionizer /collector continuity test is under 1.1 ohm.
The passing criteria between frame plate /collector earth plate and earth is under 0.6 ohm.

C. Comment

Tested / Checked by: (Name of CTA Representative)	Name: Ho Tung	Signature: Ho Tung	Date: 15/07/2025
Witnessed by: (Name of JEC Representative)	Name: John Chan	Signature:	Date: 15/07/2025
Witnessed by: (Name of GCL)	Name: Raymond Lau	Signature:	Date: 15/07/2025
Witnessed by: (Name of AMMJV)	Name: Tam Wing Kit	Signature:	Date: 15 JUL 2025
Witnessed by: (Name of)	Name:	Signature:	Date:
Witnessed by: (Name of)	Name:	Signature:	Date:

Gammon

CTA INTERNATIONAL AS CLEAN TUNNEL AIR

AIR PURIFICATION SYSTEM (APS)
ESP FILTER ELECTRICAL TEST INSPECTION CHECK FORM

T&C for ESP Filter

Project: Contract No. HY/2019/13 Central Kowloon Route - Buildings, Electrical and Mechanical Works

RISC NO.: 35147A

Date: 15/07/2025

APS Sub-System : ESP Filter System *

Room Name : plenum 2

Sub-assembly : ESP filter

Location: ~~YVB~~/ HVB/ ~~KVB~~ *

T&C Plan Ref. No.: J3883-TVS-S-06866

Reference drawing: J3883-TVS-D-01839

Electrical Test - Continuity Test

A.Test instruments

Type	Model	Serial No. of Instrument	Calibration Certificated No.	Date of Calibration
Multimeter	~~289C~~	E0233986	CSC248859	15/11/2024
	KEW 6010B			

B. Commissioning Tests

APS Plenum 2 ESP Sub-assembly: 5

Item	Test Conductor	P1 (IONIZER)	P2 (IONIZER)	P3 (IONIZER)
1	P4 (IONIZER)	0.9	N.A.	N.A.
2	P5 (IONIZER)	N.A.	0.98	N.A.
3	P6 (IONIZER)	N.A.	N.A.	0.58
4	P7 (IONIZER)	0.89	N.A.	N.A.
5	P8 (IONIZER)	N.A.	0.27	N.A.
6	P9 (IONIZER)	N.A.	N.A.	0.93
7	P10 (IONIZER)	0.98	N.A.	N.A.
8	P11 (IONIZER)	N.A.	1.01	N.A.
9	P12 (IONIZER)	N.A.	N.A.	0.90
10	P13 (IONIZER)	0.95	N.A.	N.A.
11	P14 (IONIZER)	N.A.	1.02	N.A.
12	P15 (IONIZER)	N.A.	N.A.	1.01
13	P16 (IONIZER)	0.91	N.A.	N.A.
14	P17 (IONIZER)	N.A.	0.64	N.A.
15	P18 (IONIZER)	N.A.	N.A.	0.71

According to the manufacture's QC report, the resistance of each ESP cell collector or ionizer (from collector/ionizer plate to busbar terminal) should be less than 0.5 ohm, and the APS ESP busbar resistance should be less than or equal to 0.1 ohm. The total passing resistance for ionizer / collector would be the sum of the resistance of two cells (2 cell * 0.5 ohm) and the resistance of the busbar (0.1 ohm).
Therefore, the passing criteria of ionizer /collector continuity test is under 1.1 ohm.
The passing criteria between frame plate /collector earth plate and earth is under 0.6 ohm.

C. Comment

Tested / Checked by: (Name of CTA Representative)	Name: Ho Tung	Signature: Ho Tung	Date: 15/07/2025
Witnessed by: (Name of JEC Representative)	Name: John Chan	Signature:	Date: 15/07/2025
Witnessed by: (Name of GCL	Name: Raymond Lau	Signature:	Date: 15/07/2025
Witnessed by: (Name of AMMJV	Name: Tam Wing Kit	Signature:	Date: 15 JUL 2025
Witnessed by: (Name of	Name:	Signature:	Date:
Witnessed by: (Name of	Name:	Signature:	Date:

Gammon

CTA INTERNATIONAL AS CLEAN TUNNEL AIR

AIR PURIFICATION SYSTEM (APS)
ESP FILTER ELECTRICAL TEST INSPECTION CHECK FORM

T&C for ESP Filter

Project: Contract No. HY/2019/13 Central Kowloon Route - Buildings, Electrical and Mechanical Works

RISC NO.: 35147A

Date: 15/07/2025

APS Sub-System : ESP Filter System *

Room Name : plenum 2

Sub-assembly : ESP filter

Location: ~~YVB~~/ HVB/ ~~KVB~~ *

T&C Plan Ref. No.: J3883-TVS-S-06866

Reference drawing: J3883-TVS-D-01839

Electrical Test - Continuity Test

A. Test instruments

Type	Model	Serial No. of Instrument	Calibration Certificated No.	Date of Calibration
Multimeter	~~289C~~	E0233986	CSC248859	15/11/2025
	KEW 6010B			

B. Commissioning Tests

APS Plenum 2 ESP Sub-assembly: 5

Item	Test Conductor	P19 (COLLECTOR) ohm
1	P20 (COLLECTOR)	0.17
2	P21 (COLLECTOR)	0.18
3	P22 (COLLECTOR)	0.16
4	P23 (COLLECTOR)	0.24
5	P24 (COLLECTOR)	0.15
6	P25 (COLLECTOR)	0.18
7	P26 (COLLECTOR)	0.16
8	P27 (COLLECTOR)	0.16
9	P28 (COLLECTOR)	0.15
10	P29 (COLLECTOR)	0.15
11	P30 (COLLECTOR)	0.16
12	P31 (COLLECTOR)	0.14
13	P32 (COLLECTOR)	0.15
14	P33 (COLLECTOR)	0.13
15	P34 (COLLECTOR)	0.17
16	P35 (COLLECTOR)	0.14
17	P36 (COLLECTOR)	0.14

Item	Test Conductor	P37 (COLLECTOR EARTH) ohm
18	P38 (COLLECTOR EARTH)	0.23
19	P39 (COLLECTOR EARTH)	0.17
20	P40 (COLLECTOR EARTH)	0.19
21	P41 (COLLECTOR EARTH)	0.18
22	P42 (COLLECTOR EARTH)	0.21
23	P43 (COLLECTOR EARTH)	0.44
24	P44 (COLLECTOR EARTH)	0.19
25	P45 (COLLECTOR EARTH)	0.19
26	P46 (COLLECTOR EARTH)	0.14
27	P47 (COLLECTOR EARTH)	0.15
28	P48 (COLLECTOR EARTH)	0.14
29	P49 (COLLECTOR EARTH)	0.34
30	P50 (COLLECTOR EARTH)	0.15
31	P51 (COLLECTOR EARTH)	0.17
32	P52 (COLLECTOR EARTH)	0.15
33	P53 (COLLECTOR EARTH)	0.14
34	P54 (COLLECTOR EARTH)	0.14
35	P55 (FRAME)	0.14
36	EARTH	0.15

According to the manufacture's QC report, the resistance of each ESP cell collector or ionizer (from collector/ionizer plate to busbar terminal) should be less than 0.5 ohm, and the APS ESP busbar resistance should be less than or equal to 0.1 ohm. The total passing resistance for ionizer / collector would be the sum of the resistance of two cells (2 cell * 0.5 ohm) and the resistance of the busbar (0.1 ohm). Therefore, the passing criteria of ionizer /collector continuity test is under 1.1 ohm.
The passing criteria between frame plate /collector earth plate and earth is under 0.6 ohm.

C. Comment

Tested / Checked by: (Name of CTA Representative)	Name: Ho Tung	Signature: Ho Tung	Date: 15/07/2025
Witnessed by: (Name of JEC Representative)	Name: Sohn Chan	Signature:	Date: 15/07/2025
Witnessed by: (Name of GCL)	Name: Raymond Lau	Signature:	Date: 15/07/2025
Witnessed by: (Name of AMMJV)	Name: Tam Wing Kit	Signature:	Date: 15 JUL 2025
Witnessed by: (Name of)	Name:	Signature:	Date:
Witnessed by: (Name of)	Name:	Signature:	Date:

Gammon

CTA INTERNATIONAL AS CLEAN TUNNEL AIR

AIR PURIFICATION SYSTEM (APS)
ESP FILTER 1ST FIXING INSPECTION CHECK FORM

T&C for ESP Filter

Project:	Contract No. HY/2019/13 Central Kowloon Route - Buildings, Electrical and Mechanical Works	RISC NO.:	033290 A
		Date:	23 Oct 2025
APS Sub-System :	ESP Filter System *	Room Name :	Plenum 3
Location:	~~YVB~~ / HVB/ ~~KVB~~ *		
T&C Plan Ref. No.:	J3883-TVS-S-02893		
Reference drawing:	J3883-TVS-D-01839		

A. ESP Cells Serial No. test form — Sub-assembly : A

Brand Name : CTA — Model No.: CTA ESP

Items	Location		ESP Cell Serial no.
	Column	Row	
1)	1	1	0388002324 090896
2)	1	2	0388002324 090874
3)	1	3	0388002324 080759
4)	1	4	0388002324 080780
5)	1	5	0388002324 080835
6)	1	6	0388002324 080792
7)	2	1	0388002324 080811
8)	2	2	0388002324 080801
9)	2	3	0388002324 080868
10)	2	4	0388002324 080819
11)	2	5	0388002324 080773
12)	2	6	0388002324 090871
13)	3	1	0388002324 080821
14)	3	2	0388002324 080802
15)	3	3	0388002324 080793
16)	3	4	0388002324 080772
17)	3	5	0388002324 090898
18)	3	6	0388002324 090893

B. Comment

Tested / Checked by: (Name of CTA Representative)	Name: Johnny Kwong	Signature:	Date: 23/10/25
Witnessed by: (Name of JEC Representative)	Name: John Chan	Signature:	Date: 23/10/25
Witnessed by: (Name of GCL)	Name: Raymond L	Signature:	Date: 23/10/25
Witnessed by: (Name of AMMJV)	Name: Arthur DAM	Signature:	Date: 23/10/25
Witnessed by: (Name of)	Name:	Signature:	Date:
Witnessed by: (Name of)	Name:	Signature:	Date:

Gammon

CTA INTERNATIONAL AS CLEAN TUNNEL AIR

AIR PURIFICATION SYSTEM (APS)
ESP FILTER 1ST FIXING INSPECTION CHECK FORM

T&C for ESP Filter

Project:	Contract No. HY/2019/13 Central Kowloon Route - Buildings, Electrical and Mechanical Works	RISC NO.:	033290 A
		Date:	23 Oct 2025
APS Sub-System :	ESP Filter System *	Room Name :	Plenum 3
Location:	~~YVB~~ / HVB/ ~~KVB~~ *		
T&C Plan Ref. No.:	J3883-TVS-S-02893		
Reference drawing:	J3883-TVS-D-01839		

A. ESP Cells Serial No. test form — Sub-assembly : B

Brand Name : CTA — Model No.: CTA ESP

Items	Location		ESP Cell Serial no.
	Column	Row	
1)	1	1	0388002324 080855
2)	1	2	0388002324 090887
3)	1	3	0388002324 080765
4)	1	4	0388002324 080815
5)	1	5	0388002324 080768
6)	1	6	0388002324 080798
7)	2	1	0388002324 080864
8)	2	2	0388002324 080769
9)	2	3	0388002324 080760
10)	2	4	0388002324 090895
11)	2	5	0388002324 080797
12)	2	6	0388002324 090894
13)	3	1	0388002324 080844
14)	3	2	0388002324 090883
15)	3	3	0388002324 080767
16)	3	4	0388002324 080830
17)	3	5	0388002324 080823
18)	3	6	0388002324 080805

B. Comment

Tested / Checked by: (Name of CTA Representative)	Name: Johnny Kung	Signature:	Date: 23/10/25
Witnessed by: (Name of JEC Representative)	Name: John Chan	Signature:	Date: 23/10/25
Witnessed by: (Name of GCL)	Name: Raymond Law	Signature:	Date: 23/10/25
Witnessed by: (Name of AMMSV)	Name: Arthur LAM	Signature:	Date: 23/10/25
Witnessed by: (Name of)	Name:	Signature:	Date:
Witnessed by: (Name of)	Name:	Signature:	Date:

Gammon

CTA INTERNATIONAL AS CLEAN TUNNEL AIR

AIR PURIFICATION SYSTEM (APS)
ESP FILTER 1ST FIXING INSPECTION CHECK FORM

T&C for ESP Filter

Project:	Contract No. HY/2019/13 Central Kowloon Route - Buildings, Electrical and Mechanical Works	RISC NO.:	033290/A
		Date:	23 Oct 2025
APS Sub-System :	ESP Filter System *	Room Name :	Plenum 3
Location:	~~YVB~~ / HVB/ ~~KVB~~ *		
T&C Plan Ref. No.:	J3883-TVS-S-02893		
Reference drawing:	J3883-TVS-D-01839		

A. ESP Cells Serial No. test form — Sub-assembly : C

Brand Name : CTA — Model No.: CTA ESP

Items	Location		ESP Cell Serial no.
	Column	Row	
1)	1	1	0388002324 101023
2)	1	2	0388002324 090931
3)	1	3	0388002324 090987
4)	1	4	0388002324 090975
5)	1	5	0388002324 090934
6)	1	6	0388002324 090969
7)	2	1	0388002324 090967
8)	2	2	0388002324 090993
9)	2	3	0388002324 090964
10)	2	4	0388002324 090962
11)	2	5	0388002324 090976
12)	2	6	0388002324 090946
13)	3	1	0388002324 090944
14)	3	2	0388002324 090906
15)	3	3	0388002324 080851
16)	3	4	0388002324 090963
17)	3	5	0388002324 090985
18)	3	6	0388002324 090950

B. Comment

Tested / Checked by: (Name of CTA Representative)	Name: Johnny Kung	Signature:	Date: 23/10/25
Witnessed by: (Name of JEC Representative)	Name: John Chen	Signature:	Date: 23/10/25
Witnessed by: (Name of GCL)	Name: Raymond L	Signature:	Date: 23/10/25
Witnessed by: (Name of AMMSV)	Name: Arthur LAM	Signature: Arthur	Date: 23/10/25
Witnessed by: (Name of)	Name:	Signature:	Date:
Witnessed by: (Name of)	Name:	Signature:	Date:

Gammon

CTA INTERNATIONAL AS CLEAN TUNNEL AIR

AIR PURIFICATION SYSTEM (APS)
ESP FILTER 1ST FIXING INSPECTION CHECK FORM

T&C for ESP Filter

Project:	Contract No. HY/2019/13 Central Kowloon Route - Buildings, Electrical and Mechanical Works	RISC NO.:	033290A
		Date:	23 Oct 2025
APS Sub-System :	ESP Filter System *	Room Name :	Plenum 3
Location:	~~YVB~~ / HVB/ ~~KVB~~ *		
T&C Plan Ref. No.:	J3883-TVS-S-02893		
Reference drawing:	J3883-TVS-D-01839		

A. ESP Cells Serial No. test form

Sub-assembly : D

Brand Name : CTA

Model No.: CTA ESP

Items	Location		ESP Cell Serial no.
	Column	Row	
1)	1	1	0388002324 080847
2)	1	2	0388002324 090888
3)	1	3	0388002324 080843
4)	1	4	0388002324 080794
5)	1	5	0388002324 080758
6)	1	6	0388002324 080795
7)	2	1	0388002324 090902
8)	2	2	0388002324 090879
9)	2	3	0388002324 080818
10)	2	4	0388002324 080796
11)	2	5	0388002324 080764
12)	2	6	0388002324 090882
13)	3	1	0388002324 080775
14)	3	2	0388002324 080779
15)	3	3	0388002324 080804
16)	3	4	0388002324 080814
17)	3	5	0388002324 080826
18)	3	6	0388002324 080790

B. Comment

Tested / Checked by: (Name of CTA Representative)	Name: Johnny Kwang	Signature:	Date: 23/10/25
Witnessed by: (Name of JEC Representative)	Name: John Chu	Signature:	Date: 23/10/25
Witnessed by: (Name of BCL)	Name: Raymond L	Signature:	Date: 23/10/25
Witnessed by: (Name of AMMJV)	Name: Arthur LAM	Signature:	Date: 23/10/25
Witnessed by: (Name of)	Name:	Signature:	Date:
Witnessed by: (Name of)	Name:	Signature:	Date:

Gammon

CTA INTERNATIONAL AS CLEAN TUNNEL AIR

AIR PURIFICATION SYSTEM (APS)
ESP FILTER 1ST FIXING INSPECTION CHECK FORM

T&C for ESP Filter

Project:	Contract No. HY/2019/13 Central Kowloon Route - Buildings, Electrical and Mechanical Works	RISC NO.:	033290 A
		Date:	23 Oct 2025
APS Sub-System :	ESP Filter System *	Room Name :	Plenum 3
Location:	~~YVB~~ / HVB/ ~~KVB~~ *		
T&C Plan Ref. No.:	J3883-TVS-S-02893		
Reference drawing:	J3883-TVS-D-01839		

A. ESP Cells Serial No. test form

Sub-assembly : E

Brand Name : CTA

Model No.: CTA ESP

Items	Location		ESP Cell Serial no.
	Column	Row	
1)	1	1	0388002324 090886
2)	1	2	0388002324 080800
3)	1	3	0388002324 090870
4)	1	4	0388002324 080756
5)	1	5	0388002324 090901
6)	1	6	0388002324 080787
7)	2	1	0388002324 080777
8)	2	2	0388002324 080832
9)	2	3	0388002324 090889
10)	2	4	0388002324 080786
11)	2	5	0388002324 080817
12)	2	6	0388002324 080861
13)	3	1	0388002324 090877
14)	3	2	0388002324 080803
15)	3	3	0388002324 080812
16)	3	4	0388002324 080808
17)	3	5	0388002324 080854
18)	3	6	0388002324 080828

B. Comment

Tested / Checked by: (Name of CTA Representative)	Name: Johnny Kwong	Signature:	Date: 23/10/25
Witnessed by: (Name of JEC Representative)	Name: John Chan	Signature:	Date: 23/10/25
Witnessed by: (Name of Gal L)	Name: Raymond L	Signature:	Date: 23/10/25
Witnessed by: (Name of AMMJV)	Name: Arthur LAM	Signature:	Date: 23/10/25
Witnessed by: (Name of)	Name:	Signature:	Date:
Witnessed by: (Name of)	Name:	Signature:	Date:

Gammon

CTA INTERNATIONAL AS CLEAN TUNNEL AIR

AIR PURIFICATION SYSTEM (APS)
ESP FILTER ELECTRICAL TEST INSPECTION CHECK FORM

T&C for ESP Filter

Project: Contract No. HY/2019/13 Central Kowloon Route - Buildings, Electrical and Mechanical Works

RISC NO.: 35148A

Date: 15/07/2025

APS Sub-System : ESP Filter System *

Room Name : plenum 3

Sub-assembly : ESP filter

Location: ~~YVB~~/ HVB/ ~~KVB~~ *

T&C Plan Ref. No.: J3883-TVS-S-06866

Reference drawing: J3883-TVS-D-01839

Electrical Test - Continuity Test

A.Test instruments

Type	Model	Serial No. of Instrument	Calibration Certificated No.	Date of Calibration
Multimeter	~~289C~~ KEW 6010B	E0233986	CSC248859	15/11/2024

B. Commissioning Tests

APS Plenum 3 ESP Sub-assembly: 1

Item	Test Conductor	P1 (IONIZER) ohm	P2 (IONIZER) ohm	P3 (IONIZER) ohm
1	P4 (IONIZER)	0.37	N.A.	N.A.
2	P5 (IONIZER)	N.A.	0.33	N.A.
3	P6 (IONIZER)	N.A.	N.A.	0.49
4	P7 (IONIZER)	0.38	N.A.	N.A.
5	P8 (IONIZER)	N.A.	0.35	N.A.
6	P9 (IONIZER)	N.A.	N.A.	0.51
7	P10 (IONIZER)	0.43	N.A.	N.A.
8	P11 (IONIZER)	N.A.	0.42	N.A.
9	P12 (IONIZER)	N.A.	N.A.	0.54
10	P13 (IONIZER)	0.47	N.A.	N.A.
11	P14 (IONIZER)	N.A.	0.32	N.A.
12	P15 (IONIZER)	N.A.	N.A.	0.55
13	P16 (IONIZER)	0.43	N.A.	N.A.
14	P17 (IONIZER)	N.A.	0.37	N.A.
15	P18 (IONIZER)	N.A.	N.A.	0.67

According to the manufacture's QC report, the resistance of each ESP cell collector or ionizer (from collector/ionizer plate to busbar terminal) should be less than 0.5 ohm, and the APS ESP busbar resistance should be less than or equal to 0.1 ohm. The total passing resistance for ionizer / collector would be the sum of the resistance of two cells (2 cell × 0.5 ohm) and the resistance of the busbar (0.1 ohm).
Therefore, the passing criteria of ionizer /collector continuity test is under 1.1 ohm.
The passing criteria between frame plate /collector earth plate and earth is under 0.6 ohm.

C. Comment

Tested / Checked by: (Name of CTA Representative)	Name: Ho Tung	Signature: Ho Tung	Date: 15/07/2025
Witnessed by: (Name of JEC Representative)	Name: John Chan	Signature:	Date: 15/07/2025
Witnessed by: (Name of GCL	Name: Raymond Lau	Signature:	Date: 15/07/2025
Witnessed by: (Name of AMMJV	Name: Andy Tang	Signature:	Date: 15/07/2025
Witnessed by: (Name of	Name:	Signature:	Date:
Witnessed by: (Name of	Name:	Signature:	Date:

Gammon

CTA INTERNATIONAL AS CLEAN TUNNEL AIR

AIR PURIFICATION SYSTEM (APS)
ESP FILTER ELECTRICAL TEST INSPECTION CHECK FORM

T&C for ESP Filter

Project: Contract No. HY/2019/13 Central Kowloon Route - Buildings, Electrical and Mechanical Works

RISC NO.: 35148A

Date: 15/07/2025

APS Sub-System : ESP Filter System *

Room Name : plenum 3

Sub-assembly : ESP filter

Location: ~~YVB~~ / HVB/ ~~KVB~~ *

T&C Plan Ref. No.: J3883-TVS-S-06866

Reference drawing: J3883-TVS-D-01839

Electrical Test - Continuity Test

A. Test instruments

Type	Model	Serial No. of Instrument	Calibration Certificated No.	Date of Calibration
Multimeter	~~289C~~ KEW 6010B	E0233986	CSC248859	15/11/2024

B. Commissioning Tests

APS Plenum 3 ESP Sub-assembly: 1

Item	Test Conductor	P19 (COLLECTOR) ohm
1	P20 (COLLECTOR)	0.32
2	P21 (COLLECTOR)	0.36
3	P22 (COLLECTOR)	0.3
4	P23 (COLLECTOR)	0.73
5	P24 (COLLECTOR)	0.36
6	P25 (COLLECTOR)	0.32
7	P26 (COLLECTOR)	0.36
8	P27 (COLLECTOR)	0.35
9	P28 (COLLECTOR)	0.32
10	P29 (COLLECTOR)	0.51
11	P30 (COLLECTOR)	0.37
12	P31 (COLLECTOR)	0.24
13	P32 (COLLECTOR)	0.39
14	P33 (COLLECTOR)	0.41
15	P34 (COLLECTOR)	0.37
16	P35 (COLLECTOR)	0.59
17	P36 (COLLECTOR)	0.26

Item	Test Conductor	P37 (COLLECTOR EARTH) ohm
18	P38 (COLLECTOR EARTH)	0.16
19	P39 (COLLECTOR EARTH)	0.17
20	P40 (COLLECTOR EARTH)	0.14
21	P41 (COLLECTOR EARTH)	0.22
22	P42 (COLLECTOR EARTH)	0.21
23	P43 (COLLECTOR EARTH)	0.21
24	P44 (COLLECTOR EARTH)	0.16
25	P45 (COLLECTOR EARTH)	0.47
26	P46 (COLLECTOR EARTH)	0.17
27	P47 (COLLECTOR EARTH)	0.15
28	P48 (COLLECTOR EARTH)	0.16
29	P49 (COLLECTOR EARTH)	0.15
30	P50 (COLLECTOR EARTH)	0.19
31	P51 (COLLECTOR EARTH)	0.18
32	P52 (COLLECTOR EARTH)	0.19
33	P53 (COLLECTOR EARTH)	0.15
34	P54 (COLLECTOR EARTH)	0.15
35	P55 (FRAME)	0.14
36	EARTH	0.14

According to the manufacture's QC report, the resistance of each ESP cell collector or ionizer (from collector/ionizer plate to busbar terminal) should be less than 0.5 ohm, and the APS ESP busbar resistance should be less than or equal to 0.1 ohm. The total passing resistance for ionizer / collector would be the sum of the resistance of two cells (2 cell * 0.5 ohm) and the resistance of the busbar (0.1 ohm). Therefore, the passing criteria of ionizer /collector continuity test is under 1.1 ohm.
The passing criteria between frame plate /collector earth plate and earth is under 0.6 ohm.

C. Comment

Tested / Checked by: (Name of CTA Representative)	Name: Ho Tung	Signature: Ho Tung	Date: 15/07/2025
Witnessed by: (Name of JEC Representative)	Name: John Chan	Signature:	Date: 15/07/2025
Witnessed by: (Name of GCL)	Name: Raymond Lau	Signature:	Date: 15/07/2025
Witnessed by: (Name of AMNJV)	Name: Andy Tang	Signature:	Date: 15/07/2025
Witnessed by: (Name of)	Name:	Signature:	Date:
Witnessed by: (Name of)	Name:	Signature:	Date:

Gammon

CTA INTERNATIONAL AS CLEAN TUNNEL AIR

AIR PURIFICATION SYSTEM (APS)
ESP FILTER ELECTRICAL TEST INSPECTION CHECK FORM

T&C for ESP Filter

Project: Contract No. HY/2019/13 Central Kowloon Route - Buildings, Electrical and Mechanical Works

RISC NO.: 35148A

Date: 15/07/2025

APS Sub-System : ESP Filter System *

Room Name : plenum 3

Sub-assembly : ESP filter

Location: ~~YVB~~/ HVB/ ~~KVB~~ *

T&C Plan Ref. No.: J3883-TVS-S-06866

Reference drawing: J3883-TVS-D-01839

Electrical Test - Continuity Test

A.Test instruments

Type	Model	Serial No. of Instrument	Calibration Certificated No.	Date of Calibration
Multimeter	~~289C~~ KEW 6010B	E0233986	CSC248859	15/11/2024

B. Commissioning Tests

APS Plenum 3 ESP Sub-assembly: 2

Item	Test Conductor	P1 (IONIZER) ohm	P2 (IONIZER) ohm	P3 (IONIZER) ohm
1	P4 (IONIZER)	0.3	N.A.	N.A.
2	P5 (IONIZER)	N.A.	0.42	N.A.
3	P6 (IONIZER)	N.A.	N.A.	0.29
4	P7 (IONIZER)	0.41	N.A.	N.A.
5	P8 (IONIZER)	N.A.	0.33	N.A.
6	P9 (IONIZER)	N.A.	N.A.	0.31
7	P10 (IONIZER)	0.38	N.A.	N.A.
8	P11 (IONIZER)	N.A.	0.31	N.A.
9	P12 (IONIZER)	N.A.	N.A.	0.37
10	P13 (IONIZER)	0.41	N.A.	N.A.
11	P14 (IONIZER)	N.A.	0.65	N.A.
12	P15 (IONIZER)	N.A.	N.A.	0.31
13	P16 (IONIZER)	0.43	N.A.	N.A.
14	P17 (IONIZER)	N.A.	0.32	N.A.
15	P18 (IONIZER)	N.A.	N.A.	0.46

According to the manufacture's QC report, the resistance of each ESP cell collector or ionizer (from collector/ionizer plate to busbar terminal) should be less than 0.5 ohm, and the APS ESP busbar resistance should be less than or equal to 0.1 ohm. The total passing resistance for ionizer / collector would be the sum of the resistance of two cells (2 cell * 0.5 ohm) and the resistance of the busbar (0.1 ohm).
Therefore, the passing criteria of ionizer /collector continuity test is under 1.1 ohm.
The passing criteria between frame plate /collector earth plate and earth is under 0.6 ohm.

C. Comment

Tested / Checked by: (Name of CTA Representative)	Name: Ho Tung	Signature: Ho Tung	Date: 15/07/2025
Witnessed by: (Name of JEC Representative)	Name: John Chan	Signature:	Date: 15/07/2025
Witnessed by: (Name of GCL	Name: Raymond Lau	Signature:	Date: 15/07/2025
Witnessed by: (Name of AMMJV	Name: Andy Tang	Signature: Andy Tang	Date: 15/07/2025
Witnessed by: (Name of	Name:	Signature:	Date:
Witnessed by: (Name of	Name:	Signature:	Date:

Gammon

CTA INTERNATIONAL AS CLEAN TUNNEL AIR

AIR PURIFICATION SYSTEM (APS)
ESP FILTER ELECTRICAL TEST INSPECTION CHECK FORM

T&C for ESP Filter

Project: Contract No. HY/2019/13 Central Kowloon Route - Buildings, Electrical and Mechanical Works

RISC NO.: 35148A

Date: 15/07/2025

APS Sub-System : ESP Filter System *

Room Name : plenum3

Sub-assembly : ESP filter

Location: ~~YVB~~ / HVB/ ~~KVB~~ *

T&C Plan Ref. No.: J3883-TVS-S-06866

Reference drawing: J3883-TVS-D-01839

Electrical Test - Continuity Test

A. Test instruments

Type	Model	Serial No. of Instrument	Calibration Certificated No.	Date of Calibration
Multimeter	~~289C~~ KEW 6010B	E0233986	CSC248859	15/11/2024

B. Commissioning Tests

APS Plenum 3 ESP Sub-assembly: 2

Item	Test Conductor	P19 (COLLECTOR) Ohm
1	P20 (COLLECTOR)	0.43
2	P21 (COLLECTOR)	0.45
3	P22 (COLLECTOR)	0.48
4	P23 (COLLECTOR)	0.39
5	P24 (COLLECTOR)	0.41
6	P25 (COLLECTOR)	0.41
7	P26 (COLLECTOR)	0.46
8	P27 (COLLECTOR)	0.46
9	P28 (COLLECTOR)	0.4
10	P29 (COLLECTOR)	0.81
11	P30 (COLLECTOR)	0.57
12	P31 (COLLECTOR)	0.4
13	P32 (COLLECTOR)	0.49
14	P33 (COLLECTOR)	0.53
15	P34 (COLLECTOR)	0.49
16	P35 (COLLECTOR)	0.55
17	P36 (COLLECTOR)	0.45

Item	Test Conductor	P37 (COLLECTOR EARTH) Ohm
18	P38 (COLLECTOR EARTH)	0.17
19	P39 (COLLECTOR EARTH)	0.26
20	P40 (COLLECTOR EARTH)	0.17
21	P41 (COLLECTOR EARTH)	0.16
22	P42 (COLLECTOR EARTH)	0.15
23	P43 (COLLECTOR EARTH)	0.23
24	P44 (COLLECTOR EARTH)	0.14
25	P45 (COLLECTOR EARTH)	0.14
26	P46 (COLLECTOR EARTH)	0.15
27	P47 (COLLECTOR EARTH)	0.14
28	P48 (COLLECTOR EARTH)	0.14
29	P49 (COLLECTOR EARTH)	0.14
30	P50 (COLLECTOR EARTH)	0.14
31	P51 (COLLECTOR EARTH)	0.16
32	P52 (COLLECTOR EARTH)	0.14
33	P53 (COLLECTOR EARTH)	0.14
34	P54 (COLLECTOR EARTH)	0.15
35	P55 (FRAME)	0.15
36	EARTH	0.31

According to the manufacture's QC report, the resistance of each ESP cell collector or ionizer (from collector/ionizer plate to busbar terminal) should be less than 0.5 ohm, and the APS ESP busbar resistance should be less than or equal to 0.1 ohm. The total passing resistance for ionizer / collector would be the sum of the resistance of two cells (2 cell * 0.5 ohm) and the resistance of the busbar (0.1 ohm). Therefore, the passing criteria of ionizer /collector continuity test is under 1.1 ohm.
The passing criteria between frame plate /collector earth plate and earth is under 0.6 ohm.

C. Comment

Tested / Checked by: (Name of CTA Representative)	Name: Ho Tung	Signature: Ho Tung	Date: 15/07/2025
Witnessed by: (Name of JEC Representative)	Name: John Chan	Signature:	Date: 15/07/2025
Witnessed by: (Name of GCL)	Name: Raymond Lau	Signature:	Date: 15/07/2025
Witnessed by: (Name of AMMJV)	Name: Andy Tang	Signature: Andy Tang	Date: 15/07/2025
Witnessed by: (Name of)	Name:	Signature:	Date:
Witnessed by: (Name of)	Name:	Signature:	Date:

Gammon

CTA INTERNATIONAL AS CLEAN TUNNEL AIR

AIR PURIFICATION SYSTEM (APS)
ESP FILTER ELECTRICAL TEST INSPECTION CHECK FORM

T&C for ESP Filter

Project: Contract No. HY/2019/13 Central Kowloon Route - Buildings, Electrical and Mechanical Works

RISC NO.: 35148A

Date: 15/07/2025

APS Sub-System : ESP Filter System *

Room Name : plenum 3

Sub-assembly : ESP filter

Location: ~~YVB~~/ HVB/ ~~KVB~~

T&C Plan Ref. No.: J3883-TVS-S-06866

Reference drawing: J3883-TVS-D-01839

Electrical Test - Continuity Test

A.Test instruments

Type	Model	Serial No. of Instrument	Calibration Certificated No.	Date of Calibration
Multimeter	~~2890~~ KEW 6010B	E0233986	CSC 2488 59	15/11/2024

B. Commissioning Tests

APS Plenum 3 ESP Sub-assembly: 3

Item	Test Conductor	P1 (IONIZER)	P2 (IONIZER)	P3 (IONIZER)
1	P4 (IONIZER)	0.39	N.A.	N.A.
2	P5 (IONIZER)	N.A.	0.5	N.A.
3	P6 (IONIZER)	N.A.	N.A.	0.75
4	P7 (IONIZER)	0.62	N.A.	N.A.
5	P8 (IONIZER)	N.A.	0.29	N.A.
6	P9 (IONIZER)	N.A.	N.A.	0.98
7	P10 (IONIZER)	0.42	N.A.	N.A.
8	P11 (IONIZER)	N.A.	0.38	N.A.
9	P12 (IONIZER)	N.A.	N.A.	0.78
10	P13 (IONIZER)	0.93	N.A.	N.A.
11	P14 (IONIZER)	N.A.	0.28	N.A.
12	P15 (IONIZER)	N.A.	N.A.	0.86
13	P16 (IONIZER)	0.31	N.A.	N.A.
14	P17 (IONIZER)	N.A.	0.36	N.A.
15	P18 (IONIZER)	N.A.	N.A.	0.77

According to the manufacture's QC report, the resistance of each ESP cell collector or ionizer (from collector/ionizer plate to busbar terminal) should be less than 0.5 ohm, and the APS ESP busbar resistance should be less than or equal to 0.1 ohm. The total passing resistance for ionizer / collector would be the sum of the resistance of two cells (2 cell * 0.5 ohm) and the resistance of the busbar (0.1 ohm).
Therefore, the passing criteria of ionizer /collector continuity test is under 1.1 ohm.
The passing criteria between frame plate /collector earth plate and earth is under 0.6 ohm.

C. Comment

Tested / Checked by: (Name of CTA Representative)	Name: Ho Tung	Signature: Ho Tung	Date: 15/07/2025
Witnessed by: (Name of JEC Representative)	Name: John Chan	Signature:	Date: 15/07/2025
Witnessed by: (Name of GCL	Name: Raymond Lau	Signature:	Date: 15/07/2025
Witnessed by: (Name of AMMJV	Name: Andy Tang	Signature:	Date: 15/07/2025
Witnessed by: (Name of	Name:	Signature:	Date:
Witnessed by: (Name of	Name:	Signature:	Date:

Gammon

CTA INTERNATIONAL AS CLEAN TUNNEL AIR

AIR PURIFICATION SYSTEM (APS)
ESP FILTER ELECTRICAL TEST INSPECTION CHECK FORM

T&C for ESP Filter

Project: Contract No. HY/2019/13 Central Kowloon Route - Buildings, Electrical and Mechanical Works

RISC NO.: 35148A

Date: 15/07/2025

APS Sub-System : ESP Filter System *

Room Name : plenum 3

Sub-assembly : ESP filter

Location: ~~YVB~~ / HVB/ ~~KVB~~ *

T&C Plan Ref. No.: J3883-TVS-S-06866

Reference drawing: J3883-TVS-D-01839

Electrical Test - Continuity Test

A. Test instruments

Type	Model	Serial No. of Instrument	Calibration Certificated No.	Date of Calibration
Multimeter	~~289C~~ KEW 6010B	E0233986	CSC248859	15/11/2024

B. Commissioning Tests

APS Plenum 3 ESP Sub-assembly: 3

Item	Test Conductor	P19 (COLLECTOR) ohm
1	P20 (COLLECTOR)	0.28
2	P21 (COLLECTOR)	0.24
3	P22 (COLLECTOR)	0.22
4	P23 (COLLECTOR)	0.51
5	P24 (COLLECTOR)	0.37
6	P25 (COLLECTOR)	0.51
7	P26 (COLLECTOR)	0.54
8	P27 (COLLECTOR)	0.49
9	P28 (COLLECTOR)	0.6
10	P29 (COLLECTOR)	0.38
11	P30 (COLLECTOR)	0.32
12	P31 (COLLECTOR)	0.24
13	P32 (COLLECTOR)	0.43
14	P33 (COLLECTOR)	0.31
15	P34 (COLLECTOR)	0.64
16	P35 (COLLECTOR)	0.3
17	P36 (COLLECTOR)	0.21

Item	Test Conductor	P37 (COLLECTOR EARTH) ohm
18	P38 (COLLECTOR EARTH)	0.18
19	P39 (COLLECTOR EARTH)	0.17
20	P40 (COLLECTOR EARTH)	0.17
21	P41 (COLLECTOR EARTH)	0.19
22	P42 (COLLECTOR EARTH)	0.15
23	P43 (COLLECTOR EARTH)	0.16
24	P44 (COLLECTOR EARTH)	0.16
25	P45 (COLLECTOR EARTH)	0.19
26	P46 (COLLECTOR EARTH)	0.16
27	P47 (COLLECTOR EARTH)	0.16
28	P48 (COLLECTOR EARTH)	0.16
29	P49 (COLLECTOR EARTH)	0.16
30	P50 (COLLECTOR EARTH)	0.16
31	P51 (COLLECTOR EARTH)	0.15
32	P52 (COLLECTOR EARTH)	0.15
33	P53 (COLLECTOR EARTH)	0.16
34	P54 (COLLECTOR EARTH)	0.17
35	P55 (FRAME)	0.2
36	EARTH	0.14

According to the manufacture's QC report, the resistance of each ESP cell collector or ionizer (from collector/ionizer plate to busbar terminal) should be less than 0.5 ohm, and the APS ESP busbar resistance should be less than or equal to 0.1 ohm. The total passing resistance for ionizer / collector would be the sum of the resistance of two cells (2 cell * 0.5 ohm) and the resistance of the busbar (0.1 ohm). Therefore, the passing criteria of ionizer /collector continuity test is under 1.1 ohm.
The passing criteria between frame plate /collector earth plate and earth is under 0.6 ohm.

C. Comment

Tested / Checked by: (Name of CTA Representative)	Name: Ho Tung	Signature: Ho Tung	Date: 15/07/2025
Witnessed by: (Name of JEC Representative)	Name: John Chan	Signature:	Date: 15/07/2025
Witnessed by: (Name of GCL)	Name: Raymond Lau	Signature:	Date: 15/07/2025
Witnessed by: (Name of AMMJV)	Name: Andy Tang	Signature:	Date: 15/07/2025
Witnessed by: (Name of)	Name:	Signature:	Date:
Witnessed by: (Name of)	Name:	Signature:	Date:

Gammon

CTA INTERNATIONAL AS CLEAN TUNNEL AIR

AIR PURIFICATION SYSTEM (APS)
ESP FILTER ELECTRICAL TEST INSPECTION CHECK FORM

T&C for ESP Filter

Project: Contract No. HY/2019/13 Central Kowloon Route - Buildings, Electrical and Mechanical Works

RISC NO.: 35148A

Date: 15/07/2025

APS Sub-System : ESP Filter System *

Room Name : plenum 3

Sub-assembly : ESP filter

Location: ~~YVB~~ / HVB/ ~~KVB~~

T&C Plan Ref. No.: J3883-TVS-S-06866

Reference drawing: J3883-TVS-D-01839

Electrical Test - Continuity Test

A.Test instruments

Type	Model	Serial No. of Instrument	Calibration Certificated No.	Date of Calibration
Multimeter	~~2850~~	E0233986	CSC24885a	15/11/2024
	KEW 6010B			

B. Commissioning Tests

APS Plenum 3 ESP Sub-assembly: 4

Item	Test Conductor	P1 (IONIZER) ohm	P2 (IONIZER) ohm	P3 (IONIZER) ohm
1	P4 (IONIZER)	0.24	N.A.	N.A.
2	P5 (IONIZER)	N.A.	0.2	N.A.
3	P6 (IONIZER)	N.A.	N.A.	0.57
4	P7 (IONIZER)	0.38	N.A.	N.A.
5	P8 (IONIZER)	N.A.	0.42	N.A.
6	P9 (IONIZER)	N.A.	N.A.	0.32
7	P10 (IONIZER)	0.36	N.A.	N.A.
8	P11 (IONIZER)	N.A.	0.32	N.A.
9	P12 (IONIZER)	N.A.	N.A.	0.72
10	P13 (IONIZER)	0.37	N.A.	N.A.
11	P14 (IONIZER)	N.A.	0.41	N.A.
12	P15 (IONIZER)	N.A.	N.A.	0.30
13	P16 (IONIZER)	0.37	N.A.	N.A.
14	P17 (IONIZER)	N.A.	0.32	N.A.
15	P18 (IONIZER)	N.A.	N.A.	0.33

According to the manufacture's QC report, the resistance of each ESP cell collector or ionizer (from collector/ionizer plate to busbar terminal) should be less than 0.5 ohm, and the APS ESP busbar resistance should be less than or equal to 0.1 ohm. The total passing resistance for ionizer / collector would be the sum of the resistance of two cells (2 cell * 0.5 ohm) and the resistance of the busbar (0.1 ohm).
Therefore, the passing criteria of ionizer /collector continuity test is under 1.1 ohm.
The passing criteria between frame plate /collector earth plate and earth is under 0.6 ohm.

C. Comment

Tested / Checked by: (Name of CTA Representative)	Name: Ho Tung	Signature: Ho Tung	Date: 15/07/2025
Witnessed by: (Name of JEC Representative)	Name: John Chan	Signature:	Date: 15/07/2025
Witnessed by: (Name of GCL	Name: Raymond Lau	Signature:	Date: 15/07/2025
Witnessed by: (Name of AMMJV	Name: Andy Tang	Signature:	Date: 15/07/2025
Witnessed by: (Name of	Name:	Signature:	Date:
Witnessed by: (Name of	Name:	Signature:	Date:

Gammon

CTA INTERNATIONAL AS CLEAN TUNNEL AIR

AIR PURIFICATION SYSTEM (APS)
ESP FILTER ELECTRICAL TEST INSPECTION CHECK FORM

T&C for ESP Filter

Project: Contract No. HY/2019/13 Central Kowloon Route - Buildings, Electrical and Mechanical Works

RISC NO.: 35148A

Date: 15/07/2025

APS Sub-System : ESP Filter System *

Room Name : plenum 3

Sub-assembly : ESP filter

Location: ~~YVB~~ / HVB/ ~~KVB~~ *

T&C Plan Ref. No.: J3883-TVS-S-06866

Reference drawing: J3883-TVS-D-01839

Electrical Test - Continuity Test

A. Test instruments

Type	Model	Serial No. of Instrument	Calibration Certificated No.	Date of Calibration
Multimeter	~~2890~~ 2	E0233486	CSC248859	15/11/2024
	KEW 6010R			

B. Commissioning Tests

APS Plenum 3 ESP Sub-assembly: 4

Item	Test Conductor	P19 (COLLECTOR) ohm
1	P20 (COLLECTOR)	0.48
2	P21 (COLLECTOR)	0.31
3	P22 (COLLECTOR)	0.36
4	P23 (COLLECTOR)	0.48
5	P24 (COLLECTOR)	0.74
6	P25 (COLLECTOR)	0.95
7	P26 (COLLECTOR)	0.3
8	P27 (COLLECTOR)	0.35
9	P28 (COLLECTOR)	0.27
10	P29 (COLLECTOR)	0.31
11	P30 (COLLECTOR)	0.34
12	P31 (COLLECTOR)	0.34
13	P32 (COLLECTOR)	0.29
14	P33 (COLLECTOR)	0.59
15	P34 (COLLECTOR)	0.35
16	P35 (COLLECTOR)	0.31
17	P36 (COLLECTOR)	0.64

Item	Test Conductor	P37 (COLLECTOR EARTH) ohm
18	P38 (COLLECTOR EARTH)	0.2
19	P39 (COLLECTOR EARTH)	0.22
20	P40 (COLLECTOR EARTH)	0.35
21	P41 (COLLECTOR EARTH)	0.18
22	P42 (COLLECTOR EARTH)	0.2
23	P43 (COLLECTOR EARTH)	0.17
24	P44 (COLLECTOR EARTH)	0.19
25	P45 (COLLECTOR EARTH)	0.18
26	P46 (COLLECTOR EARTH)	0.16
27	P47 (COLLECTOR EARTH)	0.17
28	P48 (COLLECTOR EARTH)	0.18
29	P49 (COLLECTOR EARTH)	0.15
30	P50 (COLLECTOR EARTH)	0.15
31	P51 (COLLECTOR EARTH)	0.18
32	P52 (COLLECTOR EARTH)	0.14
33	P53 (COLLECTOR EARTH)	0.14
34	P54 (COLLECTOR EARTH)	0.17
35	P55 (FRAME)	0.15
36	EARTH	0.13

According to the manufacture's QC report, the resistance of each ESP cell collector or ionizer (from collector/ionizer plate to busbar terminal) should be less than 0.5 ohm, and the APS ESP busbar resistance should be less than or equal to 0.1 ohm. The total passing resistance for ionizer / collector would be the sum of the resistance of two cells (2 cell * 0.5 ohm) and the resistance of the busbar (0.1 ohm). Therefore, the passing criteria of ionizer /collector continuity test is under 1.1 ohm.
The passing criteria between frame plate /collector earth plate and earth is under 0.6 ohm.

C. Comment

Tested / Checked by: (Name of CTA Representative)	Name: Ho Tung	Signature: Ho Tung	Date: 15/07/2025
Witnessed by: (Name of JEC Representative)	Name: John Chan	Signature:	Date: 15/07/2025
Witnessed by: (Name of GCL)	Name: Raymond Lau	Signature:	Date: 15/07/2025
Witnessed by: (Name of AMNTV)	Name: Andy Tang	Signature: Andy Tang	Date: 15/07/2025
Witnessed by: (Name of)	Name:	Signature:	Date:
Witnessed by: (Name of)	Name:	Signature:	Date:

Gammon

CTA INTERNATIONAL AS CLEAN TUNNEL AIR

AIR PURIFICATION SYSTEM (APS)
ESP FILTER ELECTRICAL TEST INSPECTION CHECK FORM

T&C for ESP Filter

Project: Contract No. HY/2019/13 Central Kowloon Route - Buildings, Electrical and Mechanical Works

RISC NO.: 35148A

Date: 15/07/2025

APS Sub-System : ESP Filter System *

Room Name : plenum 3

Sub-assembly : ESP filter

Location: ~~TVB~~/ HVB/ ~~KVB~~

T&C Plan Ref. No.: J3883-TVS-S-06866

Reference drawing: J3883-TVS-D-01839

Electrical Test - Continuity Test

A.Test instruments

Type	Model	Serial No. of Instrument	Calibration Certificated No.	Date of Calibration
Multimeter	~~289C~~ KEW 6010B	E0233986	CSC24885a	15/11/2024

B. Commissioning Tests

APS Plenum 3 ESP Sub-assembly: 5

Item	Test Conductor	P1 (IONIZER) ohm	P2 (IONIZER) ohm	P3 (IONIZER) ohm
1	P4 (IONIZER)	0.4	N.A.	N.A.
2	P5 (IONIZER)	N.A.	0.34	N.A.
3	P6 (IONIZER)	N.A.	N.A.	0.58
4	P7 (IONIZER)	0.71	N.A.	N.A.
5	P8 (IONIZER)	N.A.	0.36	N.A.
6	P9 (IONIZER)	N.A.	N.A.	0.27
7	P10 (IONIZER)	0.44	N.A.	N.A.
8	P11 (IONIZER)	N.A.	0.36	N.A.
9	P12 (IONIZER)	N.A.	N.A.	0.32
10	P13 (IONIZER)	0.35	N.A.	N.A.
11	P14 (IONIZER)	N.A.	0.35	N.A.
12	P15 (IONIZER)	N.A.	N.A.	0.32
13	P16 (IONIZER)	0.36	N.A.	N.A.
14	P17 (IONIZER)	N.A.	0.37	N.A.
15	P18 (IONIZER)	N.A.	N.A.	0.38

According to the manufacture's QC report, the resistance of each ESP cell collector or ionizer (from collector/ionizer plate to busbar terminal) should be less than 0.5 ohm, and the APS ESP busbar resistance should be less than or equal to 0.1 ohm. The total passing resistance for ionizer / collector would be the sum of the resistance of two cells (2 cell * 0.5 ohm) and the resistance of the busbar (0.1 ohm).
Therefore, the passing criteria of ionizer /collector continuity test is under 1.1 ohm.
The passing criteria between frame plate /collector earth plate and earth is under 0.6 ohm.

C. Comment

Tested / Checked by: (Name of CTA Representative)	Name: Ho Tung	Signature: Ho Tung	Date: 15/07/2025
Witnessed by: (Name of JEC Representative)	Name: John Chan	Signature:	Date: 15/07/2025
Witnessed by: (Name of GCL	Name: Raymond Lau	Signature:	Date: 15/07/2025
Witnessed by: (Name of AMMV	Name: Andy Tang	Signature: Andy Tang	Date: 15/07/2025
Witnessed by: (Name of	Name:	Signature:	Date:
Witnessed by: (Name of	Name:	Signature:	Date:

Gammon

CTA INTERNATIONAL AS CLEAN TUNNEL AIR

AIR PURIFICATION SYSTEM (APS)
ESP FILTER ELECTRICAL TEST INSPECTION CHECK FORM

T&C for ESP Filter

Project: Contract No. HY/2019/13 Central Kowloon Route - Buildings, Electrical and Mechanical Works

RISC NO.: 35148A

Date: 15/07/2025

APS Sub-System : ESP Filter System *

Room Name : plenum 3

Sub-assembly : ESP filter

Location: ~~YVB~~ / HVB/ ~~KVB~~ *

T&C Plan Ref. No.: J3883-TVS-S-06866

Reference drawing: J3883-TVS-D-01839

Electrical Test - Continuity Test

A. Test instruments

Type	Model	Serial No. of Instrument	Calibration Certificated No.	Date of Calibration
Multimeter	~~289C~~	E0233486	CSC248859	15/11/2024
	KEW 6010B			

B. Commissioning Tests

APS Plenum 3 ESP Sub-assembly: 5

Item	Test Conductor	P19 (COLLECTOR) ohm
1	P20 (COLLECTOR)	1.01
2	P21 (COLLECTOR)	0.9
3	P22 (COLLECTOR)	0.53
4	P23 (COLLECTOR)	0.46
5	P24 (COLLECTOR)	0.53
6	P25 (COLLECTOR)	0.65
7	P26 (COLLECTOR)	0.59
8	P27 (COLLECTOR)	0.48
9	P28 (COLLECTOR)	0.42
10	P29 (COLLECTOR)	0.45
11	P30 (COLLECTOR)	0.43
12	P31 (COLLECTOR)	0.36
13	P32 (COLLECTOR)	0.47
14	P33 (COLLECTOR)	0.50
15	P34 (COLLECTOR)	0.42
16	P35 (COLLECTOR)	0.45
17	P36 (COLLECTOR)	0.38

Item	Test Conductor	P37 (COLLECTOR EARTH) ohm
18	P38 (COLLECTOR EARTH)	0.39
19	P39 (COLLECTOR EARTH)	0.46
20	P40 (COLLECTOR EARTH)	0.42
21	P41 (COLLECTOR EARTH)	0.32
22	P42 (COLLECTOR EARTH)	0.32
23	P43 (COLLECTOR EARTH)	0.51
24	P44 (COLLECTOR EARTH)	0.32
25	P45 (COLLECTOR EARTH)	0.29
26	P46 (COLLECTOR EARTH)	0.27
27	P47 (COLLECTOR EARTH)	0.26
28	P48 (COLLECTOR EARTH)	0.31
29	P49 (COLLECTOR EARTH)	0.34
30	P50 (COLLECTOR EARTH)	0.51
31	P51 (COLLECTOR EARTH)	0.26
32	P52 (COLLECTOR EARTH)	0.34
33	P53 (COLLECTOR EARTH)	0.25
34	P54 (COLLECTOR EARTH)	0.26
35	P55 (FRAME)	0.24
36	EARTH	0.13

According to the manufacture`s QC report, the resistance of each ESP cell collector or ionizer (from collector/ionizer plate to busbar terminal) should be less than 0.5 ohm, and the APS ESP busbar resistance should be less than or equal to 0.1 ohm. The total passing resistance for ionizer / collector would be the sum of the resistance of two cells (2 cell * 0.5 ohm) and the resistance of the busbar (0.1 ohm). Therefore, the passing criteria of ionizer /collector continuity test is under 1.1 ohm.
The passing criteria between frame plate /collector earth plate and earth is under 0.6 ohm.

C. Comment

Tested / Checked by: (Name of CTA Representative)	Name: Ho Tey	Signature: Ho Tey	Date: 15/07/2025
Witnessed by: (Name of JEC Representative)	Name: John Chan	Signature:	Date: 15/07/2025
Witnessed by: (Name of GCL)	Name: Raymond Lau	Signature:	Date: 15/07/2025
Witnessed by: (Name of AMNV)	Name: Andy Tang	Signature:	Date: 15/07/2025
Witnessed by: (Name of)	Name:	Signature:	Date:
Witnessed by: (Name of)	Name:	Signature:	Date:

Appendix C3 – Site Acceptance Test (SAT) Reports for KVB ESP Filters

Gammon

CTA INTERNATIONAL AS CLEAN TUNNEL AIR

AIR PURIFICATION SYSTEM (APS)
ESP FILTER 1ST FIXING INSPECTION CHECK FORM

T&C for ESP Filter

Project:	Contract No. HY/2019/13 Central Kowloon Route - Buildings, Electrical and Mechanical Works	RISC NO.:	RISC/SI/030992
		Date:	13/01/2025
APS Sub-System :	ESP Filter System *	Room Name :	Plenum 1
Location:	~~YVB / HVB/~~ KVB *		
T&C Plan Ref. No.:	J3883-TVS-S-06866		
Reference drawing:	J3883-TVS-D-01839		

A. ESP Cells Serial No. test form

Sub-assembly : Section 1

Brand Name : CTA

Model No.: CTA ESP

Items	Location		ESP Cell Serial no.
	Column	Row	
1)	1	1	0388002323 010660
2)	1	2	0388002323 010629
3)	1	3	0388002323 010608
4)	1	4	0388002323 010620
5)	1	5	0388002323 010671
6)	1	6	0388002323 010713
7)	2	1	0388002323 010737
8)	2	2	0388002323 010605
9)	2	3	0388002323 010614
10)	2	4	0388002323 120479
11)	2	5	0388002323 010676
12)	2	6	0388002323 010656
13)	3	1	0388002323 010663
14)	3	2	0388002323 010627
15)	3	3	0388002323 010618
16)	3	4	0388002323 010630
17)	3	5	0388002323 010658
18)	3	6	0388002323 010715

B. Comment

Tested / Checked by: (Name of CTA Representative)	Name: Ho Tung	Signature: Robert Ho	Date: 13/01/2025
Witnessed by: (Name of JEC Representative)	Name: John Chan	Signature:	Date: 13/01/2025
Witnessed by: (Name of GCL)	Name: Raymond Lau	Signature:	Date: 13/01/2025
Witnessed by: (Name of AMMTV)	Name: S SHO	Signature:	Date:
Witnessed by: (Name of)	Name:	Signature:	Date:
Witnessed by: (Name of)	Name:	Signature:	Date:

Gammon

CTA INTERNATIONAL AS CLEAN TUNNEL AIR

AIR PURIFICATION SYSTEM (APS)
ESP FILTER 1ST FIXING INSPECTION CHECK FORM

T&C for ESP Filter

Project:	Contract No. HY/2019/13 Central Kowloon Route - Buildings, Electrical and Mechanical Works	RISC NO.:	RISC/SI/030992
		Date:	13/01/2025
APS Sub-System :	ESP Filter System *	Room Name :	Plenum 1
Location:	~~YVB / HVB/~~ KVB *		
T&C Plan Ref. No.:	J3883-TVS-S-06866		
Reference drawing:	J3883-TVS-D-01839		

A. ESP Cells Serial No. test form

Sub-assembly : Section 2

Brand Name : CTA

Model No.: CTA ESP

Items	Location		ESP Cell Serial no.
	Column	Row	
1)	1	1	0388002323 010716
2)	1	2	0388002323 120489
3)	1	3	0388002323 120502
4)	1	4	0388002323 010644
5)	1	5	0388002323 010740
6)	1	6	0388002323 010688
7)	2	1	0388002323 120515
8)	2	2	0388002323 120483
9)	2	3	0388002323 120488
10)	2	4	0388002323 010661
11)	2	5	0388002323 010702
12)	2	6	0388002323 010706
13)	3	1	0388002323 120554
14)	3	2	0388002323 120487
15)	3	3	0388002323 120541
16)	3	4	0388002323 010646
17)	3	5	0388002323 010682
18)	3	6	0388002323 010669

B. Comment

Tested / Checked by: (Name of CTA Representative)	Name: Ho Tung	Signature: Robert Ho	Date: 13/01/2025
Witnessed by: (Name of JEC Representative)	Name: John Chan	Signature:	Date: 13/01/2025
Witnessed by: (Name of GCL)	Name: Raymond Lau	Signature:	Date: 13/01/2025
Witnessed by: (Name of AMMJV)	Name: SSHO	Signature:	Date: 13/1/2025
Witnessed by: (Name of)	Name:	Signature:	Date:
Witnessed by: (Name of)	Name:	Signature:	Date:

Gammon

CTA INTERNATIONAL AS CLEAN TUNNEL AIR

AIR PURIFICATION SYSTEM (APS)
ESP FILTER 1ST FIXING INSPECTION CHECK FORM

T&C for ESP Filter

Project:	Contract No. HY/2019/13 Central Kowloon Route - Buildings, Electrical and Mechanical Works	RISC NO.:	RISC/SI/030992
		Date:	13/01/2025
APS Sub-System :	ESP Filter System *	Room Name :	Plenum 1
Location:	~~YVB / HVB~~/ KVB *		
T&C Plan Ref. No.:	J3883-TVS-S-06866		
Reference drawing:	J3883-TVS-D-01839		

A. ESP Cells Serial No. test form

Sub-assembly : Section 3

Brand Name : CTA

Model No.: CTA ESP

Items	Location		ESP Cell Serial no.
	Column	Row	
1)	1	1	0388002323 010728
2)	1	2	0388002323 120589
3)	1	3	0388002323 010611
4)	1	4	0388002323 010725
5)	1	5	0388002323 010691
6)	1	6	0388002323 010634
7)	2	1	0388002323 120542
8)	2	2	0388002323 010613
9)	2	3	0388002323 010698
10)	2	4	0388002323 010734
11)	2	5	0388002323 120590
12)	2	6	0388002323 010633
13)	3	1	0388002323 120529
14)	3	2	0388002323 120586
15)	3	3	0388002323 010689
16)	3	4	0388002323 010652
17)	3	5	0388002323 120509
18)	3	6	0388002323 120503

B. Comment

Tested / Checked by: (Name of CTA Representative)	Name: Ho Tung	Signature: Robert Ho	Date: 13/01/2025
Witnessed by: (Name of JEC Representative)	Name: John Chan	Signature:	Date: 13/01/2025
Witnessed by: (Name of GCL)	Name: Raymond Lau	Signature:	Date: 13/01/2025
Witnessed by: (Name of AMMJV)	Name: SSHO	Signature:	Date: 13/1/25
Witnessed by: (Name of)	Name:	Signature:	Date:
Witnessed by: (Name of)	Name:	Signature:	Date:

Gammon

CTA INTERNATIONAL AS CLEAN TUNNEL AIR

AIR PURIFICATION SYSTEM (APS)
ESP FILTER 1ST FIXING INSPECTION CHECK FORM

T&C for ESP Filter

Project:	Contract No. HY/2019/13 Central Kowloon Route - Buildings, Electrical and Mechanical Works	RISC NO.:	RISC/SI/030992
		Date:	13/01/2025
APS Sub-System :	ESP Filter System *	Room Name :	Plenum 1
Location:	~~YVB / HVB/~~ KVB *		
T&C Plan Ref. No.:	J3883-TVS-S-06866		
Reference drawing:	J3883-TVS-D-01839		

A. ESP Cells Serial No. test form

Sub-assembly : Section 4

Brand Name : CTA

Model No.: CTA ESP

Items	Location		ESP Cell Serial no.
	Column	Row	
1)	1	1	0388002323 010735
2)	1	2	0388002323 010655
3)	1	3	0388002323 010714
4)	1	4	0388002323 010684
5)	1	5	0388002323 010704
6)	1	6	0388002323 010649
7)	2	1	0388002323 010736
8)	2	2	0388002323 010721
9)	2	3	0388002323 010730
10)	2	4	0388002323 010709
11)	2	5	0388002323 010642
12)	2	6	0388002323 010712
13)	3	1	0388002323 010699
14)	3	2	0388002323 010692
15)	3	3	0388002323 010710
16)	3	4	0388002323 010672
17)	3	5	0388002323 010678
18)	3	6	0388002323 120583

B. Comment

Tested / Checked by: (Name of CTA Representative)	Name: Ho Tung	Signature: Robert Ho	Date: 13/01/2025
Witnessed by: (Name of JEC Representative)	Name: John Chan	Signature:	Date: 13/01/2025
Witnessed by: (Name of GCL)	Name: Raymond Lau	Signature:	Date: 13/01/2025
Witnessed by: (Name of AMMOV)	Name: S S Lo	Signature:	Date: 13/1/2025
Witnessed by: (Name of)	Name:	Signature:	Date:
Witnessed by: (Name of)	Name:	Signature:	Date:

Gammon

CTA INTERNATIONAL AS CLEAN TUNNEL AIR

AIR PURIFICATION SYSTEM (APS)
ESP FILTER 1ST FIXING INSPECTION CHECK FORM

T&C for ESP Filter

Project:	Contract No. HY/2019/13 Central Kowloon Route - Buildings, Electrical and Mechanical Works	RISC NO.:	RISC/SI/030992
		Date:	13/01/2025
APS Sub-System :	ESP Filter System *	Room Name :	Plenum 1
Location:	~~YVB / HVB/~~ KVB *		
T&C Plan Ref. No.:	J3883-TVS-S-06866		
Reference drawing:	J3883-TVS-D-01839		

A. ESP Cells Serial No. test form

Sub-assembly : Section 5

Brand Name : CTA

Model No.: CTA ESP

Items	Location		ESP Cell Serial no.
	Column	Row	
1)	1	1	0388002323 010654
2)	1	2	0388002323 120478
3)	1	3	0388002323 120480
4)	1	4	0388002323 010671
5)	1	5	0388002323 010683
6)	1	6	0388002323 010739
7)	2	1	0388002323 010705
8)	2	2	0388002323 120498
9)	2	3	0388002323 010729
10)	2	4	0388002323 010670
11)	2	5	0388002323 010694
12)	2	6	0388002323 010708
13)	3	1	0388002323 010690
14)	3	2	0388002323 120492
15)	3	3	0388002323 120495
16)	3	4	0388002323 010719
17)	3	5	0388002323 010650
18)	3	6	0388002323 010731

B. Comment

Tested / Checked by: (Name of CTA Representative)	Name: Ho Tung	Signature: Robert Ho	Date: 13/01/2025
Witnessed by: (Name of JEC Representative)	Name: John Chan	Signature:	Date: 13/01/2025
Witnessed by: (Name of GCL)	Name: Raymond Lau	Signature:	Date: 13/01/2025
Witnessed by: (Name of AMMJV)	Name: S SHO	Signature:	Date: 13/1/2025
Witnessed by: (Name of)	Name:	Signature:	Date:
Witnessed by: (Name of)	Name:	Signature:	Date:

Gammon

CTA INTERNATIONAL AS CLEAN TUNNEL AIR

AIR PURIFICATION SYSTEM (APS)
ESP FILTER ELECTRICAL TEST INSPECTION CHECK FORM

T&C for ESP Filter

Project: Contract No. HY/2019/13 Central Kowloon Route - Buildings, Electrical and Mechanical Works

RISC NO.: RISC/SI/030995

Date: 6/2/2025

APS Sub-System : ESP Filter System *

Room Name : Plenum 1

Sub-assembly : ESP Filter

Location: ~~YVB / HVB~~/ KVB *

T&C Plan Ref. No.: J3883-TVS-S-06866

Reference drawing: J3883-TVS-D-01839

Electrical Test - Continuity Test

A.Test instruments

Type	Model	Serial No. of Instrument	Calibration Certificated No.	Date of Calibration
Multimeter	289C	60100020	AQ-SBBH-102	2024-03-20

B. Commissioning Tests

APS Plenum 1 ESP Sub-assembly: 1

Item	Test Conductor	P1 (IONIZER)	P2 (IONIZER)	P3 (IONIZER)
1	P4 (IONIZER)	0.09.	N.A.	N.A.
2	P5 (IONIZER)	N.A.	0.11	N.A.
3	P6 (IONIZER)	N.A.	N.A.	0.22
4	P7 (IONIZER)	0.1	N.A.	N.A.
5	P8 (IONIZER)	N.A.	0.14	N.A.
6	P9 (IONIZER)	N.A.	N.A.	0.34
7	P10 (IONIZER)	0.11	N.A.	N.A.
8	P11 (IONIZER)	N.A.	0.24.	N.A.
9	P12 (IONIZER)	N.A.	N.A.	0.13
10	P13 (IONIZER)	0.11	N.A.	N.A.
11	P14 (IONIZER)	N.A.	0.12.	N.A.
12	P15 (IONIZER)	N.A.	N.A.	0.13
13	P16 (IONIZER)	0.15	N.A.	N.A.
14	P17 (IONIZER)	N.A.	0.14	N.A.
15	P18 (IONIZER)	N.A.	N.A.	0.13

According to the manufacture`s QC report, the resistance of each ESP cell collector or ionizer (from collector/ionizer plate to busbar terminal) should be less than 0.5 ohm, and the APS ESP busbar resistance should be less than or equal to 0.1 ohm. The total passing resistance for ionizer / collector would be the sum of the resistance of two cells (2 cell * 0.5 ohm) and the resistance of the busbar (0.1 ohm).
Therefore, the passing criteria of ionizer /collector continuity test is under 1.1 ohm.
The passing criteria between frame plate /collector earth plate and earth is under 0.6 ohm.

C. Comment

Tested / Checked by: (Name of CTA Representative)	Name: Chase Wong	Signature:	Date: 6/2/25
Witnessed by: (Name of JEC Representative)	Name: John Chan	Signature:	Date: 6/2/25
Witnessed by: (Name of GCL	Name: Raymond Lau	Signature:	Date: 6/2/2025
Witnessed by: (Name of AMMJV	Name: SIU TSZ TUNG (RIOW)	Signature:	Date: 6/2/2025
Witnessed by: (Name of	Name:	Signature:	Date:
Witnessed by: (Name of	Name:	Signature:	Date:

Gammon

CTA INTERNATIONAL AS CLEAN TUNNEL AIR

AIR PURIFICATION SYSTEM (APS)
ESP FILTER ELECTRICAL TEST INSPECTION CHECK FORM

T&C for ESP Filter

Project: Contract No. HY/2019/13 Central Kowloon Route - Buildings, Electrical and Mechanical Works

RISC NO.: RISC/SI/030995

Date: 6/2/2025

APS Sub-System : ESP Filter System *

Room Name : Plenum 1

Sub-assembly : ESP Filter

Location: ~~YVB / HVB~~/ KVB *

T&C Plan Ref. No.: J3883-TVS-S-06866

Reference drawing: J3883-TVS-D-01839

Electrical Test - Continuity Test

A. Test instruments

Type	Model	Serial No. of Instrument	Calibration Certificated No.	Date of Calibration
Multimeter	289C	60100020	AQ-SBBH-102	2024-03-20

B. Commissioning Tests

APS Plenum 1 ESP Sub-assembly: 1

Item	Test Conductor	P19 (COLLECTOR)
1	P20 (COLLECTOR)	0.57
2	P21 (COLLECTOR)	0.25
3	P22 (COLLECTOR)	0.07
4	P23 (COLLECTOR)	0.07
5	P24 (COLLECTOR)	0.17
6	P25 (COLLECTOR)	0.12
7	P26 (COLLECTOR)	0.09
8	P27 (COLLECTOR)	0.09
9	P28 (COLLECTOR)	0.29
10	P29 (COLLECTOR)	0.10
11	P30 (COLLECTOR)	0.10
12	P31 (COLLECTOR)	0.15
13	P32 (COLLECTOR)	0.65
14	P33 (COLLECTOR)	0.11
15	P34 (COLLECTOR)	0.10
16	P35 (COLLECTOR)	0.11
17	P36 (COLLECTOR)	0.27

Item	Test Conductor	P37 (COLLECTOR EARTH)
18	P38 (COLLECTOR EARTH)	0.01
19	P39 (COLLECTOR EARTH)	0.01
20	P40 (COLLECTOR EARTH)	0.01
21	P41 (COLLECTOR EARTH)	0.01
22	P42 (COLLECTOR EARTH)	0.01
23	P43 (COLLECTOR EARTH)	0.02
24	P44 (COLLECTOR EARTH)	0.01
25	P45 (COLLECTOR EARTH)	0.01
26	P46 (COLLECTOR EARTH)	0.02
27	P47 (COLLECTOR EARTH)	0.01
28	P48 (COLLECTOR EARTH)	0.02
29	P49 (COLLECTOR EARTH)	0.02
30	P50 (COLLECTOR EARTH)	0.01
31	P51 (COLLECTOR EARTH)	0.03
32	P52 (COLLECTOR EARTH)	0.03
33	P53 (COLLECTOR EARTH)	0.01
34	P54 (COLLECTOR EARTH)	0.02
35	P55 (FRAME)	0.01
36	EARTH	0.01

According to the manufacture's QC report, the resistance of each ESP cell collector or ionizer (from collector/ionizer plate to busbar terminal) should be less than 0.5 ohm, and the APS ESP busbar resistance should be less than or equal to 0.1 ohm. The total passing resistance for ionizer / collector would be the sum of the resistance of two cells (2 cell * 0.5 ohm) and the resistance of the busbar (0.1 ohm). Therefore, the passing criteria of ionizer /collector continuity test is under 1.1 ohm.
The passing criteria between frame plate /collector earth plate and earth is under 0.6 ohm.

C. Comment

Tested / Checked by: (Name of CTA Representative)	Name: Chase Wong	Signature:	Date: 6/2/25
Witnessed by: (Name of JEC Representative)	Name: John Chen	Signature:	Date: 6/2/25
Witnessed by: (Name of GCL)	Name: Raymond Lau	Signature:	Date: 6/2/2025
Witnessed by: (Name of AMMJV)	Name: SIU TSZ TUNG (RIOW)	Signature:	Date: 6/2/2025
Witnessed by: (Name of)	Name:	Signature:	Date:
Witnessed by: (Name of)	Name:	Signature:	Date:

Gammon

CTA INTERNATIONAL AS CLEAN TUNNEL AIR

AIR PURIFICATION SYSTEM (APS)
ESP FILTER ELECTRICAL TEST INSPECTION CHECK FORM

T&C for ESP Filter

Project: Contract No. HY/2019/13 Central Kowloon Route - Buildings, Electrical and Mechanical Works

RISC NO.: RISC/SI/030995

Date: 6/2/2025

APS Sub-System : ESP Filter System *

Room Name : Plenum 1

Sub-assembly : ESP Filter

Location: ~~YVB / HVB~~/ KVB *

T&C Plan Ref. No.: J3883-TVS-S-06866

Reference drawing: J3883-TVS-D-01839

Electrical Test - Continuity Test

A.Test instruments

Type	Model	Serial No. of Instrument	Calibration Certificated No.	Date of Calibration
Multimeter	289C	60100020	AQ-SBBH-102	2024-03-20

B. Commissioning Tests

APS Plenum ~~1~~ 1 ESP Sub-assembly: 2

Item	Test Conductor	P1 (IONIZER)	P2 (IONIZER)	P3 (IONIZER)
1	P4 (IONIZER)	0.09.	N.A.	N.A.
2	P5 (IONIZER)	N.A.	0.23	N.A.
3	P6 (IONIZER)	N.A.	N.A.	0.11
4	P7 (IONIZER)	0.13	N.A.	N.A.
5	P8 (IONIZER)	N.A.	0.28	N.A.
6	P9 (IONIZER)	N.A.	N.A.	0.11
7	P10 (IONIZER)	0.11	N.A.	N.A.
8	P11 (IONIZER)	N.A.	0.17	N.A.
9	P12 (IONIZER)	N.A.	N.A.	0.23
10	P13 (IONIZER)	0.12	N.A.	N.A.
11	P14 (IONIZER)	N.A.	0.17	N.A.
12	P15 (IONIZER)	N.A.	N.A.	0.12
13	P16 (IONIZER)	0.14	N.A.	N.A.
14	P17 (IONIZER)	N.A.	0.24	N.A.
15	P18 (IONIZER)	N.A.	N.A.	0.17

According to the manufacture`s QC report, the resistance of each ESP cell collector or ionizer (from collector/ionizer plate to busbar terminal) should be less than 0.5 ohm, and the APS ESP busbar resistance should be less than or equal to 0.1 ohm. The total passing resistance for ionizer / collector would be the sum of the resistance of two cells (2 cell * 0.5 ohm) and the resistance of the busbar (0.1 ohm).
Therefore, the passing criteria of ionizer /collector continuity test is under 1.1 ohm.
The passing criteria between frame plate /collector earth plate and earth is under 0.6 ohm.

C. Comment

Tested / Checked by: (Name of CTA Representative)	Name: Chase Wong	Signature:	Date: 6/2/25
Witnessed by: (Name of JEC Representative)	Name: John Chan	Signature:	Date: 6/2/25
Witnessed by: (Name of GCL	Name: Raymond Lau	Signature:	Date: 6/2/2025
Witnessed by: (Name of AMMTJ	Name: SIU TSE TUNG (RIOW)	Signature:	Date: 6/2/2025
Witnessed by: (Name of	Name:	Signature:	Date:
Witnessed by: (Name of	Name:	Signature:	Date:

Gammon

CTA INTERNATIONAL AS CLEAN TUNNEL AIR

AIR PURIFICATION SYSTEM (APS)
ESP FILTER ELECTRICAL TEST INSPECTION CHECK FORM

T&C for ESP Filter

Project: Contract No. HY/2019/13 Central Kowloon Route - Buildings, Electrical and Mechanical Works

RISC NO.: RISC/SI/030995

Date:

APS Sub-System : ESP Filter System *

Room Name : Plenum 1

Sub-assembly : ESP Filter

Location: ~~YVB / HVB~~/ KVB *

T&C Plan Ref. No.: J3883-TVS-S-06866

Reference drawing: J3883-TVS-D-01839

Electrical Test - Continuity Test

A. Test instruments

Type	Model	Serial No. of Instrument	Calibration Certificated No.	Date of Calibration
Multimeter	28ac	60100020	AQ-SBBH-102	2024-03-20

B. Commissioning Tests

APS Plenum 1 ESP Sub-assembly: 2

Item	Test Conductor	P19 (COLLECTOR)
1	P20 (COLLECTOR)	0.07
2	P21 (COLLECTOR)	0.09
3	P22 (COLLECTOR)	0.37
4	P23 (COLLECTOR)	0.14
5	P24 (COLLECTOR)	0.09
6	P25 (COLLECTOR)	0.33
7	P26 (COLLECTOR)	0.12
8	P27 (COLLECTOR)	0.11
9	P28 (COLLECTOR)	0.09
10	P29 (COLLECTOR)	0.23
11	P30 (COLLECTOR)	0.62
12	P31 (COLLECTOR)	0.10
13	P32 (COLLECTOR)	0.27
14	P33 (COLLECTOR)	0.13
15	P34 (COLLECTOR)	0.10
16	P35 (COLLECTOR)	0.19
17	P36 (COLLECTOR)	0.14

Item	Test Conductor	P37 (COLLECTOR EARTH)
18	P38 (COLLECTOR EARTH)	0.01
19	P39 (COLLECTOR EARTH)	0.02
20	P40 (COLLECTOR EARTH)	0.02
21	P41 (COLLECTOR EARTH)	0.01
22	P42 (COLLECTOR EARTH)	0.02
23	P43 (COLLECTOR EARTH)	0.01
24	P44 (COLLECTOR EARTH)	0.01
25	P45 (COLLECTOR EARTH)	0.01
26	P46 (COLLECTOR EARTH)	0.01
27	P47 (COLLECTOR EARTH)	0.01
28	P48 (COLLECTOR EARTH)	0.02
29	P49 (COLLECTOR EARTH)	0.02
30	P50 (COLLECTOR EARTH)	0.01
31	P51 (COLLECTOR EARTH)	0.01
32	P52 (COLLECTOR EARTH)	0.01
33	P53 (COLLECTOR EARTH)	0.01
34	P54 (COLLECTOR EARTH)	0.01
35	P55 (FRAME)	0.01
36	EARTH	0.01

According to the manufacture`s QC report, the resistance of each ESP cell collector or ionizer (from collector/ionizer plate to busbar terminal) should be less than 0.5 ohm, and the APS ESP busbar resistance should be less than or equal to 0.1 ohm. The total passing resistance for ionizer / collector would be the sum of the resistance of two cells (2 cell * 0.5 ohm) and the resistance of the busbar (0.1 ohm). Therefore, the passing criteria of ionizer /collector continuity test is under 1.1 ohm.
The passing criteria between frame plate /collector earth plate and earth is under 0.6 ohm.

C. Comment

Tested / Checked by: (Name of CTA Representative)	Name: Chale Wong	Signature:	Date: 6/2/25
Witnessed by: (Name of JEC Representative)	Name: John Chan	Signature:	Date: 6/2/25
Witnessed by: (Name of GCL)	Name: Raymond Lau	Signature:	Date: 6/2/2025
Witnessed by: (Name of AMMTN)	Name: SIU TSZ TUNG (R IOW)	Signature:	Date: 6/2/2025
Witnessed by: (Name of)	Name:	Signature:	Date:
Witnessed by: (Name of)	Name:	Signature:	Date:

Gammon

CTA INTERNATIONAL AS CLEAN TUNNEL AIR

AIR PURIFICATION SYSTEM (APS)
ESP FILTER ELECTRICAL TEST INSPECTION CHECK FORM

T&C for ESP Filter

Project: Contract No. HY/2019/13 Central Kowloon Route - Buildings, Electrical and Mechanical Works

RISC NO.: RISC/SI/030995

Date: 6/2/2025

APS Sub-System : ESP Filter System *

Room Name : Plenum 1

Sub-assembly : ESP Filter

Location: ~~YVB / HVB~~/ KVB *

T&C Plan Ref. No.: J3883-TVS-S-06866

Reference drawing: J3883-TVS-D-01839

Electrical Test - Continuity Test

A.Test instruments

Type	Model	Serial No. of Instrument	Calibration Certificated No.	Date of Calibration
Multimeter	289C	60100020	AQ-SBBH-102	2024-03-20

B. Commissioning Tests

APS Plenum 1 ESP Sub-assembly: 3

Item	Test Conductor	P1 (IONIZER)	P2 (IONIZER)	P3 (IONIZER)
1	P4 (IONIZER)	0.11	N.A.	N.A.
2	P5 (IONIZER)	N.A.	0.11	N.A.
3	P6 (IONIZER)	N.A.	N.A.	0.09
4	P7 (IONIZER)	0.11	N.A.	N.A.
5	P8 (IONIZER)	N.A.	0.11	N.A.
6	P9 (IONIZER)	N.A.	N.A.	0.10
7	P10 (IONIZER)	0.12	N.A.	N.A.
8	P11 (IONIZER)	N.A.	0.12	N.A.
9	P12 (IONIZER)	N.A.	N.A.	0.10
10	P13 (IONIZER)	0.13	N.A.	N.A.
11	P14 (IONIZER)	N.A.	0.13	N.A.
12	P15 (IONIZER)	N.A.	N.A.	0.11
13	P16 (IONIZER)	0.59.	N.A.	N.A.
14	P17 (IONIZER)	N.A.	0.15	N.A.
15	P18 (IONIZER)	N.A.	N.A.	0.12

According to the manufacture's QC report, the resistance of each ESP cell collector or ionizer (from collector/ionizer plate to busbar terminal) should be less than 0.5 ohm, and the APS ESP busbar resistance should be less than or equal to 0.1 ohm. The total passing resistance for ionizer / collector would be the sum of the resistance of two cells (2 cell * 0.5 ohm) and the resistance of the busbar (0.1 ohm).
Therefore, the passing criteria of ionizer /collector continuity test is under 1.1 ohm.
The passing criteria between frame plate /collector earth plate and earth is under 0.6 ohm.

C. Comment

Tested / Checked by: (Name of CTA Representative)	Name: Chak Wong	Signature:	Date: 6/2/25
Witnessed by: (Name of JEC Representative)	Name: John Chan	Signature:	Date: 6/2/25
Witnessed by: (Name of GCL	Name: Raymond Lau	Signature:	Date: 6/2/2025
Witnessed by: (Name of AMMJV	Name: SIU TSZ TUNG (RIOW)	Signature:	Date: 6/2/2025
Witnessed by: (Name of	Name:	Signature:	Date:
Witnessed by: (Name of	Name:	Signature:	Date:

Gammon

CTA INTERNATIONAL AS CLEAN TUNNEL AIR

AIR PURIFICATION SYSTEM (APS)
ESP FILTER ELECTRICAL TEST INSPECTION CHECK FORM

T&C for ESP Filter

Project: Contract No. HY/2019/13 Central Kowloon Route - Buildings, Electrical and Mechanical Works

RISC NO.: RISC/SI/030995

Date: 6/2/2025

APS Sub-System : ESP Filter System *

Room Name : Plenum 1

Sub-assembly : ESP Filter

Location: ~~YVB / HVB~~/ KVB *

T&C Plan Ref. No.: J3883-TVS-S-06866

Reference drawing: J3883-TVS-D-01839

Electrical Test - Continuity Test

A. Test instruments

Type	Model	Serial No. of Instrument	Calibration Certificated No.	Date of Calibration
Multimeter	28ac	60100020	AQ-SBBH-102	2024-03-20

B. Commissioning Tests

APS Plenum 1 ESP Sub-assembly: 3

Item	Test Conductor	P19 (COLLECTOR)
1	P20 (COLLECTOR)	0.08
2	P21 (COLLECTOR)	L1 ~~0.08~~ 0.37
3	P22 (COLLECTOR)	0.08
4	P23 (COLLECTOR)	0.08
5	P24 (COLLECTOR)	L1 ~~0.33~~ 0.33
6	P25 (COLLECTOR)	0.08
7	P26 (COLLECTOR)	0.09
8	P27 (COLLECTOR)	0.17
9	P28 (COLLECTOR)	0.17
10	P29 (COLLECTOR)	0.18
11	P30 (COLLECTOR)	0.17
12	P31 (COLLECTOR)	0.13
13	P32 (COLLECTOR)	0.38
14	P33 (COLLECTOR)	0.17
15	P34 (COLLECTOR)	0.19
16	P35 (COLLECTOR)	0.12
17	P36 (COLLECTOR)	0.26

Item	Test Conductor	P37 (COLLECTOR EARTH)
18	P38 (COLLECTOR EARTH)	0.01
19	P39 (COLLECTOR EARTH)	0.01
20	P40 (COLLECTOR EARTH)	0.01
21	P41 (COLLECTOR EARTH)	0.01
22	P42 (COLLECTOR EARTH)	0.01
23	P43 (COLLECTOR EARTH)	0.01
24	P44 (COLLECTOR EARTH)	0.01
25	P45 (COLLECTOR EARTH)	0.01
26	P46 (COLLECTOR EARTH)	0.02
27	P47 (COLLECTOR EARTH)	0.01
28	P48 (COLLECTOR EARTH)	0.02
29	P49 (COLLECTOR EARTH)	0.02
30	P50 (COLLECTOR EARTH)	0.01
31	P51 (COLLECTOR EARTH)	0.01
32	P52 (COLLECTOR EARTH)	0.01
33	P53 (COLLECTOR EARTH)	0.02
34	P54 (COLLECTOR EARTH)	0.01
35	P55 (FRAME)	0.01
36	EARTH	0.01

According to the manufacture's QC report, the resistance of each ESP cell collector or ionizer (from collector/ionizer plate to busbar terminal) should be less than 0.5 ohm, and the APS ESP busbar resistance should be less than or equal to 0.1 ohm. The total passing resistance for ionizer / collector would be the sum of the resistance of two cells (2 cell * 0.5 ohm) and the resistance of the busbar (0.1 ohm). Therefore, the passing criteria of ionizer /collector continuity test is under 1.1 ohm.
The passing criteria between frame plate /collector earth plate and earth is under 0.6 ohm.

C. Comment

Tested / Checked by: (Name of CTA Representative)	Name: Chak Wong	Signature:	Date: 6/2/25
Witnessed by: (Name of JEC Representative)	Name: John Chan	Signature:	Date: 6/2/25
Witnessed by: (Name of GCL)	Name: Raymond Lau	Signature:	Date: 6/2/2025
Witnessed by: (Name of AMMTJV)	Name: SIU TSZ TUNG (R10W)	Signature:	Date: 6/2/2025
Witnessed by: (Name of)	Name:	Signature:	Date:
Witnessed by: (Name of)	Name:	Signature:	Date:

Gammon

CTA INTERNATIONAL AS CLEAN TUNNEL AIR

AIR PURIFICATION SYSTEM (APS)
ESP FILTER ELECTRICAL TEST INSPECTION CHECK FORM

T&C for ESP Filter

Project: Contract No. HY/2019/13 Central Kowloon Route - Buildings, Electrical and Mechanical Works

RISC NO.: RISC/SI/030995
Date: 6/2/2025

APS Sub-System : ESP Filter System *
Room Name : Plenum 1
Sub-assembly : ESP Filter
Location: ~~YVB / HVB~~/ KVB *
T&C Plan Ref. No.: J3883-TVS-S-06866
Reference drawing: J3883-TVS-D-01839

Electrical Test - Continuity Test
A.Test instruments

Type	Model	Serial No. of Instrument	Calibration Certificated No.	Date of Calibration
Multimeter	2826	60100020	AQ-SBBH-102	2024-03-20

B. Commissioning Tests

APS Plenum 1 ESP Sub-assembly: 4

Item	Test Conductor	P1 (IONIZER)	P2 (IONIZER)	P3 (IONIZER)
1	P4 (IONIZER)	0.09	N.A.	N.A.
2	P5 (IONIZER)	N.A.	0.57	N.A.
3	P6 (IONIZER)	N.A.	N.A.	0.1
4	P7 (IONIZER)	0.10	N.A.	N.A.
5	P8 (IONIZER)	N.A.	0.57	N.A.
6	P9 (IONIZER)	N.A.	N.A.	0.1
7	P10 (IONIZER)	0.12	N.A.	N.A.
8	P11 (IONIZER)	N.A.	0.59	N.A.
9	P12 (IONIZER)	N.A.	N.A.	0.11
10	P13 (IONIZER)	0.13	N.A.	N.A.
11	P14 (IONIZER)	N.A.	~~0.[illegible]~~ 0.6	N.A.
12	P15 (IONIZER)	N.A.	N.A.	0.81
13	P16 (IONIZER)	0.13	N.A.	N.A.
14	P17 (IONIZER)	N.A.	0.6	N.A.
15	P18 (IONIZER)	N.A.	N.A.	0.23

According to the manufacture's QC report, the resistance of each ESP cell collector or ionizer (from collector/ionizer plate to busbar terminal) should be less than 0.5 ohm, and the APS ESP busbar resistance should be less than or equal to 0.1 ohm. The total passing resistance for ionizer / collector would be the sum of the resistance of two cells (2 cell * 0.5 ohm) and the resistance of the busbar (0.1 ohm).
Therefore, the passing criteria of ionizer /collector continuity test is under 1.1 ohm.
The passing criteria between frame plate /collector earth plate and earth is under 0.6 ohm.

C. Comment

Tested / Checked by: (Name of CTA Representative)	Name: Chak Wong	Signature:	Date: 6/2/25
Witnessed by: (Name of JEC Representative)	Name: John Chan	Signature:	Date: 6/2/25
Witnessed by: (Name of GCL	Name: Raymond Lau	Signature:	Date: 6/2/2025
Witnessed by: (Name of AMMTN	Name: SIU TSZ TUNG (RIOW)	Signature:	Date: 6/2/2025
Witnessed by: (Name of	Name:	Signature:	Date:
Witnessed by: (Name of	Name:	Signature:	Date:

Gammon

CTA INTERNATIONAL AS CLEAN TUNNEL AIR

AIR PURIFICATION SYSTEM (APS)
ESP FILTER ELECTRICAL TEST INSPECTION CHECK FORM

T&C for ESP Filter

Project: Contract No. HY/2019/13 Central Kowloon Route - Buildings, Electrical and Mechanical Works

RISC NO.: RISC/SI/030995

Date: 6/2/2025

APS Sub-System : ESP Filter System *

Room Name : Plenum 1

Sub-assembly : ESP Filter

Location: ~~YVB / HVB~~/ KVB *

T&C Plan Ref. No.: J3883-TVS-S-06866

Reference drawing: J3883-TVS-D-01839

Electrical Test - Continuity Test

A. Test instruments

Type	Model	Serial No. of Instrument	Calibration Certificated No.	Date of Calibration
Multimeter	289C	60100020	AQ-SBBH-102	2024-03-20

B. Commissioning Tests

APS Plenum 1 ESP Sub-assembly: 4

Item	Test Conductor	P19 (COLLECTOR)
1	P20 (COLLECTOR)	0.07
2	P21 (COLLECTOR)	0.09
3	P22 (COLLECTOR)	0.49
4	P23 (COLLECTOR)	0.93
5	P24 (COLLECTOR)	0.09
6	P25 (COLLECTOR)	0.18
7	P26 (COLLECTOR)	0.09
8	P27 (COLLECTOR)	0.10
9	P28 (COLLECTOR)	0.47
10	P29 (COLLECTOR)	0.18
11	P30 (COLLECTOR)	0.10
12	P31 (COLLECTOR)	0.10
13	P32 (COLLECTOR)	0.77
14	P33 (COLLECTOR)	0.63
15	P34 (COLLECTOR)	0.35
16	P35 (COLLECTOR)	0.15
17	P36 (COLLECTOR)	0.14

Item	Test Conductor	P37 (COLLECTOR EARTH)
18	P38 (COLLECTOR EARTH)	0.02
19	P39 (COLLECTOR EARTH)	0.02
20	P40 (COLLECTOR EARTH)	0.02
21	P41 (COLLECTOR EARTH)	0.01
22	P42 (COLLECTOR EARTH)	0.01
23	P43 (COLLECTOR EARTH)	0.02
24	P44 (COLLECTOR EARTH)	0.02
25	P45 (COLLECTOR EARTH)	0.02
26	P46 (COLLECTOR EARTH)	0.02
27	P47 (COLLECTOR EARTH)	0.02
28	P48 (COLLECTOR EARTH)	0.03
29	P49 (COLLECTOR EARTH)	0.03
30	P50 (COLLECTOR EARTH)	0.03
31	P51 (COLLECTOR EARTH)	0.03
32	P52 (COLLECTOR EARTH)	0.02
33	P53 (COLLECTOR EARTH)	0.03
34	P54 (COLLECTOR EARTH)	0.05
35	P55 (FRAME)	0.02
36	EARTH	0.01

According to the manufacture`s QC report, the resistance of each ESP cell collector or ionizer (from collector/ionizer plate to busbar terminal) should be less than 0.5 ohm, and the APS ESP busbar resistance should be less than or equal to 0.1 ohm. The total passing resistance for ionizer / collector would be the sum of the resistance of two cells (2 cell * 0.5 ohm) and the resistance of the busbar (0.1 ohm). Therefore, the passing criteria of ionizer /collector continuity test is under 1.1 ohm.
The passing criteria between frame plate /collector earth plate and earth is under 0.6 ohm.

C. Comment

Tested / Checked by: (Name of CTA Representative)	Name: Chase Wong	Signature:	Date: 6/2/25
Witnessed by: (Name of JEC Representative)	Name: John Chan	Signature:	Date: 6/2/25
Witnessed by: (Name of GCL)	Name: Raymond Lau	Signature:	Date: 6/2/2025
Witnessed by: (Name of AMMJV)	Name: SIU TSZ TUNG (RIOW)	Signature:	Date: 6/2/2025
Witnessed by: (Name of)	Name:	Signature:	Date:
Witnessed by: (Name of)	Name:	Signature:	Date:

Gammon

CTA INTERNATIONAL AS CLEAN TUNNEL AIR

T&C for ESP Filter

AIR PURIFICATION SYSTEM (APS)
ESP FILTER ELECTRICAL TEST INSPECTION CHECK FORM

Project: Contract No. HY/2019/13 Central Kowloon Route - Buildings, Electrical and Mechanical Works

RISC NO.: RISC/SI/030995
Date: 6/2/2025

APS Sub-System : ESP Filter System *
Room Name : Plenum 1
Sub-assembly : ESP Filter
Location: ~~YVB / HVB~~/ KVB *
T&C Plan Ref. No.: J3883-TVS-S-06866
Reference drawing: J3883-TVS-D-01839

Electrical Test - Continuity Test
A.Test instruments

Type	Model	Serial No. of Instrument	Calibration Certificated No.	Date of Calibration
Multimeter	289C	60100020	AQ-SBBH-102	2024-03-20

B. Commissioning Tests

APS Plenum 1 ESP Sub-assembly: 5

Item	Test Conductor	P1 (IONIZER)	P2 (IONIZER)	P3 (IONIZER)
1	P4 (IONIZER)	0.10	N.A.	N.A.
2	P5 (IONIZER)	N.A.	0.12	N.A.
3	P6 (IONIZER)	N.A.	N.A.	0.11
4	P7 (IONIZER)	0.12	N.A.	N.A.
5	P8 (IONIZER)	N.A.	0.12	N.A.
6	P9 (IONIZER)	N.A.	N.A.	0.18
7	P10 (IONIZER)	0.16	N.A.	N.A.
8	P11 (IONIZER)	N.A.	0.13	N.A.
9	P12 (IONIZER)	N.A.	N.A.	0.14
10	P13 (IONIZER)	0.13	N.A.	N.A.
11	P14 (IONIZER)	N.A.	0.15	N.A.
12	P15 (IONIZER)	N.A.	N.A.	0.64
13	P16 (IONIZER)	0.22	N.A.	N.A.
14	P17 (IONIZER)	N.A.	0.35	N.A.
15	P18 (IONIZER)	N.A.	N.A.	0.23

According to the manufacture's QC report, the resistance of each ESP cell collector or ionizer (from collector/ionizer plate to busbar terminal) should be less than 0.5 ohm, and the APS ESP busbar resistance should be less than or equal to 0.1 ohm. The total passing resistance for ionizer / collector would be the sum of the resistance of two cells (2 cell * 0.5 ohm) and the resistance of the busbar (0.1 ohm).
Therefore, the passing criteria of ionizer /collector continuity test is under 1.1 ohm.
The passing criteria between frame plate /collector earth plate and earth is under 0.6 ohm.

C. Comment

Tested / Checked by: (Name of CTA Representative)	Name: Chase Wong	Signature:	Date: 6/2/25
Witnessed by: (Name of JEC Representative)	Name: John Chan	Signature:	Date: 6/2/25
Witnessed by: (Name of GCL	Name: Raymond Lau	Signature:	Date: 6/2/2025
Witnessed by: (Name of AMMJV	Name: SIU TSZ TUNG (RIOW)	Signature:	Date: 6/2/2025
Witnessed by: (Name of	Name:	Signature:	Date:
Witnessed by: (Name of	Name:	Signature:	Date:

-0.07

Gammon

CTA INTERNATIONAL AS CLEAN TUNNEL AIR

AIR PURIFICATION SYSTEM (APS)
ESP FILTER ELECTRICAL TEST INSPECTION CHECK FORM

T&C for ESP Filter

Project: Contract No. HY/2019/13 Central Kowloon Route - Buildings, Electrical and Mechanical Works

RISC NO.: RISC/SI/030995

Date: 6/2/2025

APS Sub-System : ESP Filter System *

Room Name : Plenum 1

Sub-assembly : ESP Filter

Location: ~~YVB / HVB~~/ KVB *

T&C Plan Ref. No.: J3883-TVS-S-06866

Reference drawing: J3883-TVS-D-01839

Electrical Test - Continuity Test

A. Test instruments

Type	Model	Serial No. of Instrument	Calibration Certificated No.	Date of Calibration
Multimeter	289C	60100020	AQ-SBBH-102	2024-03-20

B. Commissioning Tests

APS Plenum 1 ESP Sub-assembly: 5

Item	Test Conductor	P19 (COLLECTOR)
1	P20 (COLLECTOR)	0.23
2	P21 (COLLECTOR)	0.17
3	P22 (COLLECTOR)	0.13
4	P23 (COLLECTOR)	0.35
5	P24 (COLLECTOR)	0.45
6	P25 (COLLECTOR)	0.13
7	P26 (COLLECTOR)	0.17
8	P27 (COLLECTOR)	0.17
9	P28 (COLLECTOR)	0.19
10	P29 (COLLECTOR)	0.22
11	P30 (COLLECTOR)	0.23
12	P31 (COLLECTOR)	0.22
13	P32 (COLLECTOR)	0.13
14	P33 (COLLECTOR)	0.57
15	P34 (COLLECTOR)	0.16
16	P35 (COLLECTOR)	0.53
17	P36 (COLLECTOR)	0.28

Item	Test Conductor	P37 (COLLECTOR EARTH)
18	P38 (COLLECTOR EARTH)	0.01
19	P39 (COLLECTOR EARTH)	0.01
20	P40 (COLLECTOR EARTH)	0.01
21	P41 (COLLECTOR EARTH)	0.01
22	P42 (COLLECTOR EARTH)	0.02
23	P43 (COLLECTOR EARTH)	0.02
24	P44 (COLLECTOR EARTH)	0.01
25	P45 (COLLECTOR EARTH)	0.01
26	P46 (COLLECTOR EARTH)	0.01
27	P47 (COLLECTOR EARTH)	0.01
28	P48 (COLLECTOR EARTH)	0.02
29	P49 (COLLECTOR EARTH)	0.01
30	P50 (COLLECTOR EARTH)	0.01
31	P51 (COLLECTOR EARTH)	0.02
32	P52 (COLLECTOR EARTH)	0.02
33	P53 (COLLECTOR EARTH)	0.03
34	P54 (COLLECTOR EARTH)	0.02
35	P55 (FRAME)	0.01
36	EARTH	~~0.00~~ 0.01

According to the manufacture's QC report, the resistance of each ESP cell collector or ionizer (from collector/ionizer plate to busbar terminal) should be less than 0.5 ohm, and the APS ESP busbar resistance should be less than or equal to 0.1 ohm. The total passing resistance for ionizer / collector would be the sum of the resistance of two cells (2 cell * 0.5 ohm) and the resistance of the busbar (0.1 ohm). Therefore, the passing criteria of ionizer /collector continuity test is under 1.1 ohm.
The passing criteria between frame plate /collector earth plate and earth is under 0.6 ohm.

C. Comment

Tested / Checked by: (Name of CTA Representative)	Name: Chow Wong	Signature:	Date: 6/2/25
Witnessed by: (Name of JEC Representative)	Name: John Chan	Signature:	Date: 6/2/25
Witnessed by: (Name of GCL)	Name: Raymond Lau	Signature:	Date: 6/2/2025
Witnessed by: (Name of AMMJV)	Name: SIU TSZ TUNG (RIOW)	Signature:	Date: 6/2/2025
Witnessed by: (Name of)	Name:	Signature:	Date:
Witnessed by: (Name of)	Name:	Signature:	Date:

Gammon

CTA INTERNATIONAL AS CLEAN TUNNEL AIR

T&C for ESP Filter

AIR PURIFICATION SYSTEM (APS)
ESP FILTER ELECTRICAL TEST INSPECTION CHECK FORM

Project: Contract No. HY/2019/13 Central Kowloon Route - Buildings, Electrical and Mechanical Works

RISC NO.: RISC/SI/030996

Date: 24/01/2025

APS Sub-System : ESP Filter System *

Room Name : Plenum 2

Sub-assembly : 01 ESP filter

Location: YVB / HVB/ ~~KVB~~

T&C Plan Ref. No.: J3883-TVS-S-06866

Reference drawing: J3883-TVS-D-01839

Electrical Test - Continuity Test

A.Test instruments

Type	Model	Serial No. of Instrument	Calibration Certificated No.	Date of Calibration
MULTIMETER	289C	60100020	AQ-SBH-102	2024-03-20

B. Commissioning Tests

APS Plenum 2 ESP Sub-assembly: 01

Item	Test Conductor	P1 (IONIZER)	P2 (IONIZER)	P3 (IONIZER)
1	P4 (IONIZER)	0.74	N.A.	N.A.
2	P5 (IONIZER)	N.A.	0.19	N.A.
3	P6 (IONIZER)	N.A.	N.A.	0.21
4	P7 (IONIZER)	0.44	N.A.	N.A.
5	P8 (IONIZER)	N.A.	0.20	N.A.
6	P9 (IONIZER)	N.A.	N.A.	0.17
7	P10 (IONIZER)	0.55	N.A.	N.A.
8	P11 (IONIZER)	N.A.	0.20	N.A.
9	P12 (IONIZER)	N.A.	N.A.	0.17
10	P13 (IONIZER)	0.46	N.A.	N.A.
11	P14 (IONIZER)	N.A.	0.21	N.A.
12	P15 (IONIZER)	N.A.	N.A.	0.29
13	P16 (IONIZER)	0.47	N.A.	N.A.
14	P17 (IONIZER)	N.A.	0.21	N.A.
15	P18 (IONIZER)	N.A.	N.A.	0.20

According to the manufacture's QC report, the resistance of each ESP cell collector or ionizer (from collector/ionizer plate to busbar terminal) should be less than 0.5 ohm, and the APS ESP busbar resistance should be less than or equal to 0.1 ohm. The total passing resistance for ionizer / collector would be the sum of the resistance of two cells (2 cell * 0.5 ohm) and the resistance of the busbar (0.1 ohm).
Therefore, the passing criteria of ionizer /collector continuity test is under 1.1 ohm.
The passing criteria between frame plate /collector earth plate and earth is under 0.6 ohm.

C. Comment

Tested / Checked by: (Name of CTA Representative)	Name: Ho Tung	Signature:	Date: 24/01/2025
Witnessed by: (Name of JEC Representative)	Name: Tony Ho	Signature:	Date: 24/01/2025
Witnessed by: (Name of GCL)	Name: Raymond Lau	Signature:	Date: 24/01/2025
Witnessed by: (Name of AMMJV)	Name: SIU TSZ TUNG (RIOW)	Signature:	Date: 24/1/2025
Witnessed by: (Name of	Name:	Signature:	Date:
Witnessed by: (Name of	Name:	Signature:	Date:

Gammon

CTA INTERNATIONAL AS CLEAN TUNNEL AIR

AIR PURIFICATION SYSTEM (APS)
ESP FILTER ELECTRICAL TEST INSPECTION CHECK FORM

T&C for ESP Filter

Project: Contract No. HY/2019/13 Central Kowloon Route - Buildings, Electrical and Mechanical Works

RISC NO.: RISC/SI/030996

Date: 24/01/2025

APS Sub-System : ESP Filter System *

Room Name : Plenum 2

Sub-assembly : 01 ESP filter

Location: YVB / HVB / KVB*

T&C Plan Ref. No.: J3883-TVS-S-06866

Reference drawing:

Electrical Test - Continuity Test

A. Test instruments

Type	Model	Serial No. of Instrument	Calibration Certificated No.	Date of Calibration
MULTIMETER	28PC	60100020	AQ-SBBH-102	2024/07/20

B. Commissioning Tests

APS Plenum 2 ESP Sub-assembly: 01

Item	Test Conductor	P19 (COLLECTOR)
1	P20 (COLLECTOR)	0.13
2	P21 (COLLECTOR)	0.15
3	P22 (COLLECTOR)	0.20
4	P23 (COLLECTOR)	0.14
5	P24 (COLLECTOR)	0.15
6	P25 (COLLECTOR)	0.14
7	P26 (COLLECTOR)	0.15
8	P27 (COLLECTOR)	0.20
9	P28 (COLLECTOR)	0.21
10	P29 (COLLECTOR)	0.16
11	P30 (COLLECTOR)	0.19
12	P31 (COLLECTOR)	0.16
13	P32 (COLLECTOR)	0.16
14	P33 (COLLECTOR)	0.17
15	P34 (COLLECTOR)	0.17
16	P35 (COLLECTOR)	0.18
17	P36 (COLLECTOR)	0.22

Item	Test Conductor	P37 (COLLECTOR EARTH)
18	P38 (COLLECTOR EARTH)	0.07
19	P39 (COLLECTOR EARTH)	0.07
20	P40 (COLLECTOR EARTH)	0.07
21	P41 (COLLECTOR EARTH)	0.07
22	P42 (COLLECTOR EARTH)	0.07
23	P43 (COLLECTOR EARTH)	0.08
24	P44 (COLLECTOR EARTH)	0.07
25	P45 (COLLECTOR EARTH)	0.07
26	P46 (COLLECTOR EARTH)	0.08
27	P47 (COLLECTOR EARTH)	0.07
28	P48 (COLLECTOR EARTH)	0.07
29	P49 (COLLECTOR EARTH)	0.07
30	P50 (COLLECTOR EARTH)	0.07
31	P51 (COLLECTOR EARTH)	0.07
32	P52 (COLLECTOR EARTH)	0.08
33	P53 (COLLECTOR EARTH)	0.08
34	P54 (COLLECTOR EARTH)	0.08
35	P55 (FRAME)	0.08
36	EARTH	0.07

According to the manufacture's QC report, the resistance of each ESP cell collector or ionizer (from collector/ionizer plate to busbar terminal) should be less than 0.5 ohm, and the APS ESP busbar resistance should be less than or equal to 0.1 ohm. The total passing resistance for ionizer / collector would be the sum of the resistance of two cells (2 cell × 0.5 ohm) and the resistance of the busbar (0.1 ohm). Therefore, the passing criteria of ionizer /collector continuity test is under 1.1 ohm.
The passing criteria between frame plate /collector earth plate and earth is under 0.6 ohm.

C. Comment

Tested / Checked by: (Name of CTA Representative)	Name: Ho Tung	Signature:	Date: 24/01/2025
Witnessed by: (Name of JEC Representative)	Name: TONY HO	Signature:	Date: 24/01/2025
Witnessed by: (Name of GCL)	Name: Raymond Law	Signature:	Date: 24/01/2025
Witnessed by: (Name of AMMJV)	Name: SIU TSZ TUNG (RIOW)	Signature:	Date: 24/1/2025
Witnessed by: (Name of)	Name:	Signature:	Date:
Witnessed by: (Name of)	Name:	Signature:	Date:

Gammon

CTA INTERNATIONAL AS

T&C for ESP Filter

AIR PURIFICATION SYSTEM (APS)
ESP FILTER ELECTRICAL TEST INSPECTION CHECK FORM

Project: Contract No. HY/2019/13 Central Kowloon Route - Buildings, Electrical and Mechanical Works

RISC NO.: RISC/SI/030946

Date: 24/01/2025

APS Sub-System : ESP Filter System *

Room Name : Plenum 2

Sub-assembly : 02 ESP filter

Location: YVB / HVB / KVB *

T&C Plan Ref. No.: 5383-TVS-S-06866

Reference drawing:

Electrical Test - Continuity Test

A.Test instruments

Type	Model	Serial No. of Instrument	Calibration Certificated No.	Date of Calibration
MULTI METER	28PC	60100020	AQ-SBB4-102	2024/03/20

B. Commissioning Tests

APS Plenum 2 ESP Sub-assembly: 02

Item	Test Conductor	P1 (IONIZER)	P2 (IONIZER)	P3 (IONIZER)
1	P4 (IONIZER)	0.27	N.A.	N.A.
2	P5 (IONIZER)	N.A.	0.55	N.A.
3	P6 (IONIZER)	N.A.	N.A.	0.21
4	P7 (IONIZER)	0.24	N.A.	N.A.
5	P8 (IONIZER)	N.A.	0.18	N.A.
6	P9 (IONIZER)	N.A.	N.A.	0.16
7	P10 (IONIZER)	0.26	N.A.	N.A.
8	P11 (IONIZER)	N.A.	0.19	N.A.
9	P12 (IONIZER)	N.A.	N.A.	0.18
10	P13 (IONIZER)	0.27	N.A.	N.A.
11	P14 (IONIZER)	N.A.	0.21	N.A.
12	P15 (IONIZER)	N.A.	N.A.	0.17
13	P16 (IONIZER)	0.30	N.A.	N.A.
14	P17 (IONIZER)	N.A.	0.23	N.A.
15	P18 (IONIZER)	N.A.	N.A.	0.25

According to the manufacture's QC report, the resistance of each ESP cell collector or ionizer (from collector/ionizer plate to busbar terminal) should be less than 0.5 ohm, and the APS ESP busbar resistance should be less than or equal to 0.1 ohm. The total passing resistance for ionizer / collector would be the sum of the resistance of two cells (2 cell * 0.5 ohm) and the resistance of the busbar (0.1 ohm).
Therefore, the passing criteria of ionizer /collector continuity test is under 1.1 ohm.
The passing criteria between frame plate /collector earth plate and earth is under 0.6 ohm.

C. Comment

Tested / Checked by: (Name of CTA Representative)	Name: H. Tung	Signature:	Date: 24/01/2025
Witnessed by: (Name of JEC Representative)	Name: Tony Ho	Signature:	Date: 24/01/2025
Witnessed by: (Name of GCL	Name: Raymond Lau	Signature:	Date: 24/01/2025
Witnessed by: (Name of AMMJV	Name: SIU TSZ TUNG (RIOW)	Signature:	Date: 24/1/2025
Witnessed by: (Name of	Name:	Signature:	Date:
Witnessed by: (Name of	Name:	Signature:	Date:

Gammon

CTA INTERNATIONAL AS CLEAN TUNNEL AIR

T&C for ESP Filter

AIR PURIFICATION SYSTEM (APS)
ESP FILTER ELECTRICAL TEST INSPECTION CHECK FORM

Project: Contract No. HY/2019/13 Central Kowloon Route - Buildings, Electrical and Mechanical Works

RISC NO.: RISC/SI/030926

Date: 24/01/2025

APS Sub-System : ESP Filter System *

Room Name : Plenum 2

Sub-assembly : 02 ESP filter

Location: YVB / HVB/ KVB*

T&C Plan Ref. No.: J3881-TVS-S-06866

Reference drawing:

Electrical Test - Continuity Test

A. Test instruments

Type	Model	Serial No. of Instrument	Calibration Certificated No.	Date of Calibration
MULTIMETER	289C	60100020	AQ-SBBH-102	2024/03/28

B. Commissioning Tests

APS Plenum 2 ESP Sub-assembly: 02

Item	Test Conductor	P19 (COLLECTOR)
1	P20 (COLLECTOR)	0.44
2	P21 (COLLECTOR)	0.22
3	P22 (COLLECTOR)	0.23
4	P23 (COLLECTOR)	0.16
5	P24 (COLLECTOR)	0.23
6	P25 (COLLECTOR)	0.16
7	P26 (COLLECTOR)	0.16
8	P27 (COLLECTOR)	0.17
9	P28 (COLLECTOR)	0.17
10	P29 (COLLECTOR)	0.19
11	P30 (COLLECTOR)	0.21
12	P31 (COLLECTOR)	0.20
13	P32 (COLLECTOR)	0.39
14	P33 (COLLECTOR)	0.30
15	P34 (COLLECTOR)	0.26
16	P35 (COLLECTOR)	0.23
17	P36 (COLLECTOR)	0.20

Item	Test Conductor	P37 (COLLECTOR EARTH)
18	P38 (COLLECTOR EARTH)	0.08
19	P39 (COLLECTOR EARTH)	0.08
20	P40 (COLLECTOR EARTH)	0.08
21	P41 (COLLECTOR EARTH)	0.08
22	P42 (COLLECTOR EARTH)	0.07
23	P43 (COLLECTOR EARTH)	0.07
24	P44 (COLLECTOR EARTH)	0.08
25	P45 (COLLECTOR EARTH)	0.07
26	P46 (COLLECTOR EARTH)	0.08
27	P47 (COLLECTOR EARTH)	0.08
28	P48 (COLLECTOR EARTH)	0.08
29	P49 (COLLECTOR EARTH)	0.08
30	P50 (COLLECTOR EARTH)	0.08
31	P51 (COLLECTOR EARTH)	0.08
32	P52 (COLLECTOR EARTH)	0.08
33	P53 (COLLECTOR EARTH)	0.08
34	P54 (COLLECTOR EARTH)	0.08
35	P55 (FRAME)	0.07
36	EARTH	0.07

According to the manufacture`s QC report, the resistance of each ESP cell collector or ionizer (from collector/ionizer plate to busbar terminal) should be less than 0.5 ohm, and the APS ESP busbar resistance should be less than or equal to 0.1 ohm. The total passing resistance for ionizer / collector would be the sum of the resistance of two cells (2 cell * 0.5 ohm) and the resistance of the busbar (0.1 ohm). Therefore, the passing criteria of ionizer /collector continuity test is under 1.1 ohm.
The passing criteria between frame plate /collector earth plate and earth is under 0.6 ohm.

C. Comment

Tested / Checked by: (Name of CTA Representative)	Name: Ho Tung	Signature:	Date: 24/01/2025
Witnessed by: (Name of JEC Representative)	Name: Tony Ho	Signature:	Date: 24/01/2025
Witnessed by: (Name of GCL)	Name: Raymond Lau	Signature:	Date: 24/01/2025
Witnessed by: (Name of AMMJV)	Name: SIU TSZ TUNG (RIOW)	Signature:	Date: 24/1/2025
Witnessed by: (Name of)	Name:	Signature:	Date:
Witnessed by: (Name of)	Name:	Signature:	Date:

Gammon

CTA INTERNATIONAL AS CLEAN TUNNEL AIR

T&C for ESP Filter

AIR PURIFICATION SYSTEM (APS)
ESP FILTER ELECTRICAL TEST INSPECTION CHECK FORM

Project: Contract No. HY/2019/13 Central Kowloon Route - Buildings, Electrical and Mechanical Works

RISC NO.: RISC/SI/030996

Date: 24/01/2025

APS Sub-System : ESP Filter System *

Room Name : Plenum 2

Sub-assembly : 03 ESP filter

Location: YVB / HVB / ~~KVB~~ *

T&C Plan Ref. No.: 13887-TVS-S-06866

Reference drawing:

Electrical Test - Continuity Test

A.Test instruments

Type	Model	Serial No. of Instrument	Calibration Certificated No.	Date of Calibration
MULTIMETER	289C	60100020	AQ-SBM-132	2024/07/20

B. Commissioning Tests

APS Plenum 2 ESP Sub-assembly: 03

Item	Test Conductor	P1 (IONIZER)	P2 (IONIZER)	P3 (IONIZER)
1	P4 (IONIZER)	0.3	N.A.	N.A.
2	P5 (IONIZER)	N.A.	0.34	N.A.
3	P6 (IONIZER)	N.A.	N.A.	0.17
4	P7 (IONIZER)	0.3	N.A.	N.A.
5	P8 (IONIZER)	N.A.	0.36	N.A.
6	P9 (IONIZER)	N.A.	N.A.	0.17
7	P10 (IONIZER)	0.23	N.A.	N.A.
8	P11 (IONIZER)	N.A.	0.35	N.A.
9	P12 (IONIZER)	N.A.	N.A.	0.19
10	P13 (IONIZER)	0.24	N.A.	N.A.
11	P14 (IONIZER)	N.A.	0.37	N.A.
12	P15 (IONIZER)	N.A.	N.A.	0.19
13	P16 (IONIZER)	0.24	N.A.	N.A.
14	P17 (IONIZER)	N.A.	0.37	N.A.
15	P18 (IONIZER)	N.A.	N.A.	0.34

According to the manufacture's QC report, the resistance of each ESP cell collector or ionizer (from collector/ionizer plate to busbar terminal) should be less than 0.5 ohm., and the APS ESP busbar resistance should be less than or equal to 0.1 ohm. The total passing resistance for ionizer / collector would be the sum of the resistance of two cells (2 cell * 0.5 ohm) and the resistance of the busbar (0.1 ohm).
Therefore, the passing criteria of ionizer /collector continuity test is under 1.1 ohm.
The passing criteria between frame plate /collector earth plate and earth is under 0.6 ohm.

C. Comment

Tested / Checked by: (Name of CTA Representative)	Name: Ho Tuy	Signature:	Date: 24/01/2025
Witnessed by: (Name of JEC Representative)	Name: Tony Ho	Signature:	Date: 24/01/2025
Witnessed by: (Name of GCL	Name: Raymond Lau	Signature:	Date: 24/01/2025
Witnessed by: (Name of AMMJV	Name: SIU TSZ TUNG (RIOW)	Signature:	Date: 24/1/2025
Witnessed by: (Name of	Name:	Signature:	Date:
Witnessed by: (Name of	Name:	Signature:	Date:

Gammon

CTA INTERNATIONAL AS CLEAN TUNNEL AIR

AIR PURIFICATION SYSTEM (APS)
ESP FILTER ELECTRICAL TEST INSPECTION CHECK FORM

T&C for ESP Filter

Project: Contract No. HY/2019/13 Central Kowloon Route - Buildings, Electrical and Mechanical Works

RISC NO.: RISC/SI/030996

Date: 24/01/2025

APS Sub-System : ESP Filter System *

Room Name : Plenum 2

Sub-assembly : 03 ESP filter

Location: YVB / HVB/ RVB *

T&C Plan Ref. No.: J3883-TVS-S-06866

Reference drawing:

Electrical Test - Continuity Test

A. Test instruments

Type	Model	Serial No. of Instrument	Calibration Certificated No.	Date of Calibration
MULTIMETER	287C	60100020	AQ-SBBH-102	2024/03/20

B. Commissioning Tests

APS Plenum 2 ESP Sub-assembly: 03

Item	Test Conductor	P19 (COLLECTOR)
1	P20 (COLLECTOR)	0.13
2	P21 (COLLECTOR)	0.25
3	P22 (COLLECTOR)	0.21
4	P23 (COLLECTOR)	0.24
5	P24 (COLLECTOR)	0.19
6	P25 (COLLECTOR)	0.13
7	P26 (COLLECTOR)	0.17
8	P27 (COLLECTOR)	0.16
9	P28 (COLLECTOR)	0.16
10	P29 (COLLECTOR)	0.16
11	P30 (COLLECTOR)	0.18
12	P31 (COLLECTOR)	0.15
13	P32 (COLLECTOR)	0.17
14	P33 (COLLECTOR)	0.19
15	P34 (COLLECTOR)	0.21
16	P35 (COLLECTOR)	0.24
17	P36 (COLLECTOR)	0.20

Item	Test Conductor	P37 (COLLECTOR EARTH)
18	P38 (COLLECTOR EARTH)	0.08
19	P39 (COLLECTOR EARTH)	0.08
20	P40 (COLLECTOR EARTH)	0.07
21	P41 (COLLECTOR EARTH)	0.08
22	P42 (COLLECTOR EARTH)	0.08
23	P43 (COLLECTOR EARTH)	0.08
24	P44 (COLLECTOR EARTH)	0.08
25	P45 (COLLECTOR EARTH)	0.08
26	P46 (COLLECTOR EARTH)	0.07
27	P47 (COLLECTOR EARTH)	0.08
28	P48 (COLLECTOR EARTH)	0.08
29	P49 (COLLECTOR EARTH)	0.08
30	P50 (COLLECTOR EARTH)	0.08
31	P51 (COLLECTOR EARTH)	0.08
32	P52 (COLLECTOR EARTH)	0.08
33	P53 (COLLECTOR EARTH)	0.08
34	P54 (COLLECTOR EARTH)	0.09
35	P55 (FRAME)	0.07
36	EARTH	0.07

According to the manufacture's QC report, the resistance of each ESP cell collector or ionizer (from collector/ionizer plate to busbar terminal) should be less than 0.5 ohm, and the APS ESP busbar resistance should be less than or equal to 0.1 ohm. The total passing resistance for ionizer / collector would be the sum of the resistance of two cells (2 cell × 0.5 ohm) and the resistance of the busbar (0.1 ohm). Therefore, the passing criteria of ionizer /collector continuity test is under 1.1 ohm.
The passing criteria between frame plate /collector earth plate and earth is under 0.6 ohm.

C. Comment

Tested / Checked by: (Name of CTA Representative)	Name: Ho Tony	Signature:	Date: 24/01/2025
Witnessed by: (Name of JEC Representative)	Name: Tony Ho	Signature:	Date: 24/01/2025
Witnessed by: (Name of GCL)	Name: Raymond Lau	Signature:	Date: 24/01/2025
Witnessed by: (Name of AMMJV)	Name: SIU TSZ TUNG (RIOW)	Signature:	Date: 24/1/2025
Witnessed by: (Name of)	Name:	Signature:	Date:
Witnessed by: (Name of)	Name:	Signature:	Date:

Gammon

CTA INTERNATIONAL AS

T&C for ESP Filter

AIR PURIFICATION SYSTEM (APS)
ESP FILTER ELECTRICAL TEST INSPECTION CHECK FORM

Project: Contract No. HY/2019/13 Central Kowloon Route - Buildings, Electrical and Mechanical Works

RISC NO.: RISC/SI/030996

Date: 24/01/2025

APS Sub-System : ESP Filter System *

Room Name : Plenum 2

Sub-assembly : 04 ESP filter

Location: YVB / HVB/ KVB *

T&C Plan Ref. No.: ~~03054~~ J3883-TCS-S-08866

Reference drawing:

Electrical Test - Continuity Test

A.Test instruments

Type	Model	Serial No. of Instrument	Calibration Certificated No.	Date of Calibration
MULTIMETER	2APC	60100020	AQ-SBH-102	2024/03/22

B. Commissioning Tests

APS Plenum 2 ESP Sub-assembly: 04

Item	Test Conductor	P1 (IONIZER)	P2 (IONIZER)	P3 (IONIZER)
1	P4 (IONIZER)	0.19	N.A.	N.A.
2	P5 (IONIZER)	N.A.	0.18	N.A.
3	P6 (IONIZER)	N.A.	N.A.	0.15
4	P7 (IONIZER)	0.24	N.A.	N.A.
5	P8 (IONIZER)	N.A.	0.17	N.A.
6	P9 (IONIZER)	N.A.	N.A.	0.18
7	P10 (IONIZER)	0.25	N.A.	N.A.
8	P11 (IONIZER)	N.A.	0.18	N.A.
9	P12 (IONIZER)	N.A.	N.A.	0.16
10	P13 (IONIZER)	0.21	N.A.	N.A.
11	P14 (IONIZER)	N.A.	0.19	N.A.
12	P15 (IONIZER)	N.A.	N.A.	0.23
13	P16 (IONIZER)	0.27	N.A.	N.A.
14	P17 (IONIZER)	N.A.	0.2	N.A.
15	P18 (IONIZER)	N.A.	N.A.	0.19

According to the manufacture's QC report, the resistance of each ESP cell collector or ionizer (from collector/ionizer plate to busbar terminal) should be less than 0.5 ohm, and the APS ESP busbar resistance should be less than or equal to 0.1 ohm. The total passing resistance for ionizer / collector would be the sum of the resistance of two cells (2 cell * 0.5 ohm) and the resistance of the busbar (0.1 ohm).
Therefore, the passing criteria of ionizer /collector continuity test is under 1.1 ohm.
The passing criteria between frame plate /collector earth plate and earth is under 0.6 ohm.

C. Comment

Tested / Checked by: (Name of CTA Representative)	Name: Ho Tung	Signature:	Date: 24/01/2025
Witnessed by: (Name of JEC Representative)	Name: Tony Hi	Signature:	Date: 24/01/2025
Witnessed by: (Name of GCL)	Name: Raymond Lau	Signature:	Date: 24/01/2025
Witnessed by: (Name of AMMJV)	Name: Siu Tsz Tung (Rico)	Signature:	Date: 24/1/2025
Witnessed by: (Name of	Name:	Signature:	Date:
Witnessed by: (Name of	Name:	Signature:	Date:

Gammon

CTA INTERNATIONAL AS CLEAN TUNNEL AIR

AIR PURIFICATION SYSTEM (APS)
ESP FILTER ELECTRICAL TEST INSPECTION CHECK FORM

T&C for ESP Filter

Project: Contract No. HY/2019/13 Central Kowloon Route - Buildings, Electrical and Mechanical Works

RISC NO.: RTSL/SI/030996

Date: 24/01/2025

APS Sub-System : ESP Filter System *

Room Name : Plenum 2

Sub-assembly : 04 ESP filter

Location: YVB / HVB/ KVB *

T&C Plan Ref. No.: J3183-TVS-S-06866

Reference drawing:

Electrical Test - Continuity Test

A. Test instruments

Type	Model	Serial No. of Instrument	Calibration Certificated No.	Date of Calibration
MULTIMETER	28PC	60100020	AQ-SBBH-102	2024/03/20

B. Commissioning Tests

APS Plenum 2 ESP Sub-assembly: 04

Item	Test Conductor	P19 (COLLECTOR)
1	P20 (COLLECTOR)	0.23
2	P21 (COLLECTOR)	0.17
3	P22 (COLLECTOR)	0.13
4	P23 (COLLECTOR)	0.23
5	P24 (COLLECTOR)	0.23
6	P25 (COLLECTOR)	0.13
7	P26 (COLLECTOR)	0.26
8	P27 (COLLECTOR)	0.25
9	P28 (COLLECTOR)	0.16
10	P29 (COLLECTOR)	0.16
11	P30 (COLLECTOR)	0.19
12	P31 (COLLECTOR)	0.16
13	P32 (COLLECTOR)	0.16
14	P33 (COLLECTOR)	0.17
15	P34 (COLLECTOR)	0.16
16	P35 (COLLECTOR)	0.23
17	P36 (COLLECTOR)	0.19

Item	Test Conductor	P37 (COLLECTOR EARTH)
18	P38 (COLLECTOR EARTH)	0.07
19	P39 (COLLECTOR EARTH)	0.09
20	P40 (COLLECTOR EARTH)	0.08
21	P41 (COLLECTOR EARTH)	0.09
22	P42 (COLLECTOR EARTH)	0.09
23	P43 (COLLECTOR EARTH)	0.08
24	P44 (COLLECTOR EARTH)	0.08
25	P45 (COLLECTOR EARTH)	0.09
26	P46 (COLLECTOR EARTH)	0.09
27	P47 (COLLECTOR EARTH)	0.09
28	P48 (COLLECTOR EARTH)	0.08
29	P49 (COLLECTOR EARTH)	0.08
30	P50 (COLLECTOR EARTH)	0.08
31	P51 (COLLECTOR EARTH)	0.09
32	P52 (COLLECTOR EARTH)	0.09
33	P53 (COLLECTOR EARTH)	0.09
34	P54 (COLLECTOR EARTH)	0.09
35	P55 (FRAME)	0.08
36	EARTH	0.07

According to the manufacture`s QC report, the resistance of each ESP cell collector or ionizer (from collector/ionizer plate to busbar terminal) should be less than 0.5 ohm, and the APS ESP busbar resistance should be less than or equal to 0.1 ohm. The total passing resistance for ionizer / collector would be the sum of the resistance of two cells (2 cell * 0.5 ohm) and the resistance of the busbar (0.1 ohm). Therefore, the passing criteria of ionizer /collector continuity test is under 1.1 ohm.
The passing criteria between frame plate /collector earth plate and earth is under 0.6 ohm.

C. Comment

Tested / Checked by: (Name of CTA Representative)	Name: Ho Tung	Signature:	Date: 24/01/2025
Witnessed by: (Name of JEC Representative)	Name: Tony Ho	Signature:	Date: 24/01/2025
Witnessed by: (Name of GCL)	Name: Raymond Lau	Signature:	Date: 24/01/2025
Witnessed by: (Name of AMMJV)	Name: SIU TSZ TUNG (RIOW)	Signature:	Date: 24/1/2025
Witnessed by: (Name of)	Name:	Signature:	Date:
Witnessed by: (Name of)	Name:	Signature:	Date:

Gammon

CTA INTERNATIONAL AS

AIR PURIFICATION SYSTEM (APS)
ESP FILTER ELECTRICAL TEST INSPECTION CHECK FORM

T&C for ESP Filter

Project: Contract No. HY/2019/13 Central Kowloon Route - Buildings, Electrical and Mechanical Works

RISC NO.: RISC/SI/030996

Date: ~~20~~24/01/2025

APS Sub-System : ESP Filter System *

Room Name : Plenum 2

Sub-assembly : 05 ESP filter

Location: YVB / HVB / KVB *

T&C Plan Ref. No.: 5388-TVS-C-06866

Reference drawing:

Electrical Test - Continuity Test

A.Test instruments

Type	Model	Serial No. of Instrument	Calibration Certificated No.	Date of Calibration
MULTIMETER	28PC	60100020	AQ-SBB17-102	2024/03/20

B. Commissioning Tests

APS Plenum 2 ESP Sub-assembly: 05

Item	Test Conductor	P1 (IONIZER)	P2 (IONIZER)	P3 (IONIZER)
1	P4 (IONIZER)	0.15	N.A.	N.A.
2	P5 (IONIZER)	N.A.	0.17	N.A.
3	P6 (IONIZER)	N.A.	N.A.	0.28
4	P7 (IONIZER)	0.26	N.A.	N.A.
5	P8 (IONIZER)	N.A.	0.18	N.A.
6	P9 (IONIZER)	N.A.	N.A.	0.17
7	P10 (IONIZER)	0.26	N.A.	N.A.
8	P11 (IONIZER)	N.A.	0.18	N.A.
9	P12 (IONIZER)	N.A.	N.A.	0.18
10	P13 (IONIZER)	0.19	N.A.	N.A.
11	P14 (IONIZER)	N.A.	0.19	N.A.
12	P15 (IONIZER)	N.A.	N.A.	0.19
13	P16 (IONIZER)	0.19	N.A.	N.A.
14	P17 (IONIZER)	N.A.	0.23	N.A.
15	P18 (IONIZER)	N.A.	N.A.	0.20

According to the manufacture's QC report, the resistance of each ESP cell collector or ionizer (from collector/ionizer plate to busbar terminal) should be less than 0.5 ohm, and the APS ESP busbar resistance should be less than or equal to 0.1 ohm. The total passing resistance for ionizer / collector would be the sum of the resistance of two cells (2 cell * 0.5 ohm) and the resistance of the busbar (0.1 ohm).
Therefore, the passing criteria of ionizer /collector continuity test is under 1.1 ohm.
The passing criteria between frame plate /collector earth plate and earth is under 0.6 ohm.

C. Comment

Tested / Checked by: (Name of CTA Representative)	Name: Ho Tung	Signature:	Date: 24/01/2025
Witnessed by: (Name of JEC Representative)	Name: Tony Ho	Signature:	Date: 24/01/2025
Witnessed by: (Name of GCL)	Name: Raymond Law	Signature:	Date: 24/01/2025
Witnessed by: (Name of AMMJV)	Name: SIU TSZ TUNG (RIOW)	Signature:	Date: 24/1/2025
Witnessed by: (Name of	Name:	Signature:	Date:
Witnessed by: (Name of	Name:	Signature:	Date:

Gammon

CTA INTERNATIONAL AS CLEAN TUNNEL AIR

AIR PURIFICATION SYSTEM (APS)
ESP FILTER ELECTRICAL TEST INSPECTION CHECK FORM

T&C for ESP Filter

Project: Contract No. HY/2019/13 Central Kowloon Route - Buildings, Electrical and Mechanical Works

RISC NO.: RISC/SS/030996

Date: 24/01/2025

APS Sub-System : ESP Filter System *

Room Name: P/Room 2

Sub-assembly : 05 ESP filter

Location: YVB / HVB/ KVB*

T&C Plan Ref. No.: J3883-TVS-S-06860

Reference drawing:

Electrical Test - Continuity Test

A. Test instruments

Type	Model	Serial No. of Instrument	Calibration Certificated No.	Date of Calibration
MULTIMETER	2AIC	80/00020	AQ-SB871-102	2024/07/20

B. Commissioning Tests

APS Plenum _____ ESP Sub-assembly: _____

Item	Test Conductor	P19 (COLLECTOR)
1	P20 (COLLECTOR)	0.14
2	P21 (COLLECTOR)	0.16
3	P22 (COLLECTOR)	0.13
4	P23 (COLLECTOR)	0.15
5	P24 (COLLECTOR)	0.16
6	P25 (COLLECTOR)	0.16
7	P26 (COLLECTOR)	0.16
8	P27 (COLLECTOR)	0.17
9	P28 (COLLECTOR)	0.16
10	P29 (COLLECTOR)	0.17
11	P30 (COLLECTOR)	0.18
12	P31 (COLLECTOR)	0.16
13	P32 (COLLECTOR)	0.31
14	P33 (COLLECTOR)	0.18
15	P34 (COLLECTOR)	0.17
16	P35 (COLLECTOR)	0.25
17	P36 (COLLECTOR)	0.19

Item	Test Conductor	P37 (COLLECTOR EARTH)
18	P38 (COLLECTOR EARTH)	0.08
19	P39 (COLLECTOR EARTH)	0.08
20	P40 (COLLECTOR EARTH)	0.08
21	P41 (COLLECTOR EARTH)	0.08
22	P42 (COLLECTOR EARTH)	0.09
23	P43 (COLLECTOR EARTH)	0.09
24	P44 (COLLECTOR EARTH)	0.08
25	P45 (COLLECTOR EARTH)	0.08
26	P46 (COLLECTOR EARTH)	0.09
27	P47 (COLLECTOR EARTH)	0.09
28	P48 (COLLECTOR EARTH)	0.10
29	P49 (COLLECTOR EARTH)	0.09
30	P50 (COLLECTOR EARTH)	0.08
31	P51 (COLLECTOR EARTH)	0.09
32	P52 (COLLECTOR EARTH)	0.13
33	P53 (COLLECTOR EARTH)	0.08
34	P54 (COLLECTOR EARTH)	0.09
35	P55 (FRAME)	0.08
36	EARTH	0.07

According to the manufacture's QC report, the resistance of each ESP cell collector or ionizer (from collector/ionizer plate to busbar terminal) should be less than 0.5 ohm, and the APS ESP busbar resistance should be less than or equal to 0.1 ohm. The total passing resistance for ionizer / collector would be the sum of the resistance of two cells (2 cell × 0.5 ohm) and the resistance of the busbar (0.1 ohm). Therefore, the passing criteria of ionizer /collector continuity test is under 1.1 ohm.
The passing criteria between frame plate /collector earth plate and earth is under 0.6 ohm.

C. Comment

Tested / Checked by: (Name of CTA Representative)	Name: Ho Tung	Signature:	Date: 24/01/2025
Witnessed by: (Name of JEC Representative)	Name: Tung Ho	Signature:	Date: 24/01/2025
Witnessed by: (Name of GCL)	Name: Raymond Lau	Signature:	Date: 24/01/2025
Witnessed by: (Name of AMMJV)	Name: SIU TSZ TUNG (RIOW)	Signature:	Date: 24/1/2025
Witnessed by: (Name of)	Name:	Signature:	Date:
Witnessed by: (Name of)	Name:	Signature:	Date:

Gammon

CTA INTERNATIONAL AS CLEAN TUNNEL AIR

AIR PURIFICATION SYSTEM (APS)
ESP FILTER 1ST FIXING INSPECTION CHECK FORM

T&C for ESP Filter

Project:	Contract No. HY/2019/13 Central Kowloon Route - Buildings, Electrical and Mechanical Works	RISC NO.:	RISC/SI/030994
		Date:	13/01/2025
APS Sub-System :	ESP Filter System *	Room Name :	Plenum 3
Location:	~~YVB / HVB~~/ KVB *		
T&C Plan Ref. No.:	J3883-TVS-S-06866		
Reference drawing:	J3883-TVS-D-01839		

A. ESP Cells Serial No. test form

Sub-assembly : Section 1

Brand Name : CTA

Model No.: CTA ESP

Items	Location		ESP Cell Serial no.
	Column	Row	
1)	1	1	0388002323 120578
2)	1	2	0388002323 010659
3)	1	3	0388002323 010665
4)	1	4	0388002323 120550
5)	1	5	0388002323 070742
6)	1	6	0388002323 010664
7)	2	1	0388002323 010657
8)	2	2	0388002323 120545
9)	2	3	0388002323 010701
10)	2	4	0388002323 010697
11)	2	5	0388002323 120477
12)	2	6	0388002323 120494
13)	3	1	0388002323 120505
14)	3	2	0388002323 120533
15)	3	3	0388002323 010625
16)	3	4	0388002323 120539
17)	3	5	0388002323 120490
18)	3	6	0388002323 010674

B. Comment

Tested / Checked by: (Name of CTA Representative)	Name: Ho Tung	Signature: Robert Ho	Date: 13/01/2025
Witnessed by: (Name of JEC Representative)	Name: John Chan	Signature:	Date: 13/01/2025
Witnessed by: (Name of GCL)	Name: Raymond Lau	Signature:	Date: 13/01/2025
Witnessed by: (Name of AMMJV)	Name: S S HO	Signature:	Date: 13/1/2025
Witnessed by: (Name of)	Name:	Signature:	Date:
Witnessed by: (Name of)	Name:	Signature:	Date:

Gammon

CTA INTERNATIONAL AS CLEAN TUNNEL AIR

AIR PURIFICATION SYSTEM (APS)
ESP FILTER 1ST FIXING INSPECTION CHECK FORM

T&C for ESP Filter

Project:	Contract No. HY/2019/13 Central Kowloon Route - Buildings, Electrical and Mechanical Works	RISC NO.:	RISC/SI/030994
		Date:	13/01/2025
APS Sub-System :	ESP Filter System *	Room Name :	Plenum 3
Location:	~~YVB / HVB~~/ KVB *		
T&C Plan Ref. No.:	J3883-TVS-S-06866		
Reference drawing:	J3883-TVS-D-01839		

A. ESP Cells Serial No. test form

Sub-assembly : Section 2

Brand Name : CTA

Model No.: CTA ESP

Items	Location		ESP Cell Serial no.
	Column	Row	
1)	1	1	0388002323 120517
2)	1	2	0388002323 120484
3)	1	3	0388002323 010624
4)	1	4	0388002323 120535
5)	1	5	0388002323 120548
6)	1	6	0388002323 120549
7)	2	1	0388002323 120476
8)	2	2	0388002323 010693
9)	2	3	0388002323 120518
10)	2	4	0388002323 120514
11)	2	5	0388002323 010738
12)	2	6	0388002323 010616
13)	3	1	0388002323 120540
14)	3	2	0388002323 010695
15)	3	3	0388002323 010651
16)	3	4	0388002323 120504
17)	3	5	0388002323 010733
18)	3	6	0388002323 120574

B. Comment

Tested / Checked by: (Name of CTA Representative)	Name: Ho Tung	Signature: Robert Ho	Date: 13/01/2025
Witnessed by: (Name of JEC Representative)	Name: John Chan	Signature:	Date: 13/01/2025
Witnessed by: (Name of GCL)	Name: Raymond Lau	Signature:	Date: 13/01/2025
Witnessed by: (Name of AMMJV)	Name: S S Ho	Signature:	Date: 13/1/2025
Witnessed by: (Name of)	Name:	Signature:	Date:
Witnessed by: (Name of)	Name:	Signature:	Date:

Gammon

CTA INTERNATIONAL AS CLEAN TUNNEL AIR

AIR PURIFICATION SYSTEM (APS)
ESP FILTER 1ST FIXING INSPECTION CHECK FORM

T&C for ESP Filter

Project:	Contract No. HY/2019/13 Central Kowloon Route - Buildings, Electrical and Mechanical Works	RISC NO.:	RISC/SI/030994
		Date:	13/01/2025
APS Sub-System :	ESP Filter System *	Room Name :	Plenum 3
Location:	~~YVB / HVB~~/ KVB *		
T&C Plan Ref. No.:	J3883-TVS-S-06866		
Reference drawing:	J3883-TVS-D-01839		

A. ESP Cells Serial No. test form

Sub-assembly : Section 3

Brand Name : CTA

Model No.: CTA ESP

Items	Location		ESP Cell Serial no.
	Column	Row	
1)	1	1	0388002323 120562
2)	1	2	0388002323 120474
3)	1	3	0388002323 010645
4)	1	4	0388002323 120547
5)	1	5	0388002323 120499
6)	1	6	0388002323 120510
7)	2	1	0388002323 120588
8)	2	2	0388002323 010626
9)	2	3	0388002323 120572
10)	2	4	0388002323 120563
11)	2	5	0388002323 120567
12)	2	6	0388002323 010640
13)	3	1	0388002323 070743
14)	3	2	0388002323 120580
15)	3	3	0388002323 010639
16)	3	4	0388002323 120551
17)	3	5	0388002323 120555
18)	3	6	0388002323 120564

B. Comment

Tested / Checked by: (Name of CTA Representative)	Name: Ho Tung	Signature: Robert Ho	Date: 13/01/2025
Witnessed by: (Name of JEC Representative)	Name: John Chan	Signature:	Date: 13/01/2025
Witnessed by: (Name of GCL)	Name: Raymond Lau	Signature:	Date: 13/01/2025
Witnessed by: (Name of AMMJV)	Name: S S Ho	Signature:	Date: 13/1/2025
Witnessed by: (Name of)	Name:	Signature:	Date:
Witnessed by: (Name of)	Name:	Signature:	Date:

Gammon

CTA INTERNATIONAL AS CLEAN TUNNEL AIR

AIR PURIFICATION SYSTEM (APS)
ESP FILTER 1ST FIXING INSPECTION CHECK FORM

T&C for ESP Filter

Project:	Contract No. HY/2019/13 Central Kowloon Route - Buildings, Electrical and Mechanical Works	RISC NO.:	RISC/SI/030994
		Date:	13/01/2025
APS Sub-System :	ESP Filter System *	Room Name :	Plenum 3
Location:	~~YVB / HVB~~/ KVB *		
T&C Plan Ref. No.:	J3883-TVS-S-06866		
Reference drawing:	J3883-TVS-D-01839		

A. ESP Cells Serial No. test form

Sub-assembly : Section 4

Brand Name : CTA

Model No.: CTA ESP

Items	Location		ESP Cell Serial no.
	Column	Row	
1)	1	1	0388002323 010700
2)	1	2	0388002323 120501
3)	1	3	0388002323 010622
4)	1	4	0388002323 120577
5)	1	5	0388002323 120530
6)	1	6	0388002323 120486
7)	2	1	0388002323 120493
8)	2	2	0388002323 010685
9)	2	3	0388002323 070741
10)	2	4	0388002323 120482
11)	2	5	0388002323 010592
12)	2	6	0388002323 010696
13)	3	1	0388002323 010641
14)	3	2	0388002323 120491
15)	3	3	0388002323 010720
16)	3	4	0388002323 120584
17)	3	5	0388002323 010717
18)	3	6	0388002323 010632

B. Comment

Tested / Checked by: (Name of CTA Representative)	Name: Ho Tung	Signature: Robert Ho	Date: 13/01/2025
Witnessed by: (Name of JEC Representative)	Name: John Chan	Signature:	Date: 13/01/2025
Witnessed by: (Name of GCL)	Name: Raymond Lau	Signature:	Date: 13/01/2025
Witnessed by: (Name of AMMJV)	Name: S S HO	Signature:	Date: 13/1/2025
Witnessed by: (Name of)	Name:	Signature:	Date:
Witnessed by: (Name of)	Name:	Signature:	Date:

Gammon

CTA INTERNATIONAL AS CLEAN TUNNEL AIR

AIR PURIFICATION SYSTEM (APS)
ESP FILTER 1ST FIXING INSPECTION CHECK FORM

T&C for ESP Filter

Project:	Contract No. HY/2019/13 Central Kowloon Route - Buildings, Electrical and Mechanical Works	RISC NO.:	RISC/SI/030994
		Date:	13/01/2025
APS Sub-System :	ESP Filter System *	Room Name :	Plenum 3
Location:	~~YVB / HVB~~/ KVB *		
T&C Plan Ref. No.:	J3883-TVS-S-06866		
Reference drawing:	J3883-TVS-D-01839		

A. ESP Cells Serial No. test form

Sub-assembly : Section 5

Brand Name : CTA

Model No.: CTA ESP

Items	Location		ESP Cell Serial no.
	Column	Row	
1)	1	1	0388002323 010596
2)	1	2	0388002323 120510
3)	1	3	0388002323 120481
4)	1	4	0388002323 120472
5)	1	5	0388002323 010653
6)	1	6	0388002323 120471
7)	2	1	0388002323 010727
8)	2	2	0388002323 120485
9)	2	3	0388002323 120496
10)	2	4	0388002323 120475
11)	2	5	0388002323 010631
12)	2	6	0388002323 010718
13)	3	1	0388002323 010598
14)	3	2	0388002323 120511
15)	3	3	0388002323 120497
16)	3	4	0388002323 120543
17)	3	5	0388002323 010599
18)	3	6	0388002323 010591

B. Comment

Tested / Checked by: (Name of CTA Representative)	Name: Ho Tung	Signature: Robert Ho	Date: 13/01/2025
Witnessed by: (Name of JEC Representative)	Name: John Chan	Signature:	Date: 13/01/2025
Witnessed by: (Name of GCL)	Name: Raymond Lau	Signature:	Date: 13/01/2025
Witnessed by: (Name of AMMJV)	Name: SS Ho	Signature:	Date: 13/1/2025
Witnessed by: (Name of)	Name:	Signature:	Date:
Witnessed by: (Name of)	Name:	Signature:	Date:

Gammon

CTA INTERNATIONAL AS CLEAN TUNNEL AIR

AIR PURIFICATION SYSTEM (APS)
ESP FILTER ELECTRICAL TEST INSPECTION CHECK FORM

T&C for ESP Filter

Project: Contract No. HY/2019/13 Central Kowloon Route - Buildings, Electrical and Mechanical Works

RISC NO.: RISC/SI/030997

Date: 5/2/2025

APS Sub-System : ESP Filter System *

Room Name : Plenum 3

Sub-assembly : ESP Filter 1

Location: ~~YVB / HVB~~/ KVB *

T&C Plan Ref. No.: J3883-TVS-S-06866

Reference drawing: J3883-TVS-D-01839

Electrical Test - Continuity Test

A.Test instruments

Type	Model	Serial No. of Instrument	Calibration Certificated No.	Date of Calibration
Multimeter	28PC	60100020	AQ-SBBH-102	2024-03-20

B. Commissioning Tests

APS Plenum 3 ESP Sub-assembly: 1

Item	Test Conductor	P1 (IONIZER)	P2 (IONIZER)	P3 (IONIZER)
1	P4 (IONIZER)	0.29	N.A.	N.A.
2	P5 (IONIZER)	N.A.	0.308	N.A.
3	P6 (IONIZER)	N.A.	N.A.	0.25
4	P7 (IONIZER)	0.10	N.A.	N.A.
5	P8 (IONIZER)	N.A.	0.09	N.A.
6	P9 (IONIZER)	N.A.	N.A.	0.1
7	P10 (IONIZER)	0.14	N.A.	N.A.
8	P11 (IONIZER)	N.A.	0.1	N.A.
9	P12 (IONIZER)	N.A.	N.A.	0.11
10	P13 (IONIZER)	0.11	N.A.	N.A.
11	P14 (IONIZER)	N.A.	0.11	N.A.
12	P15 (IONIZER)	N.A.	N.A.	0.12
13	P16 (IONIZER)	0.13	N.A.	N.A.
14	P17 (IONIZER)	N.A.	0.11	N.A.
15	P18 (IONIZER)	N.A.	N.A.	0.12

According to the manufacture's QC report, the resistance of each ESP cell collector or ionizer (from collector/ionizer plate to busbar terminal) should be less than 0.5 ohm, and the APS ESP busbar resistance should be less than or equal to 0.1 ohm. The total passing resistance for ionizer / collector would be the sum of the resistance of two cells (2 cell * 0.5 ohm) and the resistance of the busbar (0.1 ohm).
Therefore, the passing criteria of ionizer /collector continuity test is under 1.1 ohm.
The passing criteria between frame plate /collector earth plate and earth is under 0.6 ohm.

C. Comment

Tested / Checked by: (Name of CTA Representative)	Name: Chase Wong	Signature:	Date: 5-2-2025
Witnessed by: (Name of JEC Representative)	Name: John Chan	Signature:	Date: 5-2-2025
Witnessed by: (Name of GCL	Name: Raymond Lau	Signature:	Date: 5/2/2025
Witnessed by: (Name of AMMJV	Name: SIU TSZ TUNG (RIOW)	Signature:	Date: 5/2/2025
Witnessed by: (Name of	Name:	Signature:	Date:
Witnessed by: (Name of	Name:	Signature:	Date:

Gammon

CTA INTERNATIONAL AS CLEAN TUNNEL AIR

AIR PURIFICATION SYSTEM (APS)
ESP FILTER ELECTRICAL TEST INSPECTION CHECK FORM

T&C for ESP Filter

Project: Contract No. HY/2019/13 Central Kowloon Route - Buildings, Electrical and Mechanical Works

RISC NO.: RISC/SI/030997

Date: 5/2/2025

APS Sub-System : ESP Filter System *

Room Name : Plenum 3

Sub-assembly : ESP Filter 1

Location: ~~YVB / HVB~~/ KVB *

T&C Plan Ref. No.: J3883-TVS-S-06866

Reference drawing: J3883-TVS-D-01839

Electrical Test - Continuity Test

A. Test instruments

Type	Model	Serial No. of Instrument	Calibration Certificated No.	Date of Calibration
Multimeter	28Dc	60100020	AQ-SBBH-102	2024-03-20

B. Commissioning Tests

APS Plenum 3 ESP Sub-assembly: 1

Item	Test Conductor	P19 (COLLECTOR)
1	P20 (COLLECTOR)	0.06
2	P21 (COLLECTOR)	0.07
3	P22 (COLLECTOR)	0.07
4	P23 (COLLECTOR)	0.22
5	P24 (COLLECTOR)	0.17
6	P25 (COLLECTOR)	0.06
7	P26 (COLLECTOR)	0.07
8	P27 (COLLECTOR)	0.41
9	P28 (COLLECTOR)	0.32
10	P29 (COLLECTOR)	0.10
11	P30 (COLLECTOR)	0.16
12	P31 (COLLECTOR)	0.27
13	P32 (COLLECTOR)	0.1
14	P33 (COLLECTOR)	0.21
15	P34 (COLLECTOR)	0.31
16	P35 (COLLECTOR)	0.18
17	P36 (COLLECTOR)	0.1

Item	Test Conductor	P37 (COLLECTOR EARTH)
18	P38 (COLLECTOR EARTH)	0.01
19	P39 (COLLECTOR EARTH)	0.01
20	P40 (COLLECTOR EARTH)	0.01
21	P41 (COLLECTOR EARTH)	0.01
22	P42 (COLLECTOR EARTH)	0.01
23	P43 (COLLECTOR EARTH)	0.01
24	P44 (COLLECTOR EARTH)	0.01
25	P45 (COLLECTOR EARTH)	0.01
26	P46 (COLLECTOR EARTH)	0.01
27	P47 (COLLECTOR EARTH)	0.02
28	P48 (COLLECTOR EARTH)	0.01
29	P49 (COLLECTOR EARTH)	0.01
30	P50 (COLLECTOR EARTH)	0.01
31	P51 (COLLECTOR EARTH)	0.01
32	P52 (COLLECTOR EARTH)	0.01
33	P53 (COLLECTOR EARTH)	0.01
34	P54 (COLLECTOR EARTH)	0.61
35	P55 (FRAME)	0.01
36	EARTH	0.01

According to the manufacture's QC report, the resistance of each ESP cell collector or ionizer (from collector/ionizer plate to busbar terminal) should be less than 0.5 ohm, and the APS ESP busbar resistance should be less than or equal to 0.1 ohm. The total passing resistance for ionizer / collector would be the sum of the resistance of two cells (2 cell * 0.5 ohm) and the resistance of the busbar (0.1 ohm). Therefore, the passing criteria of ionizer /collector continuity test is under 1.1 ohm.
The passing criteria between frame plate /collector earth plate and earth is under 0.6 ohm.

C. Comment

Tested / Checked by: (Name of CTA Representative)	Name: Chan Wong	Signature:	Date: 5-2-2025
Witnessed by: (Name of JEC Representative)	Name: John Chan	Signature:	Date: 5/2/25
Witnessed by: (Name of GCL)	Name: Raymond Lau	Signature:	Date: 5/2/2025
Witnessed by: (Name of AMMJV)	Name: Siu Tsz Tung (RIOW)	Signature:	Date: 5/2/2025
Witnessed by: (Name of)	Name:	Signature:	Date:
Witnessed by: (Name of)	Name:	Signature:	Date:

Gammon

CTA INTERNATIONAL AS CLEAN TUNNEL AIR

AIR PURIFICATION SYSTEM (APS)
ESP FILTER ELECTRICAL TEST INSPECTION CHECK FORM

T&C for ESP Filter

Project: Contract No. HY/2019/13 Central Kowloon Route - Buildings, Electrical and Mechanical Works

RISC NO.: RISC/SI/030997

Date: 5/2/2025

APS Sub-System : ESP Filter System *

Room Name : Plenum 3

Sub-assembly : ESP Filter 2

Location: ~~YVB / HVB~~/ KVB *

T&C Plan Ref. No.: J3883-TVS-S-06866

Reference drawing: J3883-TVS-D-01839

Electrical Test - Continuity Test

A.Test instruments

Type	Model	Serial No. of Instrument	Calibration Certificated No.	Date of Calibration
Multimeter	28DC	60100020	AQ-SBBH-102	2024-03-20

B. Commissioning Tests

APS Plenum 3 ESP Sub-assembly: 2

Item	Test Conductor	P1 (IONIZER)	P2 (IONIZER)	P3 (IONIZER)
1	P4 (IONIZER)	0.09	N.A.	N.A.
2	P5 (IONIZER)	N.A.	0.09	N.A.
3	P6 (IONIZER)	N.A.	N.A.	0.09
4	P7 (IONIZER)	0.08	N.A.	N.A.
5	P8 (IONIZER)	N.A.	0.09	N.A.
6	P9 (IONIZER)	N.A.	N.A.	0.10
7	P10 (IONIZER)	0.1	N.A.	N.A.
8	P11 (IONIZER)	N.A.	0.11	N.A.
9	P12 (IONIZER)	N.A.	N.A.	0.15
10	P13 (IONIZER)	0.11	N.A.	N.A.
11	P14 (IONIZER)	N.A.	0.11	N.A.
12	P15 (IONIZER)	N.A.	N.A.	0.13
13	P16 (IONIZER)	0.12	N.A.	N.A.
14	P17 (IONIZER)	N.A.	0.22	N.A.
15	P18 (IONIZER)	N.A.	N.A.	0.11

According to the manufacture's QC report, the resistance of each ESP cell collector or ionizer (from collector/ionizer plate to busbar terminal) should be less than 0.5 ohm, and the APS ESP busbar resistance should be less than or equal to 0.1 ohm. The total passing resistance for ionizer / collector would be the sum of the resistance of two cells (2 cell * 0.5 ohm) and the resistance of the busbar (0.1 ohm).
Therefore, the passing criteria of ionizer /collector continuity test is under 1.1 ohm.
The passing criteria between frame plate /collector earth plate and earth is under 0.6 ohm.

C. Comment

Tested / Checked by: (Name of CTA Representative)	Name: Chase Wong	Signature:	Date: 5-2-2025
Witnessed by: (Name of JEC Representative)	Name: John Chen	Signature:	Date: 5/2/25
Witnessed by: (Name of GCL	Name: Raymond Lau	Signature:	Date: 5/2/2025
Witnessed by: (Name of AMMJV	Name: SIU TSZ TUNG (RIOW)	Signature:	Date: 5/2/2025
Witnessed by: (Name of	Name:	Signature:	Date:
Witnessed by: (Name of	Name:	Signature:	Date:

Gammon

CTA INTERNATIONAL AS CLEAN TUNNEL AIR

AIR PURIFICATION SYSTEM (APS)
ESP FILTER ELECTRICAL TEST INSPECTION CHECK FORM

T&C for ESP Filter

Project: Contract No. HY/2019/13 Central Kowloon Route - Buildings, Electrical and Mechanical Works

RISC NO.: RISC/SI/030997

Date: 5/2/2025

APS Sub-System : ESP Filter System *

Room Name : Plenum 3

Sub-assembly : ESP Filter 2

Location: ~~YVB / HVB~~/ KVB *

T&C Plan Ref. No.: J3883-TVS-S-06866

Reference drawing: J3883-TVS-D-01839

Electrical Test - Continuity Test

A. Test instruments

Type	Model	Serial No. of Instrument	Calibration Certificated No.	Date of Calibration
Multimeter	28/DC	60100020	AQ-SBBH-102	2024-03-20

B. Commissioning Tests

APS Plenum 3 ESP Sub-assembly: 2

Item	Test Conductor	P19 (COLLECTOR)
1	P20 (COLLECTOR)	0.27
2	P21 (COLLECTOR)	0.27
3	P22 (COLLECTOR)	0.31
4	P23 (COLLECTOR)	0.25
5	P24 (COLLECTOR)	0.4
6	P25 (COLLECTOR)	0.61
7	P26 (COLLECTOR)	0.43
8	P27 (COLLECTOR)	0.37
9	P28 (COLLECTOR)	0.27
10	P29 (COLLECTOR)	0.33
11	P30 (COLLECTOR)	0.5
12	P31 (COLLECTOR)	0.3
13	P32 (COLLECTOR)	0.47
14	P33 (COLLECTOR)	0.40
15	P34 (COLLECTOR)	0.52
16	P35 (COLLECTOR)	0.33
17	P36 (COLLECTOR)	0.31

Item	Test Conductor	P37 (COLLECTOR EARTH)
18	P38 (COLLECTOR EARTH)	0.01
19	P39 (COLLECTOR EARTH)	0.01
20	P40 (COLLECTOR EARTH)	0.01
21	P41 (COLLECTOR EARTH)	0.01
22	P42 (COLLECTOR EARTH)	0.01
23	P43 (COLLECTOR EARTH)	0.01
24	P44 (COLLECTOR EARTH)	0.01
25	P45 (COLLECTOR EARTH)	0.01
26	P46 (COLLECTOR EARTH)	0.01
27	P47 (COLLECTOR EARTH)	0.01
28	P48 (COLLECTOR EARTH)	0.02
29	P49 (COLLECTOR EARTH)	0.02
30	P50 (COLLECTOR EARTH)	0.01
31	P51 (COLLECTOR EARTH)	0.02
32	P52 (COLLECTOR EARTH)	0.02
33	P53 (COLLECTOR EARTH)	0.01
34	P54 (COLLECTOR EARTH)	0.02
35	P55 (FRAME)	0.01
36	EARTH	0.01

According to the manufacture's QC report, the resistance of each ESP cell collector or ionizer (from collector/ionizer plate to busbar terminal) should be less than 0.5 ohm, and the APS ESP busbar resistance should be less than or equal to 0.1 ohm. The total passing resistance for ionizer / collector would be the sum of the resistance of two cells (2 cell * 0.5 ohm) and the resistance of the busbar (0.1 ohm). Therefore, the passing criteria of ionizer /collector continuity test is under 1.1 ohm.
The passing criteria between frame plate /collector earth plate and earth is under 0.6 ohm.

C. Comment

Tested / Checked by: (Name of CTA Representative)	Name: Chase Wong	Signature:	Date: 5-2-2025
Witnessed by: (Name of JEC Representative)	Name: John Chan	Signature:	Date: 5/2/25
Witnessed by: (Name of GCL)	Name: Raymond Lau	Signature:	Date: 5/2/2025
Witnessed by: (Name of AMMJV)	Name: SIU TSZ TUNG (R10W)	Signature:	Date: 5/2/2025
Witnessed by: (Name of)	Name:	Signature:	Date:
Witnessed by: (Name of)	Name:	Signature:	Date:

Gammon

CTA INTERNATIONAL AS CLEAN TUNNEL AIR

AIR PURIFICATION SYSTEM (APS)
ESP FILTER ELECTRICAL TEST INSPECTION CHECK FORM

T&C for ESP Filter

Project: Contract No. HY/2019/13 Central Kowloon Route - Buildings, Electrical and Mechanical Works

RISC NO.: RISC/SI/030997

Date: 5/2/2025

APS Sub-System : ESP Filter System *

Room Name : Plenum 3

Sub-assembly : ESP Filter 3

Location: ~~YVB / HVB~~/ KVB *

T&C Plan Ref. No.: J3883-TVS-S-06866

Reference drawing: J3883-TVS-D-01839

Electrical Test - Continuity Test

A.Test instruments

Type	Model	Serial No. of Instrument	Calibration Certificated No.	Date of Calibration
Multimeter	28DC	60100020	AQ-SBBH-102	2024-03-20

B. Commissioning Tests

APS Plenum 3 ESP Sub-assembly: 3

Item	Test Conductor	P1 (IONIZER)	P2 (IONIZER)	P3 (IONIZER)
1	P4 (IONIZER)	0.51	N.A.	N.A.
2	P5 (IONIZER)	N.A.	0.09	N.A.
3	P6 (IONIZER)	N.A.	N.A.	0.52
4	P7 (IONIZER)	0.11	N.A.	N.A.
5	P8 (IONIZER)	N.A.	0.09	N.A.
6	P9 (IONIZER)	N.A.	N.A.	0.52
7	P10 (IONIZER)	0.12	N.A.	N.A.
8	P11 (IONIZER)	N.A.	0.11	N.A.
9	P12 (IONIZER)	N.A.	N.A.	0.54
10	P13 (IONIZER)	0.13	N.A.	N.A.
11	P14 (IONIZER)	N.A.	0.22	N.A.
12	P15 (IONIZER)	N.A.	N.A.	0.56
13	P16 (IONIZER)	0.14	N.A.	N.A.
14	P17 (IONIZER)	N.A.	0.26	N.A.
15	P18 (IONIZER)	N.A.	N.A.	0.57

According to the manufacture`s QC report, the resistance of each ESP cell collector or ionizer (from collector/ionizer plate to busbar terminal) should be less than 0.5 ohm, and the APS ESP busbar resistance should be less than or equal to 0.1 ohm. The total passing resistance for ionizer / collector would be the sum of the resistance of two cells (2 cell * 0.5 ohm) and the resistance of the busbar (0.1 ohm).
Therefore, the passing criteria of ionizer /collector continuity test is under 1.1 ohm.
The passing criteria between frame plate /collector earth plate and earth is under 0.6 ohm.

C. Comment

Tested / Checked by: (Name of CTA Representative)	Name: Chase Wong	Signature:	Date: 5-2-2025
Witnessed by: (Name of JEC Representative)	Name: John Chan	Signature:	Date: 5/2/25
Witnessed by: (Name of GCL	Name: Raymond Lau	Signature:	Date: 5/2/2025
Witnessed by: (Name of AMMJV	Name: SIU TSZ TUNG (RIOW)	Signature:	Date: 5/2/2025
Witnessed by: (Name of	Name:	Signature:	Date:
Witnessed by: (Name of	Name:	Signature:	Date:

Gammon

CTA INTERNATIONAL AS CLEAN TUNNEL AIR

AIR PURIFICATION SYSTEM (APS)
ESP FILTER ELECTRICAL TEST INSPECTION CHECK FORM

T&C for ESP Filter

Project: Contract No. HY/2019/13 Central Kowloon Route - Buildings, Electrical and Mechanical Works

RISC NO.: RISC/SI/030997

Date: 5/2/2025

APS Sub-System : ESP Filter System *

Room Name : Plenum 3

Sub-assembly : ESP Filter 3

Location: ~~YVB / HVB~~/ KVB *

T&C Plan Ref. No.: J3883-TVS-S-06866

Reference drawing: J3883-TVS-D-01839

Electrical Test - Continuity Test

A. Test instruments

Type	Model	Serial No. of Instrument	Calibration Certificated No.	Date of Calibration
Multimeter	28pc	60100020	AQ-SBBH-102	2024-03-20

B. Commissioning Tests

APS Plenum 3 ESP Sub-assembly: 3

Item	Test Conductor	P19 (COLLECTOR)
1	P20 (COLLECTOR)	0.18
2	P21 (COLLECTOR)	0.21
3	P22 (COLLECTOR)	0.4
4	P23 (COLLECTOR)	0.6
5	P24 (COLLECTOR)	0.16
6	P25 (COLLECTOR)	0.38
7	P26 (COLLECTOR)	0.15
8	P27 (COLLECTOR)	0.~~16~~41
9	P28 (COLLECTOR)	0.23
10	P29 (COLLECTOR)	0.16
11	P30 (COLLECTOR)	0.17
12	P31 (COLLECTOR)	0.15
13	P32 (COLLECTOR)	0.25
14	P33 (COLLECTOR)	0.21
15	P34 (COLLECTOR)	0.25
16	P35 (COLLECTOR)	0.13
17	P36 (COLLECTOR)	0.23

Item	Test Conductor	P37 (COLLECTOR EARTH)
18	P38 (COLLECTOR EARTH)	0.01
19	P39 (COLLECTOR EARTH)	0.01
20	P40 (COLLECTOR EARTH)	0.01
21	P41 (COLLECTOR EARTH)	0.01
22	P42 (COLLECTOR EARTH)	0.01
23	P43 (COLLECTOR EARTH)	0.01
24	P44 (COLLECTOR EARTH)	0.01
25	P45 (COLLECTOR EARTH)	0.01
26	P46 (COLLECTOR EARTH)	0.01
27	P47 (COLLECTOR EARTH)	0.01
28	P48 (COLLECTOR EARTH)	0.02
29	P49 (COLLECTOR EARTH)	0.02
30	P50 (COLLECTOR EARTH)	0.01
31	P51 (COLLECTOR EARTH)	0.02
32	P52 (COLLECTOR EARTH)	0.01
33	P53 (COLLECTOR EARTH)	0.01
34	P54 (COLLECTOR EARTH)	0.01
35	P55 (FRAME)	0.01
36	EARTH	0.01

According to the manufacture`s QC report, the resistance of each ESP cell collector or ionizer (from collector/ionizer plate to busbar terminal) should be less than 0.5 ohm, and the APS ESP busbar resistance should be less than or equal to 0.1 ohm. The total passing resistance for ionizer / collector would be the sum of the resistance of two cells (2 cell * 0.5 ohm) and the resistance of the busbar (0.1 ohm). Therefore, the passing criteria of ionizer /collector continuity test is under 1.1 ohm.
The passing criteria between frame plate /collector earth plate and earth is under 0.6 ohm.

C. Comment

Tested / Checked by: (Name of CTA Representative)	Name: Chace Wong	Signature:	Date: 5-2-2025
Witnessed by: (Name of JEC Representative)	Name: John Chan	Signature:	Date: 5/2/25
Witnessed by: (Name of GCL)	Name: Raymond Lau	Signature:	Date: 5/2/2025
Witnessed by: (Name of AMMJV)	Name: SIU TSZ TUNG (RIOW)	Signature:	Date: 5/2/2025
Witnessed by: (Name of)	Name:	Signature:	Date:
Witnessed by: (Name of)	Name:	Signature:	Date:

Gammon

CTA INTERNATIONAL AS CLEAN TUNNEL AIR

AIR PURIFICATION SYSTEM (APS)
ESP FILTER ELECTRICAL TEST INSPECTION CHECK FORM

T&C for ESP Filter

Project: Contract No. HY/2019/13 Central Kowloon Route - Buildings, Electrical and Mechanical Works

RISC NO.: RISC/SI/030997

Date: 5/2/2025

APS Sub-System : ESP Filter System *

Room Name : Plenum 3

Sub-assembly : ESP Filter 4

Location: ~~YVB / HVB~~/ KVB *

T&C Plan Ref. No.: J3883-TVS-S-06866

Reference drawing: J3883-TVS-D-01839

Electrical Test - Continuity Test

A.Test instruments

Type	Model	Serial No. of Instrument	Calibration Certificated No.	Date of Calibration
Multimeter	28pc	60100020	AQ-SBBH-102	2024-03-20

B. Commissioning Tests

APS Plenum 3 ESP Sub-assembly: 4

Item	Test Conductor	P1 (IONIZER)	P2 (IONIZER)	P3 (IONIZER)
1	P4 (IONIZER)	0.10	N.A.	N.A.
2	P5 (IONIZER)	N.A.	0.11	N.A.
3	P6 (IONIZER)	N.A.	N.A.	0.09
4	P7 (IONIZER)	0.08	N.A.	N.A.
5	P8 (IONIZER)	N.A.	0.10	N.A.
6	P9 (IONIZER)	N.A.	N.A.	0.09
7	P10 (IONIZER)	0.1	N.A.	N.A.
8	P11 (IONIZER)	N.A.	0.16	N.A.
9	P12 (IONIZER)	N.A.	N.A.	0.46
10	P13 (IONIZER)	0.28	N.A.	N.A.
11	P14 (IONIZER)	N.A.	0.12	N.A.
12	P15 (IONIZER)	N.A.	N.A.	0.11
13	P16 (IONIZER)	0.11	N.A.	N.A.
14	P17 (IONIZER)	N.A.	0.83	N.A.
15	P18 (IONIZER)	N.A.	N.A.	0.13

According to the manufacture's QC report, the resistance of each ESP cell collector or ionizer (from collector/ionizer plate to busbar terminal) should be less than 0.5 ohm, and the APS ESP busbar resistance should be less than or equal to 0.1 ohm. The total passing resistance for ionizer / collector would be the sum of the resistance of two cells (2 cell * 0.5 ohm) and the resistance of the busbar (0.1 ohm).
Therefore, the passing criteria of ionizer /collector continuity test is under 1.1 ohm.
The passing criteria between frame plate /collector earth plate and earth is under 0.6 ohm.

C. Comment

Tested / Checked by: (Name of CTA Representative)	Name: Chase Wong	Signature:	Date: 5-2-2025
Witnessed by: (Name of JEC Representative)	Name: John Chan	Signature:	Date: 5/2/25
Witnessed by: (Name of GCL	Name: Raymond Lau	Signature:	Date: 5/2/2025
Witnessed by: (Name of AMMJV	Name: SIU TSZ TUNG (RIOW)	Signature:	Date: 5/2/2025
Witnessed by: (Name of	Name:	Signature:	Date:
Witnessed by: (Name of	Name:	Signature:	Date:

Gammon

CTA INTERNATIONAL AS CLEAN TUNNEL AIR

AIR PURIFICATION SYSTEM (APS)
ESP FILTER ELECTRICAL TEST INSPECTION CHECK FORM

T&C for ESP Filter

Project: Contract No. HY/2019/13 Central Kowloon Route - Buildings, Electrical and Mechanical Works

RISC NO.: RISC/SI/030997

Date: 5/2/2025

APS Sub-System : ESP Filter System *

Room Name : Plenum 3

Sub-assembly : ESP Filter 4

Location: ~~YVB / HVB~~/ KVB *

T&C Plan Ref. No.: J3883-TVS-S-06866

Reference drawing: J3883-TVS-D-01839

Electrical Test - Continuity Test

A. Test instruments

Type	Model	Serial No. of Instrument	Calibration Certificated No.	Date of Calibration
Multimeter	28DC	60100020	AQ-SBBH-102	2024-03-20

B. Commissioning Tests

APS Plenum 3 ESP Sub-assembly: 4

Item	Test Conductor	P19 (COLLECTOR)
1	P20 (COLLECTOR)	0.17
2	P21 (COLLECTOR)	0.19
3	P22 (COLLECTOR)	0.24
4	P23 (COLLECTOR)	0.20
5	P24 (COLLECTOR)	0.24
6	P25 (COLLECTOR)	0.39
7	P26 (COLLECTOR)	0.22
8	P27 (COLLECTOR)	0.70
9	P28 (COLLECTOR)	0.20
10	P29 (COLLECTOR)	0.30
11	P30 (COLLECTOR)	0.23
12	P31 (COLLECTOR)	0.51
13	P32 (COLLECTOR)	0.43
14	P33 (COLLECTOR)	0.35
15	P34 (COLLECTOR)	0.19
16	P35 (COLLECTOR)	0.28
17	P36 (COLLECTOR)	0.19

Item	Test Conductor	P37 (COLLECTOR EARTH)
18	P38 (COLLECTOR EARTH)	0.01
19	P39 (COLLECTOR EARTH)	0.01
20	P40 (COLLECTOR EARTH)	0.01
21	P41 (COLLECTOR EARTH)	0.01
22	P42 (COLLECTOR EARTH)	0.01
23	P43 (COLLECTOR EARTH)	0.01
24	P44 (COLLECTOR EARTH)	0.01
25	P45 (COLLECTOR EARTH)	0.01
26	P46 (COLLECTOR EARTH)	0.02
27	P47 (COLLECTOR EARTH)	0.01
28	P48 (COLLECTOR EARTH)	0.01
29	P49 (COLLECTOR EARTH)	0.01
30	P50 (COLLECTOR EARTH)	0.01
31	P51 (COLLECTOR EARTH)	0.01
32	P52 (COLLECTOR EARTH)	0.01
33	P53 (COLLECTOR EARTH)	0.01
34	P54 (COLLECTOR EARTH)	0.02
35	P55 (FRAME)	0.01
36	EARTH	0.0

According to the manufacture's QC report, the resistance of each ESP cell collector or ionizer (from collector/ionizer plate to busbar terminal) should be less than 0.5 ohm, and the APS ESP busbar resistance should be less than or equal to 0.1 ohm. The total passing resistance for ionizer / collector would be the sum of the resistance of two cells (2 cell * 0.5 ohm) and the resistance of the busbar (0.1 ohm). Therefore, the passing criteria of ionizer /collector continuity test is under 1.1 ohm.
The passing criteria between frame plate /collector earth plate and earth is under 0.6 ohm.

C. Comment

Tested / Checked by: (Name of CTA Representative)	Name: Chave Wong	Signature:	Date: 5-2-2025
Witnessed by: (Name of JEC Representative)	Name: John Chan	Signature:	Date: 5/2/25
Witnessed by: (Name of GCL)	Name: Raymond Lau	Signature:	Date: 5/2/2025
Witnessed by: (Name of AMMJV)	Name: SIU TSZ TUNG (RICOW)	Signature:	Date: 5/2/2025
Witnessed by: (Name of)	Name:	Signature:	Date:
Witnessed by: (Name of)	Name:	Signature:	Date:

Gammon

CTA INTERNATIONAL AS CLEAN TUNNEL AIR

AIR PURIFICATION SYSTEM (APS)
ESP FILTER ELECTRICAL TEST INSPECTION CHECK FORM

T&C for ESP Filter

Project: Contract No. HY/2019/13 Central Kowloon Route - Buildings, Electrical and Mechanical Works

RISC NO.: RISC/SI/030997

Date: 5/2/2025

APS Sub-System : ESP Filter System *

Room Name : Plenum 3

Sub-assembly : ESP Filter 5

Location: ~~YVB / HVB~~/ KVB *

T&C Plan Ref. No.: J3883-TVS-S-06866

Reference drawing: J3883-TVS-D-01839

Electrical Test - Continuity Test

A.Test instruments

Type	Model	Serial No. of Instrument	Calibration Certificated No.	Date of Calibration
Multimeter	28DC	60100020	AQ-SBBH-102	2024-03-20

B. Commissioning Tests

APS Plenum 3 ESP Sub-assembly: 5

Item	Test Conductor	P1 (IONIZER)	P2 (IONIZER)	P3 (IONIZER)
1	P4 (IONIZER)	0.09	N.A.	N.A.
2	P5 (IONIZER)	N.A.	0.08	N.A.
3	P6 (IONIZER)	N.A.	N.A.	0.28
4	P7 (IONIZER)	0.09	N.A.	N.A.
5	P8 (IONIZER)	N.A.	0.09	N.A.
6	P9 (IONIZER)	N.A.	N.A.	0.49
7	P10 (IONIZER)	0.1	N.A.	N.A.
8	P11 (IONIZER)	N.A.	0.20	N.A.
9	P12 (IONIZER)	N.A.	N.A.	0.28
10	P13 (IONIZER)	0.1	N.A.	N.A.
11	P14 (IONIZER)	N.A.	0.11	N.A.
12	P15 (IONIZER)	N.A.	N.A.	0.26
13	P16 (IONIZER)	0.12	N.A.	N.A.
14	P17 (IONIZER)	N.A.	0.49	N.A.
15	P18 (IONIZER)	N.A.	N.A.	0.36

According to the manufacture's QC report, the resistance of each ESP cell collector or ionizer (from collector/ionizer plate to busbar terminal) should be less than 0.5 ohm, and the APS ESP busbar resistance should be less than or equal to 0.1 ohm. The total passing resistance for ionizer / collector would be the sum of the resistance of two cells (2 cell * 0.5 ohm) and the resistance of the busbar (0.1 ohm).
Therefore, the passing criteria of ionizer /collector continuity test is under 1.1 ohm.
The passing criteria between frame plate /collector earth plate and earth is under 0.6 ohm.

C. Comment

Tested / Checked by: (Name of CTA Representative)	Name: Chase Wong	Signature:	Date: 5.2.2025
Witnessed by: (Name of JEC Representative)	Name: John Chan	Signature:	Date: 5/2/25
Witnessed by: (Name of GCL	Name: Raymond Lau	Signature:	Date: 5/2/2025
Witnessed by: (Name of AMM JV	Name: SIU TSZ TUNG (RIOW)	Signature:	Date: 5/2/2025
Witnessed by: (Name of	Name:	Signature:	Date:
Witnessed by: (Name of	Name:	Signature:	Date:

Gammon

CTA INTERNATIONAL AS CLEAN TUNNEL AIR

AIR PURIFICATION SYSTEM (APS)
ESP FILTER ELECTRICAL TEST INSPECTION CHECK FORM

T&C for ESP Filter

Project: Contract No. HY/2019/13 Central Kowloon Route - Buildings, Electrical and Mechanical Works

RISC NO.: RISC/SI/030997
Date: 5/2/2025

APS Sub-System : ESP Filter System *
Room Name : Plenum 3

Sub-assembly : ESP Filter 5
Location: ~~YVB / HVB~~/ KVB *
T&C Plan Ref. No.: J3883-TVS-S-06866
Reference drawing: J3883-TVS-D-01839

Electrical Test - Continuity Test

A. Test instruments

Type	Model	Serial No. of Instrument	Calibration Certificated No.	Date of Calibration
Multimeter	28AC	60100020	AQ-SBBH-102	2024-03-20

B. Commissioning Tests

APS Plenum 3 ESP Sub-assembly: 5

Item	Test Conductor	P19 (COLLECTOR)
1	P20 (COLLECTOR)	0.09
2	P21 (COLLECTOR)	0.09
3	P22 (COLLECTOR)	0.35
4	P23 (COLLECTOR)	0.15
5	P24 (COLLECTOR)	0.11
6	P25 (COLLECTOR)	0.35
7	P26 (COLLECTOR)	0.23
8	P27 (COLLECTOR)	0.15
9	P28 (COLLECTOR)	0.30
10	P29 (COLLECTOR)	0.16
11	P30 (COLLECTOR)	0.3
12	P31 (COLLECTOR)	0.07
13	P32 (COLLECTOR)	0.13
14	P33 (COLLECTOR)	0.16
15	P34 (COLLECTOR)	0.12
16	P35 (COLLECTOR)	0.33
17	P36 (COLLECTOR)	0.18

Item	Test Conductor	P37 (COLLECTOR EARTH)
18	P38 (COLLECTOR EARTH)	0.01
19	P39 (COLLECTOR EARTH)	0.01
20	P40 (COLLECTOR EARTH)	0.01
21	P41 (COLLECTOR EARTH)	0.01
22	P42 (COLLECTOR EARTH)	0.01
23	P43 (COLLECTOR EARTH)	0.01
24	P44 (COLLECTOR EARTH)	0.01
25	P45 (COLLECTOR EARTH)	0.01
26	P46 (COLLECTOR EARTH)	0.01
27	P47 (COLLECTOR EARTH)	0.01
28	P48 (COLLECTOR EARTH)	0.01
29	P49 (COLLECTOR EARTH)	0.01
30	P50 (COLLECTOR EARTH)	0.01
31	P51 (COLLECTOR EARTH)	0.01
32	P52 (COLLECTOR EARTH)	0.01
33	P53 (COLLECTOR EARTH)	0.01
34	P54 (COLLECTOR EARTH)	0.01
35	P55 (FRAME)	0.01
36	EARTH	0.01

According to the manufacture's QC report, the resistance of each ESP cell collector or ionizer (from collector/ionizer plate to busbar terminal) should be less than 0.5 ohm, and the APS ESP busbar resistance should be less than or equal to 0.1 ohm. The total passing resistance for ionizer / collector would be the sum of the resistance of two cells (2 cell * 0.5 ohm) and the resistance of the busbar (0.1 ohm). Therefore, the passing criteria of ionizer /collector continuity test is under 1.1 ohm.
The passing criteria between frame plate /collector earth plate and earth is under 0.6 ohm.

C. Comment

Tested / Checked by: (Name of CTA Representative)	Name: Chase Wong	Signature:	Date: 5-2-2025
Witnessed by: (Name of JEC Representative)	Name: John Chan	Signature:	Date: 5/2/25
Witnessed by: (Name of GCL)	Name: Raymond Lau	Signature:	Date: 5/2/2025
Witnessed by: (Name of AMMJV)	Name: SIU TSZ TUNG (RIOW)	Signature:	Date: 5/2/2025
Witnessed by: (Name of)	Name:	Signature:	Date:
Witnessed by: (Name of)	Name:	Signature:	Date:

Appendix D – Site Acceptance Test (SAT) Reports for ESP HV Power Supply Units

Appendix D1 – Site Acceptance Test (SAT) Reports for YVB ESP HV Power Supply Units

Gammon

CTA INTERNATIONAL A/S CLEAN TUNNEL AIR

Air Purification System – HV Power Supply Units Test & Commissioning Report			
Contract No.:	HY/2019/13	RISC No.:	32045
Project:	Central Kowloon Route - Buildings, Electrical and Mechanical	Date:	21/03/2025
Location:	YVB / HVB / KVB	Room Name:	Plenum 1
T&C Plan Ref. No:	J3883-TVS-S-06253	Page:	
Ref. Dwg. No.:			

Part 1 : Installation Inspection of ESP HV Power Supply Cabinets (Sheet 1 of 3)			
A) ESP HV Power Supply Cabinets Information			
Cabinets ID:	YVB-APS1-ESP-PSC-01	Main Switch Rating:	~~63A~~ 80 A
Location:	ESP HV Switch Room 01 / 02	Supply Fed From:	YVB-DB-ESP01

B) Visual Inspection for ESP HV Power Supply Cabinets (TCP Section 4.3.1)		
Items	**Description of Inspection**	**Test Result**
a.	Verify cabinets are installed per the accepted ESP HV Switch Room layout and plant room details	P / F / NA
b.	Check clearance space (≥1400mm front, ≥600mm rear) per EMSD CoP	P / F / NA
c.	Ensure cabinets are securely fixed, sealed, and free of damage, corrosion, wear, or dust	P / F / NA
d.	Check that the cabinet door, door handle and lock are installed and operated properly	P / F / NA
C) Visual Inspection for Cabinet Top Cooling Units (TCP Section 4.3.2)		
a.	Check that the cabinet top cooling units are without visual damage, corrosion or sign of wear and tear	P / F / NA
b.	Check that the cabinet top cooling unit is securely fixed on top of the cabinets according to the accepted shop drawing and fabrication drawing	P / F / NA
c.	Check the exhaust lourve of the cabinet cooling unit to ensure no obstructions or blockages	P / F / NA
d.	Check the internal air duct is connected properly with the cabinet top cooling unit	P / F / NA
e.	Check the cable connection between cabinet and cooling unit are completed properly	P / F / NA
Remark: P / F / NA = Pass / Fail / Not Applicable		
Comment:		

Test / Checked By : REW No.: Grade (Name of CTA Representative)	Name: H. Tung	Signature:	Date: 21/03/2025
Witnessed By : (Name of JEC Representative)	Name: CHUNG	Signature:	Date: 21/03/2025
Witnessed By : (Name of GCL)	Name: Raymond Lau	Signature:	Date: 21/03/2025
Witnessed By : (Name of AMMSV)	Name: Sam Lui	Signature:	Date: 21/03/2025
Witnessed By : (Name of)	Name:	Signature:	Date:
Witnessed By : (Name of)	Name:	Signature:	Date:

Gammon

CTA INTERNATIONAL AS CLEAN TUNNEL AIR

Air Purification System – HV Power Supply Units Test & Commissioning Report			
Contract No.:	HY/2019/13	RISC No.:	32045
Project:	Central Kowloon Route - Buildings, Electrical and Mechanical	Date:	21/03/2025
Location:	YVB / HVB / KVB	Room Name:	plenum 1
T&C Plan Ref. No:	J3883-TVS-S-06283	Page:	
Ref. Dwg. No.:			

Part 1 : Installation Inspection of ESP HV Power Supply Cabinets (Sheet 2 of 3)		
Items	**Description of Inspection**	**Test Result**
D) Visual Inspection for ESP HV Power Supply Units (TCP Section 4.3.3)		
a.	No visible damage to impair safety	P / F / NA
b.	Check that the ESP HV power supply units are securely fixed inside the Power Supply Cabinet with no physical damage, or signs of deterioration	P / F / NA
c.	Check and record the equipment ID, manufacturer, model number, serial number and other information, showing on the name plate for cabinet top cooling unit and ESP HV power supply units, and record it the initial installed location on the test form	P / F / NA
E) Visual Inspection for Accessories inside the Cabinet (TCP Section 4.3.4)		
a.	Check that the limit switch is securely fixed on rear door of the cabinet with proper cabling works	P / F / NA
Remark: P / F / NA = Pass / Fail / Not Applicable		
Comment:		

Test / Checked By : REW No.: Grade (Name of CTA Representative)	Name: Ho Tung	Signature:	Date: 21/03/2025
Witnessed By : (Name of JEC Representative)	Name: CHUNG	Signature:	Date: 21/03/2025
Witnessed By : (Name of GCL)	Name: Raymond Lau	Signature:	Date: 21/03/2025
Witnessed By : (Name of AMMJV)	Name: Sam Lui	Signature:	Date: 21/03/2025
Witnessed By : (Name of)	Name:	Signature:	Date:
Witnessed By : (Name of)	Name:	Signature:	Date:

Gammon

CTA INTERNATIONAL AS

Air Purification System – HV Power Supply Units Test & Commissioning Report			
Contract No.:	HY/2019/13	RISC No.:	32045
Project:	Central Kowloon Route - Buildings, Electrical and Mechanical	Date:	21/03/2025
Location:	YVB / HVB / KVB	Room Name:	Plenum 1
T&C Plan Ref. No:	T388 3-TVS-S-06283	Page:	
Ref. Dwg. No.:			

Part 1 : Installation Inspection of ESP HV Power Supply Cabinets (Sheet 1 of 3)			
A) ESP HV Power Supply Cabinets Information			
Cabinets ID:	YVB-APS 1 -ESP-PSC-0 2	Main Switch Rating:	~~63A~~ 80
Location:	ESP HV Switch Room 01 / 02	Supply Fed From:	YVB-DB-ESP01

B) Visual Inspection for ESP HV Power Supply Cabinets (TCP Section 4.3.1)		
Items	**Description of Inspection**	**Test Result**
a.	Verify cabinets are installed per the accepted ESP HV Switch Room layout and plant room details	P / F / NA
b.	Check clearance space (≥1400mm front, ≥600mm rear) per EMSD CoP	P / F / NA
c.	Ensure cabinets are securely fixed, sealed, and free of damage, corrosion, wear, or dust	P / F / NA
d.	Check that the cabinet door, door handle and lock are installed and operated properly	P / F / NA
C) Visual Inspection for Cabinet Top Cooling Units (TCP Section 4.3.2)		
a.	Check that the cabinet top cooling units are without visual damage, corrosion or sign of wear and tear	P / F / NA
b.	Check that the cabinet top cooling unit is securely fixed on top of the cabinets according to the accepted shop drawing and fabrication drawing	P / F / NA
c.	Check the exhaust lourve of the cabinet cooling unit to ensure no obstructions or blockages	P / F / NA
d.	Check the internal air duct is connected properly with the cabinet top cooling unit	P / F / NA
e.	Check the cable connection between cabinet and cooling unit are completed properly	P / F / NA
Remark:	P / F / NA = Pass / Fail / Not Applicable	
Comment:		

Test / Checked By : REW No.: Grade (Name of CTA Representative)	Name: Ho Tung	Signature:	Date: 21/03/2025
Witnessed By : (Name of JEC Representative)	Name: CHUNG TP	Signature:	Date: 21/03/2025
Witnessed By : (Name of GCL)	Name: Raymond Lau	Signature:	Date: 21/03/2025
Witnessed By : (Name of AMSU)	Name: Sam Lui	Signature:	Date: 21/03/2025
Witnessed By : (Name of)	Name:	Signature:	Date:
Witnessed By : (Name of)	Name:	Signature:	Date:

Gammon

CTA INTERNATIONAL AS CLEAN TUNNEL AIR

Air Purification System – HV Power Supply Units Test & Commissioning Report			
Contract No.:	HY/2019/13	RISC No.:	32045
Project:	Central Kowloon Route - Buildings, Electrical and Mechanical	Date:	21/03/2025
Location:	YVB / HVB / KVB	Room Name:	Plenum 1
T&C Plan Ref. No:	JS883-TVS-S-06253	Page:	
Ref. Dwg. No.:			

Part 1 : Installation Inspection of ESP HV Power Supply Cabinets (Sheet 2 of 3)		
Items	**Description of Inspection**	**Test Result**
D) Visual Inspection for ESP HV Power Supply Units (TCP Section 4.3.3)		
a.	No visible damage to impair safety	(P) / F / NA
b.	Check that the ESP HV power supply units are securely fixed inside the Power Supply Cabinet with no physical damage, or signs of deterioration	(P) / F / NA
c.	Check and record the equipment ID, manufacturer, model number, serial number and other information, showing on the name plate for cabinet top cooling unit and ESP HV power supply units, and record it the initial installed location on the test form	(P) / F / NA
E) Visual Inspection for Accessories inside the Cabinet (TCP Section 4.3.4)		
a.	Check that the limit switch is securely fixed on rear door of the cabinet with proper cabling works	(P) / F / NA
Remark: P / F / NA = Pass / Fail / Not Applicable		
Comment:		

Test / Checked By : REW No.: Grade (Name of CTA Representative)	Name: Ho Tung	Signature:	Date: 21/03/2025
Witnessed By : (Name of JEC Representative)	Name: CHUNG	Signature:	Date: 21/03/2025
Witnessed By : (Name of GCL)	Name: Raymond Lau	Signature:	Date: 21/03/2025
Witnessed By : (Name of AMASU)	Name: Sam Lui	Signature:	Date: 21/03/2025
Witnessed By : (Name of)	Name:	Signature:	Date:
Witnessed By : (Name of)	Name:	Signature:	Date:

Gammon

CTA INTERNATIONAL AS

Air Purification System – HV Power Supply Units Test & Commissioning Report			
Contract No.:	HY/2019/13	RISC No.:	032046
Project:	Central Kowloon Route - Buildings, Electrical and Mechanical	Date:	25/03/2025
Location:	YVB / HVB / KVB	Room Name:	Plenum 1
T&C Plan Ref. No:	J3883-TVS-S-06283	Page:	
Ref. Dwg. No.:			

Part 2: Installation Inspection and Cable Tests for HV DC Cables (Sheet 1 of 2)

A) Visual Inspection (TCP Section 4.4.1)

Items	Description of Inspection	Test Result
a)	No visible damage to impair safety	(P) / F / NA
b)	Ensure all cables, HV connectors, cable glands & accessories are in good condition	(P) / F / NA
c)	All conductors are correctly and securely connected and identified, protected against mechanical damage, and adequately supported	(P) / F / NA

B) HV DC Cable Continuity Tests (TCP Section 4.4.2)

From:	ESP HV Switch Room (01) / 02	To:	APS Plenum No.(01) / 02 / 03 Sub-assembly (A) / B / C / D / E

Items	Circuit No. or Details of Equipment	Cable Length	Continuity Resistance (Ω)			Test Result
			Measured w/ (item 0)	Measured w/o (item 0)	Passing Criteria	
0	Spare Cable **(C)**			N/A	N/A	N/A
1	YVB-APS 1 -HVC- 1 Ionizer 1	21.1 m	0.67	0.33	0.52	(P) / F / NA
2	YVB-APS 1 -HVC- 2 Ionizer 2	20.8 m	0.58	0.29	0.51	(P) / F / NA
3	YVB-APS 1 -HVC- 3 Ionizer 3	20.2 m	0.58	0.29	0.49	(P) / F / NA
4	YVB-APS 1 -HVC- 4 Collector	21.9 m	0.67	0.34	0.54	(P) / F / NA

C) List of Testing Equipment / Instruments

Type	Model	Serial No	Calibration Cert. No	Date of Cert.
Digital Micro Ohmmeter	UT620CF	C242921984	ACZ20250222 0127	22/02/2025
Cable fault test	LCT 268-2(km)	250219005	ACZ20250222 0090	22/02/2025

Remark: P / F / NA = Pass / Fail / Not Applicable
Insulation Resistance should be >1000MΩ, Continuity Resistance shall be < 0.0245Ω/m **(B)**

Comment:

	Name:	Signature:	Date:
Test / Checked By : REW No.: Grade (Name of CTA Representative)	Ho Tung		25/03/2025
Witnessed By : (Name of JEC Representative)	CHUNG TP		25/03/2025
Witnessed By : (Name of GCL)	Raymond Lau		25/03/2025
Witnessed By : (Name of MMJV)	Sam Lui		25/03/2025
Witnessed By : (Name of)			
Witnessed By : (Name of)			

Gammon

CTA INTERNATIONAL AS CLEAN TUNNEL AIR

Air Purification System – HV Power Supply Units Test & Commissioning Report			
Contract No.:	HY/2019/13	RISC No.:	032046
Project:	Central Kowloon Route - Buildings, Electrical and Mechanical	Date:	25/03/2025
Location:	YVB / HVB / KVB	Room Name:	Plenum 1
T&C Plan Ref. No:	J3883-TVS-S-06283	Page:	
Ref. Dwg. No.:			

Part 2: Installation Inspection and Cable Tests for HV DC Cables (Sheet 1 of 2)

A) Visual Inspection (TCP Section 4.4.1)

Items	Description of Inspection	Test Result
a)	No visible damage to impair safety	P / F / NA
b)	Ensure all cables, HV connectors, cable glands & accessories are in good condition	P / F / NA
c)	All conductors are correctly and securely connected and identified, protected against mechanical damage, and adequately supported	P / F / NA

B) HV DC Cable Continuity Tests (TCP Section 4.4.2)

From: ESP HV Switch Room 01 / 02 To: APS Plenum No 01 / 02 / 03 Sub-assembly A / B / C / D / E

Items	Circuit No. or Details of Equipment	Cable Length	Continuity Resistance (Ω)			Test Result
			Measured w/ (item 0)	Measured w/o (item 0)	Passing Criteria	
0	Spare Cable (C)			N/A	N/A	N/A
1	YVB-APS 1 -HVC- 5 Ionizer 1	23.4m	0.89	0.44	0.57	P / F / NA
2	YVB-APS 1 -HVC- 6 Ionizer 2	23.1m	0.80	0.41	0.57	P / F / NA
3	YVB-APS 1 -HVC- 7 Ionizer 3	22.2m	0.80	0.39	0.54	P / F / NA
4	YVB-APS 1 -HVC- 8 Collector	24m	0.89	0.45	0.59	P / F / NA

C) List of Testing Equipment / Instruments

Type	Model	Serial No	Calibration Cert. No	Date of Cert.
Digital Micro Ohmeter	UT620 CT	C242921984	AC2202502220127	22/02/2025
Cable fault test	LCT 268-2(km)	250219005	AC2202502220090	22/02/2025

Remark: P / F / NA = Pass / Fail / Not Applicable
Insulation Resistance should be >1000MΩ, Continuity Resistance shall be < 0.0245Ω/m **(B)**

Comment:

Test / Checked By : REW No.: Grade (Name of CTA Representative)	Name: Ho Tung	Signature:	Date: 25/03/2025
Witnessed By : (Name of JEC Representative)	Name: CHUNG	Signature:	Date: 25/03/2025
Witnessed By : (Name of GCL)	Name: Raymond Lau	Signature:	Date: 25/03/2025
Witnessed By : (Name of AMSU)	Name: Sam Lui	Signature:	Date: 25/03/2025
Witnessed By : (Name of)	Name:	Signature:	Date:
Witnessed By : (Name of)	Name:	Signature:	Date:

Gammon

CTA INTERNATIONAL AS CLEAN TUNNEL AIR

Air Purification System – HV Power Supply Units Test & Commissioning Report			
Contract No.:	HY/2019/13	RISC No.:	032046
Project:	Central Kowloon Route - Buildings, Electrical and Mechanical	Date:	25/03/2025
Location:	YVB / HVB / KVB	Room Name:	Plenum 1
T&C Plan Ref. No:	J3883-TVS-S-06283	Page:	
Ref. Dwg. No.:			

Part 2: Installation Inspection and Cable Tests for HV DC Cables (Sheet 1 of 2)

A) Visual Inspection (TCP Section 4.4.1)

Items	Description of Inspection	Test Result
a)	No visible damage to impair safety	P / F / NA
b)	Ensure all cables, HV connectors, cable glands & accessories are in good condition	P / F / NA
c)	All conductors are correctly and securely connected and identified, protected against mechanical damage, and adequately supported	P / F / NA

B) HV DC Cable Continuity Tests (TCP Section 4.4.2)

From:	ESP HV Switch Room 01 / 02	To:	APS Plenum No. 01 / 02 / 03 Sub-assembly A / B / C / D / E

Items	Circuit No. or Details of Equipment	Cable Length	Continuity Resistance (Ω)			Test Result
			Measured w/ (item 0)	Measured w/o (item 0)	Passing Criteria	
0	Spare Cable **(C)**			N/A	N/A	N/A
1	YVB-APS 1 -HVC- 9 and Ionizer 1	24.9m	0.88	0.43	0.61	P / F / NA
2	YVB-APS 1 -HVC- 10 Ionizer 2	25.2m	0.84	0.43	0.62	P / F / NA
3	YVB-APS 1 -HVC- 11 Ionizer 3	24m	0.84	0.41	0.59	P / F / NA
4	YVB-APS 1 -HVC- 12 Collector	25.7m	0.86	0.45	0.63	P / F / NA

C) List of Testing Equipment / Instruments

Type	Model	Serial No	Calibration Cert. No	Date of Cert.
Digital Micro Ohmeter	UT620C+	C242921984	AC2202502220127	22/02/2025
Cable fault test	LCT268-2(km)	250219005	AC2202502220090	22/02/2025

Remark: P / F / NA = Pass / Fail / Not Applicable
Insulation Resistance should be >1000MΩ, Continuity Resistance shall be < 0.0245Ω/m **(B)**

Comment:

Test / Checked By : REW No.: Grade (Name of CTA Representative)	Name: Ho Tung	Signature:	Date: 25/03/2025
Witnessed By : (Name of JEC Representative)	Name: CHUNG	Signature:	Date: 25/03/2025
Witnessed By : (Name of GCL)	Name: Raymond Lam	Signature:	Date: 25/03/2025
Witnessed By : (Name of AMNJV)	Name: Sam Lui	Signature:	Date: 25/03/2025
Witnessed By : (Name of)	Name:	Signature:	Date:
Witnessed By : (Name of)	Name:	Signature:	Date:

Gammon

CTA INTERNATIONAL AS

Air Purification System – HV Power Supply Units Test & Commissioning Report			
Contract No.:	HY/2019/13	RISC No.:	032046
Project:	Central Kowloon Route - Buildings, Electrical and Mechanical	Date:	25/03/2025
Location:	YVB / HVB / KVB	Room Name:	Plenum 1
T&C Plan Ref. No:	J3883-TVS-5-06283	Page:	
Ref. Dwg. No.:			

Part 2: Installation Inspection and Cable Tests for HV DC Cables (Sheet 1 of 2)

A) Visual Inspection (TCP Section 4.4.1)

Items	Description of Inspection	Test Result
a)	No visible damage to impair safety	P / F / NA
b)	Ensure all cables, HV connectors, cable glands & accessories are in good condition	P / F / NA
c)	All conductors are correctly and securely connected and identified, protected against mechanical damage, and adequately supported	P / F / NA

B) HV DC Cable Continuity Tests (TCP Section 4.4.2)

From: ESP HV Switch Room 01 / 02 To: APS Plenum No 01 / 02 / 03 Sub-assembly A / B / C / D / E

Items	Circuit No. or Details of Equipment	Cable Length	Continuity Resistance (Ω)			Test Result
			Measured w/ (item 0)	Measured w/o (item 0)	Passing Criteria	
0	Spare Cable (C)			N/A	N/A	N/A
1	YVB-APS 1 -HVC-13 Ionizer 1	26.9m	1.00	0.49	0.66	P / F / NA
2	YVB-APS 1 -HVC-14 Ionizer 2	26.3m	0.91	0.46	0.64	P / F / NA
3	YVB-APS 1 -HVC-15 Ionizer 3	25.2m	0.91	0.45	0.62	P / F / NA
4	YVB-APS 1 -HVC-16 Collector	27.8m	1.00	0.51	0.68	P / F / NA

C) List of Testing Equipment / Instruments

Type	Model	Serial No	Calibration Cert. No	Date of Cert.
Digital Micro Ohmmeter	DT620C+	C242921984	AC220250222012 7	22/02/2025
Cable fault test	LCT268-2(km)	250219005	AC220250222009 0	22/02/2025

Remark: P / F / NA = Pass / Fail / Not Applicable
Insulation Resistance should be >1000MΩ, Continuity Resistance shall be < 0.0245Ω/m **(B)**

Comment:

Test / Checked By : REW No.: Grade (Name of CTA Representative)	Name: Ho Tung	Signature:	Date: 25/03/2025
Witnessed By : (Name of JEC Representative)	Name: CHUNG TP	Signature:	Date: 25/03/2025
Witnessed By : (Name of GCL)	Name: Raymond Lau	Signature:	Date: 25/03/2025
Witnessed By : (Name of AMMJV)	Name: Sam Lui	Signature:	Date: 25/03/2025
Witnessed By : (Name of)	Name:	Signature:	Date:
Witnessed By : (Name of)	Name:	Signature:	Date:

Gammon

CTA INTERNATIONAL AS CLEAN TUNNEL AIR

Air Purification System – HV Power Supply Units Test & Commissioning Report			
Contract No.:	HY/2019/13	RISC No.:	032046
Project:	Central Kowloon Route - Buildings, Electrical and Mechanical	Date:	25/03/2025
Location:	YVB / HVB / KVB	Room Name:	Plenum 1
T&C Plan Ref. No:	J3883-TVS-S-06283	Page:	
Ref. Dwg. No.:			

Part 2: Installation Inspection and Cable Tests for HV DC Cables (Sheet 1 of 2)

A) Visual Inspection (TCP Section 4.4.1)

Items	Description of Inspection	Test Result
a)	No visible damage to impair safety	P / F / NA
b)	Ensure all cables, HV connectors, cable glands & accessories are in good condition	P / F / NA
c)	All conductors are correctly and securely connected and identified, protected against mechanical damage, and adequately supported	P / F / NA

B) HV DC Cable Continuity Tests (TCP Section 4.4.2)

From: ESP HV Switch Room 01 / 02 To: APS Plenum No.01 / 02 / 03 Sub-assembly A / B / C / D / E

Items	Circuit No. or Details of Equipment	Cable Length	Continuity Resistance (Ω)			Test Result
			Measured w/ (item 0)	Measured w/o (item 0)	Passing Criteria	
0	Spare Cable (C)			N/A	N/A	N/A
1	YVB-APS1-HVC-17 Ionizer 1	28.4m	1.11	0.55	0.70	P / F / NA
2	YVB-APS1-HVC-18 Ionizer 2	28.4m	1.08	0.55	0.70	P / F / NA
3	YVB-APS1-HVC-19 Ionizer 3	27.8m	1.05	0.53	0.68	P / F / NA
4	YVB-APS1-HVC-20 Collector	29.3m	1.11	0.56	0.72	P / F / NA

C) List of Testing Equipment / Instruments

Type	Model	Serial No	Calibration Cert. No	Date of Cert.
Digital Micro Ohmeter	UT620CT	C242921984	ACZ20250222 0127	22/02/2025
Cable fault test	LCT2682(km)	250219005	ACZ20250220090	22/02/2025

Remark: P / F / NA = Pass / Fail / Not Applicable
Insulation Resistance should be >1000MΩ, Continuity Resistance shall be < 0.0245Ω/m **(B)**

Comment:

Test / Checked By : REW No.: Grade (Name of CTA Representative)	Name: Ho Tung	Signature:	Date: 25/03/2025
Witnessed By : (Name of JEC Representative)	Name: CHUNG	Signature:	Date: 25/03/2025
Witnessed By : (Name of GCL)	Name: Raymond Lau	Signature:	Date: 25/03/2025
Witnessed By : (Name of AMMSV)	Name: Sam Lui	Signature:	Date: 25/03/2025
Witnessed By : (Name of)	Name:	Signature:	Date:
Witnessed By : (Name of)	Name:	Signature:	Date:

Gammon

CTA INTERNATIONAL AS CLEAN TUNNEL AIR

Air Purification System – HV Power Supply Units Test & Commissioning Report			
Contract No.:	HY/2019/13	RISC No.:	32046
Project:	Central Kowloon Route - Buildings, Electrical and Mechanical	Date:	25/03/2025
Location:	YVB / HVB / KVB	Room Name:	Plenum 1
T&C Plan Ref. No:	13883-TVS-S-06283	Page:	
Ref. Dwg. No.:			

Part 2: Installation Inspection and Cable Tests for HV DC Cables (2 of 2)

D) Maximum Voltage Withstand Test for HV DC Cable (TCP Section 4.4.3)

Step 1 & 3 - Insulation Resistance Test before and after the Maximum Voltage Withstand Test

From:	ESP HV Switch Room 01 / 02	To:	APS Plenum No.01 / 02 / 03 Sub-assembly A / B / C / D / E

Items	Circuit No. or Details of Equipment	Cable Length	Insulation Resistance (MΩ) before Step 2	Insulation Resistance (MΩ) after Step 2	Test Result
1	YVB-APS 1 -HVC-3 Ionizer 3	20.2 m	500GΩ	130GΩ	P / F / NA
2	YVB-APS 1 -HVC-2 Ionizer 2	20.8 m	500GΩ	400GΩ	P / F / NA
3	YVB-APS 1 -HVC-1 Ionizer 1	21.1 m	500GΩ	400GΩ	P / F / NA
4	YVB-APS 1 -HVC-4 Collector	21.9 m	74GΩ	100GΩ	P / F / NA

Step 2 - Maximum Voltage Withstand Test

Items	Circuit No. or Details of Equipment	Test Voltage (kV DC)	Duration (Min)	Measured Voltage
1	YVB-APS 1 -HVC-3 Ionizer 3	20	1	20.3 kV
2	YVB-APS 1 -HVC-2 Ionizer 2	20	1	20.3 kV
3	YVB-APS 1 -HVC-1 Ionizer 1	20	1	20.3 kV
4	YVB-APS 1 -HVC-4 Collector	20	1	20.3 kV

E) List of Testing Equipment / Instruments

Type	Model	Serial No	Calibration Cert. No	Date of Cert.
HV insulation tester	AR3125	6819355	KS2525021278D001	26/02/2025
HV DC Voltage Meter	HVP-40DM	20240071	AC22025050308 01	03/03/2025

Remark: P / F / NA = Pass / Fail / Not Applicable,
The passing criteria for the test is passing the insulation test after for maximum voltage withstand test.
The insulation resistance is over 1000MOhm (*) for HV DC Cable and 30MOhm for ESP Cell

Comment:

	Name:	Signature:	Date:
Test / Checked By : REW No.: Grade (Name of CTA Representative)	Ho Ting		25/03/2025
Witnessed By : (Name of JEC Representative)	CHUNG		25/03/2025
Witnessed By : (Name of GCL)	Raymond Lau		25/03/2025
Witnessed By : (Name of AMMSU)	Sam Lui		25/03/2025
Witnessed By : (Name of)			
Witnessed By : (Name of)			

Gammon

CTA INTERNATIONAL AS CLEAN TUNNEL AIR

Air Purification System – HV Power Supply Units Test & Commissioning Report			
Contract No.:	HY/2019/13	RISC No.:	32046
Project:	Central Kowloon Route - Buildings, Electrical and Mechanical	Date:	25/03/2025
Location:	YVB / HVB / KVB	Room Name:	Plenum 1
T&C Plan Ref. No:	J3883-TVS-S-06283	Page:	
Ref. Dwg. No.:			

Part 2: Installation Inspection and Cable Tests for HV DC Cables (2 of 2)

D) Maximum Voltage Withstand Test for HV DC Cable (TCP Section 4.4.3)

Step 1 & 3 - Insulation Resistance Test before and after the Maximum Voltage Withstand Test

From:	ESP HV Switch Room 01 / 02	To:	APS Plenum No 01 / 02 / 03 Sub-assembly A / B / C / D / E

Items	Circuit No. or Details of Equipment	Cable Length	Insulation Resistance (MΩ) before Step 2	Insulation Resistance (MΩ) after Step 2	Test Result
1	Y VB-APS 1 -HVC- 7 Ionizer 3	22.2m	500GΩ	400GΩ	P / F / NA
2	Y VB-APS 1 -HVC- 6 Ionizer 2	23.1m	300GΩ	270GΩ	P / F / NA
3	Y VB-APS 1 -HVC- 5 Ionizer 1	23.4m	400GΩ	400GΩ	P / F / NA
4	Y VB-APS 1 -HVC- 8 Collector	24m	400GΩ	400GΩ	P / F / NA

Step 2 - Maximum Voltage Withstand Test

Items	Circuit No. or Details of Equipment	Test Voltage (kV DC)	Duration (Min)	Measured Voltage
1	Y VB-APS 1 -HVC- 7 Ionizer 3	20	1	20.3 kV
2	Y VB-APS 1 -HVC- 6 Ionizer 2	20	1	20.3 kV
3	Y VB-APS 1 -HVC- 5 Ionizer 1	20	1	20.3 kV
4	Y VB-APS 1 -HVC- 8 Collector	20	1	20.3 kV

E) List of Testing Equipment / Instruments

Type	Model	Serial No	Calibration Cert. No	Date of Cert.
HV insulation tester	AR3125	6819355	KS25250212780001	26/02/2025
HV DC Voltage Meter	HVP-40DM	20240071	AC220250303080 1	03/03/2025

Remark: P / F / NA = Pass / Fail / Not Applicable,
The passing criteria for the test is passing the insulation test after for maximum voltage withstand test.
The insulation resistance is over 1000MOhm (*) for HV DC Cable and 30MOhm for ESP Cell

Comment:

	Name:	Signature:	Date:
Test / Checked By : REW No.: Grade (Name of CTA Representative)	Ho Tung		25/03/2025
Witnessed By : (Name of JEC Representative)	CHUNG IP		25/03/2025
Witnessed By : (Name of GCL)	Raymond Lau		25/03/2025
Witnessed By : (Name of AMMSV)	Sam Lui		25/03/2025
Witnessed By : (Name of)			
Witnessed By : (Name of)			

Gammon

CTA INTERNATIONAL AS CLEAN TUNNEL AIR

Air Purification System – HV Power Supply Units Test & Commissioning Report			
Contract No.:	HY/2019/13	RISC No.:	32046
Project:	Central Kowloon Route - Buildings, Electrical and Mechanical	Date:	25/03/2025
Location:	YVB / HVB / KVB	Room Name:	Plenum 1
T&C Plan Ref. No:	J3883-TVS-S-06283	Page:	
Ref. Dwg. No.:			

Part 2: Installation Inspection and Cable Tests for HV DC Cables (2 of 2)

D) Maximum Voltage Withstand Test for HV DC Cable (TCP Section 4.4.3)

Step 1 & 3 - Insulation Resistance Test before and after the Maximum Voltage Withstand Test

From:	ESP HV Switch Room 01 / 02	To:	APS Plenum No 01 / 02 / 03 Sub-assembly A / B / C / D / E

Items	Circuit No. or Details of Equipment	Cable Length	Insulation Resistance (MΩ) before Step 2	Insulation Resistance (MΩ) after Step 2	Test Result
1	YVB-APS 1 -HVC-11 Ionizer 3	24m	400GΩ	400GΩ	P / F / NA
2	YVB-APS 1 -HVC-10 Ionizer 2	25.2m	400GΩ	400GΩ	P / F / NA
3	YVB-APS 1 -HVC-9 Ionizer 1	24.9m	400GΩ	400GΩ	P / F / NA
4	YVB-APS 1 -HVC-12 Collector	25.7m	400GΩ	400GΩ	P / F / NA

Step 2 - Maximum Voltage Withstand Test

Items	Circuit No. or Details of Equipment	Test Voltage (kV DC)	Duration (Min)	Measured Voltage
1	YVB-APS 1 -HVC-11 Ionizer 3	20	1	20.3 kV
2	YVB-APS 1 -HVC-10 Ionizer 2	20	1	20.3 kV
3	YVB-APS 1 -HVC-9 Ionizer 1	20	1	20.3 kV
4	YVB-APS 1 -HVC-12 Collector	20	1	20.3 kV

E) List of Testing Equipment / Instruments

Type	Model	Serial No	Calibration Cert. No	Date of Cert.
HV insulation tester	AR3125	6819355	KSZS25021278D001	26/02/2025
HV DC Voltage Meter	HVP-40DM	20240071	AC220250303080l	03/03/2025

Remark: P / F / NA = Pass / Fail / Not Applicable,
The passing criteria for the test is passing the insulation test after for maximum voltage withstand test.
The insulation resistance is over 1000MOhm (*) for HV DC Cable and 30MOhm for ESP Cell

Comment:

	Name:	Signature:	Date:
Test / Checked By : REW No.: Grade (Name of CTA Representative)	Ho Tung		25/03/2025
Witnessed By : (Name of JEC Representative)	CHUNG		25/03/2025
Witnessed By : (Name of GCL)	Raymond Lau		25/03/2025
Witnessed By : (Name of AMMSV)	Sam Lui		25/03/2025
Witnessed By : (Name of)			
Witnessed By : (Name of)			

Gammon

CTA INTERNATIONAL AS

Air Purification System – HV Power Supply Units Test & Commissioning Report			
Contract No.:	HY/2019/13	RISC No.:	32046
Project:	Central Kowloon Route - Buildings, Electrical and Mechanical	Date:	25/03/2025
Location:	YVB / HVB / KVB	Room Name:	Plenum 1
T&C Plan Ref. No:	53883-TVS-S-06283	Page:	
Ref. Dwg. No.:			

Part 2: Installation Inspection and Cable Tests for HV DC Cables (2 of 2)

D) Maximum Voltage Withstand Test for HV DC Cable (TCP Section 4.4.3)

Step 1 & 3 - Insulation Resistance Test before and after the Maximum Voltage Withstand Test

From:	ESP HV Switch Room 01 / 02	To:	APS Plenum No. 01 / 02 / 03 Sub-assembly A / B / C / D / E

Items	Circuit No. or Details of Equipment	Cable Length	Insulation Resistance (MΩ) before Step 2	Insulation Resistance (MΩ) after Step 2	Test Result
1	YVB-APS 1 -HVC-15 Ionizer 3	25.2m	400GΩ	400GΩ	P / F / NA
2	YVB-APS 1 -HVC-14 Ionizer 2	26.3m	400GΩ	130GΩ	P / F / NA
3	YVB-APS 1 -HVC-13 Ionizer 1	26.9m	400GΩ	100GΩ	P / F / NA
4	YVB-APS 1 -HVC-16 Collector	27.8m	400GΩ	400GΩ	P / F / NA

Step 2 - Maximum Voltage Withstand Test

Items	Circuit No. or Details of Equipment	Test Voltage (kV DC)	Duration (Min)	Measured Voltage
1	YVB-APS 1 -HVC-15 Ionizer 3	20	1	20.3 kV
2	YVB-APS 1 -HVC-14 Ionizer 2	20	1	20.3 kV
3	YVB-APS 1 -HVC-13 Ionizer 1	20	1	20.3 kV
4	YVB-APS 1 -HVC-16 Collector	20	1	20.3 kV

E) List of Testing Equipment / Instruments

Type	Model	Serial No	Calibration Cert. No	Date of Cert.
HV insulation tester	AR3125	6819355	KSZ25021278D001	26/02/2025
HV DC Voltage Meter	HVP-40DM	20240071	AC22025050308 01	03/03/2025

Remark: P / F / NA = Pass / Fail / Not Applicable,
The passing criteria for the test is passing the insulation test after for maximum voltage withstand test.
The insulation resistance is over 1000MOhm (*) for HV DC Cable and 30MOhm for ESP Cell

Comment:

	Name:	Signature:	Date:
Test / Checked By : REW No.: Grade (Name of CTA Representative)	Ho Ting		25/03/2025
Witnessed By : (Name of JEC Representative)	CHUNG		25/03/2025
Witnessed By : (Name of GCL)	Raymond Lau		25/03/2025
Witnessed By : (Name of AMNSV)	Sam Lui		25/03/2025
Witnessed By : (Name of)			
Witnessed By : (Name of)			

Gammon

CTA INTERNATIONAL AS CLEAN TUNNEL AIR

Air Purification System – HV Power Supply Units Test & Commissioning Report			
Contract No.:	HY/2019/13	RISC No.:	32046
Project:	Central Kowloon Route - Buildings, Electrical and Mechanical	Date:	25/03/2025
Location:	YVB / HVB / KVB	Room Name:	Plenum 1
T&C Plan Ref. No:	J3883-TVS-S-06283	Page:	
Ref. Dwg. No.:			

Part 2: Installation Inspection and Cable Tests for HV DC Cables (2 of 2)

D) Maximum Voltage Withstand Test for HV DC Cable (TCP Section 4.4.3)

Step 1 & 3 - Insulation Resistance Test before and after the Maximum Voltage Withstand Test

From:	ESP HV Switch Room 01 / 02	To:	APS Plenum No 01 / 02 / 03 Sub-assembly A / B / C / D / E

Items	Circuit No. or Details of Equipment	Cable Length	Insulation Resistance (MΩ) before Step 2	Insulation Resistance (MΩ) after Step 2	Test Result
1	YVB-APS 1 -HVC-19 Ionizer 3	27.8m	400GΩ	400GΩ	P / F / NA
2	YVB-APS 1 -HVC-18 Ionizer 2	28.4m	400GΩ	400GΩ	P / F / NA
3	YVB-APS 1 -HVC-17 Ionizer 1	28.4m	400GΩ	400GΩ	P / F / NA
4	YVB-APS 1 -HVC-20 Collector	29.3m	400GΩ	400GΩ	P / F / NA

Step 2 - Maximum Voltage Withstand Test

Items	Circuit No. or Details of Equipment	Test Voltage (kV DC)	Duration (Min)	Measured Voltage
1	YVB-APS 1 -HVC-19 Ionizer 3	20	1	20.3 kV
2	YVB-APS 1 -HVC-18 Ionizer 2	20	1	20.3 kV
3	YVB-APS 1 -HVC-17 Ionizer 1	20	1	20.3 kV
4	YVB-APS 1 -HVC-20 Collector	20	1	20.3 kV

E) List of Testing Equipment / Instruments

Type	Model	Serial No	Calibration Cert. No	Date of Cert.
HV insulation tester	AR3125	6819355	KS2525021278D001	26/02/2025
HV DC Voltage Meter	HVP-40DM	20240071	AC220250303080 1	03/03/2025

Remark: P / F / NA = Pass / Fail / Not Applicable,
The passing criteria for the test is passing the insulation test after for maximum voltage withstand test.
The insulation resistance is over 1000MOhm (*) for HV DC Cable and 30MOhm for ESP Cell

Comment:

	Name:	Signature:	Date:
Test / Checked By : REW No.: Grade (Name of CTA Representative)	Ho Ting		25/3/2025
Witnessed By : (Name of JEC Representative)	CHUNG		25/03/2025
Witnessed By : (Name of GCL)	Raymond Lau		25/03/2025
Witnessed By : (Name of AMMSV)	Sam Lai		25/03/2025
Witnessed By : (Name of)			
Witnessed By : (Name of)			

Gammon

CIA INTERNATIONAL AS

Air Purification System – HV Power Supply Units Test & Commissioning Report			
Contract No.:	HY/2019/13	RISC No.:	32048
Project:	Central Kowloon Route - Buildings, Electrical and Mechanical	Date:	21/03/2025
Location:	YVB / ~~HVB / KVB~~	Room Name:	HV Room 1
T&C Plan Ref. No:	J3883-TVS-S-06283	Page:	
Ref. Dwg. No.:			

Part 3: Inspection and Test for Electrical Installation of ESP Filter (TCP Section 4.5)

Statutory Inspection and Test for LV and HV DC Installation (Sheet 1 of 10)

Items	Description of Inspection	Test Result
A) Visual Inspection (ASD TCP-EE, COP Code 21A/C and COP Appendix 13) - Working Space and Facilities (L.V.)		
a.	Adequacy working space and safe access provided for switch room / electrical facilities.	P / F / NA
b.	Entrance / exit to switch room and/or electrical facilities are free of obstruction.	P / F / NA
c.	Suitable locking facilities provided for switch room and /or electrical facilities.	P / F / NA
d.	Suitable lighting provision provided for switch room and /or electrical facilities.	P / F / NA
e.	Suitable ventilation provision provided for switch room and /or electrical facilities.	P / F / NA
f.	A warning notice 'DANGER — ELECTRICITY, UNAUTHORISED ENTRY PROHIBITED' and '危 險 —— 有電，未經授權不得內進' provided at every entrance of switch room.	P / F / NA
g.	Danger notices, warning notices, schematic diagrams, instructions and similar information are correctly and adequately provided.	P / F / NA
h.	Warning notices for Switch Rooms provided in compliance with EMSD CoP Code 17.	P / F / NA
i.	Warning notices for earthing and main bonding connections provided in compliance with EMSD CoP Code 17.	P / F / NA
j.	All switchgears, distribution boards and electrical equipment properly labelled in compliance with EMSD CoP Code 4D(1).	P / F / NA
k.	Continuity of protective conductors especially the bonding of all exposed conductive parts are satisfactory.	P / F / NA
l.	Logbook provided and work done properly recorded.	P / F / NA
Remark:	P / F / NA = Pass / Fail / Not Applicable	
Comment:		

Test / Checked By : REW No.: Grade (Name of CTA Representative)	Name: Ho Tung	Signature: Ho Tung	Date: 21/03/2025
Witnessed By : (Name of JEC Representative)	Name: CHUNG	Signature:	Date: 21/03/2025
Witnessed By : (Name of GCL)	Name: Raymond Lau	Signature:	Date: 21/03/2025
Witnessed By : AMMJV (Name of)	Name: Eric Tang	Signature:	Date: 21/03/2025
Witnessed By : (Name of)	Name:	Signature:	Date:
Witnessed By : (Name of)	Name:	Signature:	Date:

Gammon

CTA INTERNATIONAL AS CLEAN TUNNEL AIR

Air Purification System – HV Power Supply Units Test & Commissioning Report			
Contract No.:	HY/2019/13	RISC No.:	32663
Project:	Central Kowloon Route - Buildings, Electrical and Mechanical	Date:	21/03/2025
Location:	YVB / HVB / KVB	Room Name:	Plenum 1
T&C Plan Ref. No:	J3883-TVS-S-06283	Page:	
Ref. Dwg. No.:			

Part 3: Inspection and Test for Electrical Installations (Sheet 2A of 5)

B) Earth Loop Impedance Test (TCP Section 4.5.3)

ESP HV Power Supply Cabinets Information

Cabinets ID:	YVB-APS01-ESP-PSC-01	Main Switch Rating:	80A
Location:	ESP HV Switch Room 01 / 02	Supply Fed From:	YVB-DB-ESP01

Circuit No	Details of Equipment	Type of Protective Device	Rating	Earth Loop Impedance (Zs) (Ω)	Test Result
1	YVB-APS01-PSU-01 A Subassembly I1	RCBO	16A SP	0.10	P / F / NA
2	YVB-APS01-PSU-02 A Subassembly I2	RCBO	16A SP	0.12	P / F / NA
3	YVB-APS01-PSU-03 A Subassembly I3	RCBO	16A SP	0.14	P / F / NA
4	YVB-APS01-PSU-04 A Subassembly C	RCBO	16A SP	0.13	P / F / NA
5	YVB-APS01-PSU-05 B Subassembly I1	RCBO	16A SP	0.12	P / F / NA
6	YVB-APS01-PSU-06 B Subassembly I2	RCBO	16A SP	0.13	P / F / NA
7	YVB-APS01-PSU-07 B Subassembly I3	RCBO	16A SP	0.13	P / F / NA
8	YVB-APS01-PSU-08 B Subassembly C	RCBO	16A SP	0.14	P / F / NA
9	YVB-APS01-PSU-09 C Subassembly I1	RCBO	16A SP	0.14	P / F / NA
10	YVB-APS01-PSU-10 C Subassembly I2	RCBO	16A SP	0.15	P / F / NA

Remark: P / F / NA = Pass / Fail / Not Applicable
The Passing Criteria for the Max Earth Fault Loop Independence shall refer to EMSD COP.

Comment:

	Name:	Signature:	Date:
Test / Checked By : REW No.: Grade (Name of CTA Representative)	Ho Tung		21/03/2025
Witnessed By : (Name of JEC Representative)	CHUNG		21/03/2025
Witnessed By : (Name of GCL)	Raymond Lau		21/03/2025
Witnessed By : (Name of AMMSV)	Sam Lai		21/3/2025
Witnessed By : (Name of)			
Witnessed By : (Name of)			

Gammon

CIA INTERNATIONAL AS CLEAN TUNNEL AIR

Air Purification System – HV Power Supply Units Test & Commissioning Report			
Contract No.:	HY/2019/13	RISC No.:	32663
Project:	Central Kowloon Route - Buildings, Electrical and Mechanical	Date:	21/03/2025
Location:	YVB / HVB / KVB	Room Name:	Plenum 1
T&C Plan Ref. No:	J3883-TVS-S-06283	Page:	
Ref. Dwg. No.:			

Part 3: Inspection and Test for Electrical Installations (Sheet 2B of 5)

B) Earth Loop Impedance Test (TCP Section 4.5.3)

ESP HV Power Supply Cabinets Information

Cabinets ID:	YVB-APS01 -ESP-PSC-02	Main Switch Rating:	80A
Location:	ESP HV Switch Room 01 / 02	Supply Fed From:	YVB-DB-ESP01

Circuit No	Details of Equipment	Type of Protective Device	Rating	Earth Loop Impedance (Zs) (Ω)	Test Result
1	YVB-APS01-PSU-11 C Subassembly I3	RCBO	16A SP	0.10	P / F / NA
2	YVB-APS01-PSU-12 C Subassembly C	RCBO	16A SP	0.11	P / F / NA
3	YVB-APS01-PSU-13 D Subassembly I1	RCBO	16A SP	0.11	P / F / NA
4	YVB-APS01-PSU-14 D Subassembly I2	RCBO	16A SP	0.12	P / F / NA
5	YVB-APS01-PSU-15 D Subassembly I3	RCBO	16A SP	0.13	P / F / NA
6	YVB-APS01-PSU-16 D Subassembly C	RCBO	16A SP	0.13	P / F / NA
7	YVB-APS01-PSU-17 E Subassembly I1	RCBO	16A SP	0.15	P / F / NA
8	YVB-APS01-PSU-18 E Subassembly I2	RCBO	16A SP	0.14	P / F / NA
9	YVB-APS01-PSU-19 E Subassembly I3	RCBO	16A SP	0.14	P / F / NA
10	YVB-APS01-PSU-20 E Subassembly C	RCBO	16A SP	0.15	P / F / NA

Remark: P / F / NA = Pass / Fail / Not Applicable
The Passing Criteria for the Max Earth Fault Loop Independence shall refer to EMSD COP.

Comment:

Test / Checked By : REW No.: Grade (Name of CTA Representative)	Name: Ho Tung	Signature:	Date: 21/03/2025
Witnessed By : (Name of JEC Representative)	Name: CHUNG TP	Signature:	Date: 21/03/2025
Witnessed By : (Name of GCL)	Name: Raymond Lau	Signature:	Date: 21/03/2025
Witnessed By : (Name of AMSV)	Name: Sam Lai	Signature:	Date: 21/3/2025
Witnessed By : (Name of)	Name:	Signature:	Date:
Witnessed By : (Name of)	Name:	Signature:	Date:

Gammon

CTA INTERNATIONAL AS CLEAN TUNNEL AIR

Air Purification System – HV Power Supply Units Test & Commissioning Report			
Contract No.:	HY/2019/13	RISC No.:	32663
Project:	Central Kowloon Route - Buildings, Electrical and Mechanical	Date:	21/03/2025
Location:	YVB / HVB / KVB	Room Name:	Plenum 1
T&C Plan Ref. No:	J3883-TVS-S-06283	Page:	
Ref. Dwg. No.:			

Part 3: Inspection and Test for Electrical Installations (Sheet 3 of 5)

D) Functional Test of Residual Current Device (RCD) (TCP Section 4.5.3)

ESP HV Power Supply Cabinets Information

Cabinets ID:	YVB-APS01-ESP-PSC-01	Main Switch Rating:	80 ~~63~~A
Location:	ESP HV Switch Room 01 / 02	Supply Fed From:	YVB-DB-ESP01

Circuit No. or Details of Equipment	Type of Protective Device	Rating	Polarity	RCD 50% (ms)	RCD 100% (ms)	Test Result
1	RCBO	16A SP	P / F / NA	P / F / NA	37.4	P / F / NA
2	RCBO	16A SP	P / F / NA	P / F / NA	26.9	P / F / NA
3	RCBO	16A SP	P / F / NA	P / F / NA	27.3	P / F / NA
4	RCBO	16A SP	P / F / NA	P / F / NA	37.0	P / F / NA
5	RCBO	16A SP	P / F / NA	P / F / NA	36.8	P / F / NA
6	RCBO	16A SP	P / F / NA	P / F / NA	37.2	P / F / NA
7	RCBO	16A SP	P / F / NA	P / F / NA	36.3	P / F / NA
8	RCBO	16A SP	P / F / NA	P / F / NA	37.0	P / F / NA
9	RCBO	16A SP	P / F / NA	P / F / NA	27.7	P / F / NA
10	RCBO	16A SP	P / F / NA	P / F / NA	26.6	P / F / NA

Remark: P / F / NA = Pass / Fail / Not Applicable
Tripping time of RCD for 30mA leakage current shall be within 300ms.

Comment:

Test / Checked By : REW No.: Grade (Name of CTA Representative)	Name: Ho Tung	Signature:	Date: 21/03/2025
Witnessed By : (Name of JEC Representative)	Name: CHUNG	Signature:	Date: 21/03/2025
Witnessed By : (Name of GCL)	Name: Raymond Lau	Signature:	Date: 21/03/2025
Witnessed By : (Name of AMMSV)	Name: Sam Lui	Signature:	Date: 21/3/2025
Witnessed By : (Name of)	Name:	Signature:	Date:
Witnessed By : (Name of)	Name:	Signature:	Date:

Gammon

CTA INTERNATIONAL AS CLEAN TUNNEL AIR

Air Purification System – HV Power Supply Units Test & Commissioning Report

Contract No.:	HY/2019/13	RISC No.:	32663
Project:	Central Kowloon Route - Buildings, Electrical and Mechanical	Date:	21 March 2025
Location:	YVB / HVB / KVB	Room Name:	Plenum 1
T&C Plan Ref. No:	J3883-TVS-S-06283	Page:	
Ref. Dwg. No.:	J3883-TVS-D-01676, J3883-TVS-D-01762		

Part 3: Inspection and Test for Electrical Installations (Sheet 3 of 5)

D) Functional Test of Residual Current Device (RCD) (TCP Section 4.5.3)

ESP HV Power Supply Cabinets Information

Cabinets ID:	YVB-APS01-ESP-PSC-02	Main Switch Rating:	80A ~~63A~~
Location:	ESP HV Switch Room 01 / 02	Supply Fed From:	YVB-DB-ESP01

Circuit No. or Details of Equipment	Type of Protective Device	Rating	Polarity	RCD 50% (ms)	RCD 100% (ms)	Test Result
1	RCBO	16A SP	P / F / NA	P / F / NA	36.9	P / F / NA
2	RCBO	16A SP	P / F / NA	P / F / NA	36.9	P / F / NA
3	RCBO	16A SP	P / F / NA	P / F / NA	36.0	P / F / NA
4	RCBO	16A SP	P / F / NA	P / F / NA	36.7	P / F / NA
5	RCBO	16A SP	P / F / NA	P / F / NA	37.2	P / F / NA
6	RCBO	16A SP	P / F / NA	P / F / NA	27.2	P / F / NA
7	RCBO	16A SP	P / F / NA	P / F / NA	36.6	P / F / NA
8	RCBO	16A SP	P / F / NA	P / F / NA	36.7	P / F / NA
9	RCBO	16A SP	P / F / NA	P / F / NA	26.5	P / F / NA
10	RCBO	16A SP	P / F / NA	P / F / NA	37.2	P / F / NA

Remark: P / F / NA = Pass / Fail / Not Applicable
Tripping time of RCD for 30mA leakage current shall be within 300ms.

Comment:

Test / Checked By : REW No.: Grade (Name of CTA Representative)	Name: Ho Tung	Signature:	Date: 21/03/2025
Witnessed By : (Name of JEC Representative)	Name: CHEUNG	Signature:	Date: 21/03/2025
Witnessed By : (Name of GCL)	Name: Raymond Lau	Signature:	Date: 21/03/2025
Witnessed By : (Name of AMSU)	Name: Sam Lui	Signature:	Date: 21/3/2025
Witnessed By : (Name of)	Name:	Signature:	Date:
Witnessed By : (Name of)	Name:	Signature:	Date:

Gammon

CTA INTERNATIONAL AS CLEAN TUNNEL AIR

Air Purification System – HV Power Supply Units Test & Commissioning Report			
Contract No.:	HY/2019/13	RISC No.:	32663
Project:	Central Kowloon Route - Buildings, Electrical and Mechanical	Date:	21 March 2025
Location:	YVB / HVB / KVB	Room Name:	Plenum 1
T&C Plan Ref. No:	J3883-TVS-S-06283	Page:	
Ref. Dwg. No.:	J3883-TVS-D-01676, J3883-TVS-D-01762		

Part 3: Inspection and Test for Electrical Installations (Sheet 4 of 5)

E) Functional Test and Circuitry Check (TCP Section 4.5.3)

ESP HV Power Supply Cabinets Information

Cabinets ID:	YVB-APS01-ESP-PSC-01	Main Switch Rating:	80 ~~63A~~
Location:	ESP HV Switch Room 01 / 02	Supply Fed From:	YVB-DB-ESP01

Circuit No. or Details of Equipment	Type of Protective Device	Rating	Isolator	MCB	RCD Test Button	Circuitry Check
1	RCBO	16A SP	P / F / NA	P / F / NA	P / F / NA	P / F / NA
2	RCBO	16A SP	P / F / NA	P / F / NA	P / F / NA	P / F / NA
3	RCBO	16A SP	P / F / NA	P / F / NA	P / F / NA	P / F / NA
4	RCBO	16A SP	P / F / NA	P / F / NA	P / F / NA	P / F / NA
5	RCBO	16A SP	P / F / NA	P / F / NA	P / F / NA	P / F / NA
6	RCBO	16A SP	P / F / NA	P / F / NA	P / F / NA	P / F / NA
7	RCBO	16A SP	P / F / NA	P / F / NA	P / F / NA	P / F / NA
8	RCBO	16A SP	P / F / NA	P / F / NA	P / F / NA	P / F / NA
9	RCBO	16A SP	P / F / NA	P / F / NA	P / F / NA	P / F / NA
10	RCBO	16A SP	P / F / NA	P / F / NA	P / F / NA	P / F / NA
Air conditioner	~~MCB~~ RCBO	16A SP	P / F / NA	P / F / NA	P / F / NA	P / F / NA

Remark: P / F / NA = Pass / Fail / Not Applicable

Comment:

Test / Checked By : REW No.: Grade (Name of CTA Representative)	Name: Ho Ty	Signature:	Date: 21/03/2025
Witnessed By : (Name of JEC Representative)	Name: CHANG	Signature:	Date: 21/03/2025
Witnessed By : (Name of GCL)	Name: Raymond Lau	Signature:	Date: 21/03/2025
Witnessed By : (Name of AMTSU)	Name: Sam Lui	Signature:	Date: 21/3/2025
Witnessed By : (Name of)	Name:	Signature:	Date:
Witnessed By : (Name of)	Name:	Signature:	Date:

Gammon

CTA INTERNATIONAL AS CLEAN TUNNEL AIR

Air Purification System – HV Power Supply Units Test & Commissioning Report			
Contract No.:	HY/2019/13	RISC No.:	32663
Project:	Central Kowloon Route - Buildings, Electrical and Mechanical	Date:	21/03/2025
Location:	YVB / HVB / KVB	Room Name:	Plenum 1
T&C Plan Ref. No:	J3083-TVS-S-06283	Page:	
Ref. Dwg. No.:			

Part 3: Inspection and Test for Electrical Installations (Sheet 4 of 5)

E) Functional Test and Circuitry Check (TCP Section 4.5.3)

ESP HV Power Supply Cabinets Information

Cabinets ID:	YVB-APS01-ESP-PSC-02	Main Switch Rating:	80 ~~63A~~
Location:	ESP HV Switch Room 01 / 02	Supply Fed From:	YVB-DB-ESP01

Circuit No. or Details of Equipment	Type of Protective Device	Rating	Isolator	MCB	RCD Test Button	Circuitry Check
1	RCBO	16A SP	P / F / NA	P / F / NA	P / F / NA	P / F / NA
2	RCBO	16A SP	P / F / NA	P / F / NA	P / F / NA	P / F / NA
3	RCBO	16A SP	P / F / NA	P / F / NA	P / F / NA	P / F / NA
4	RCBO	16A SP	P / F / NA	P / F / NA	P / F / NA	P / F / NA
5	RCBO	16A SP	P / F / NA	P / F / NA	P / F / NA	P / F / NA
6	RCBO	16A SP	P / F / NA	P / F / NA	P / F / NA	P / F / NA
7	RCBO	16A SP	P / F / NA	P / F / NA	P / F / NA	P / F / NA
8	RCBO	16A SP	P / F / NA	P / F / NA	P / F / NA	P / F / NA
9	RCBO	16A SP	P / F / NA	P / F / NA	P / F / NA	P / F / NA
10	RCBO	16A SP	P / F / NA	P / F / NA	P / F / NA	P / F / NA
Air conditioner	RCBO ~~MCB~~	16A SP	P / F / NA	P / F / NA	P / F / NA	P / F / NA

Remark: P / F / NA = Pass / Fail / Not Applicable

Comment:

Test / Checked By : REW No.: Grade (Name of CTA Representative)	Name: Ho Tung	Signature:	Date: 21/03/2025
Witnessed By : (Name of JEC Representative)	Name: CHUNG	Signature:	Date: 21/03/2025
Witnessed By : (Name of GCL)	Name: Raymond Lau	Signature:	Date: 21/03/2025
Witnessed By : (Name of AMNJV)	Name: Sam Lui	Signature:	Date: 21/3/2025
Witnessed By : (Name of)	Name:	Signature:	Date:
Witnessed By : (Name of)	Name:	Signature:	Date:

Gammon

CTA INTERNATIONAL AS

Air Purification System – HV Power Supply Units Test & Commissioning Report			
Contract No.:	HY/2019/13	RISC No.:	32663A
Project:	Central Kowloon Route - Buildings, Electrical and Mechanical	Date:	9/10/2025
Location:	YVB / HVB / KVB	Room Name:	HV Switch Rm 01
T&C Plan Ref. No:		Page:	
Ref. Dwg. No.:			

Part 3: Inspection and Test for Electrical Installations (Sheet 1 of 5)

A) Continuity Test of ESP DC Earthing Conductor and 0V conductor (TCP Section 4.5.3)

Location: ESP HV Switch Room 01 / 02

	Circuit No. or Details of Equipment	Continuity of Conductor (ohm)	Test Result
	APS 1 - PSC01		
1	1L1	0.03	P / F / NA
2	2L1	0.02	P / F / NA
3	3L1	0.02	P / F / NA
4	4L1	0.02	P / F / NA
5	1L2	0.03	P / F / NA
6	2L2	0.01	P / F / NA
7	3L2	0.02	P / F / NA
8	4L2	0.03	P / F / NA
9	1L3	0.02	P / F / NA
10	2L3	0.04	P / F / NA
			P / F / NA

Remark: P / F / NA = Pass / Fail / Not Applicable
The Passing Criteria for Reading of Continuity test should be <1Ω

Comment:

Test / Checked By : REW No.: W133567 Grade B+H (Name of CTA Representative)	Name: Ho Tung	Signature: Ho Tung	Date: 9/10/25
Witnessed By : (Name of JEC Representative)	Name: Chung Kp	Signature: C	Date: 9/10/25
Witnessed By : (Name of GCL)	Name: Gang Kwp	Signature: Gang Kwp	Date: 9/10/25
Witnessed By : (Name of AMNJV)	Name: Andy Tang	Signature: Andy Tang	Date: 9/10/25
Witnessed By : (Name of)	Name:	Signature:	Date:
Witnessed By : (Name of)	Name:	Signature:	Date:

Gammon

CTA INTERNATIONAL AS

Air Purification System – HV Power Supply Units Test & Commissioning Report			
Contract No.:	HY/2019/13	RISC No.:	SI/32663A
Project:	Central Kowloon Route - Buildings, Electrical and Mechanical	Date:	9/10/2025
Location:	YVB / HVB / KVB	Room Name:	ESP HV Switch Rm 01
T&C Plan Ref. No:		Page:	
Ref. Dwg. No.:			

Part 3: Inspection and Test for Electrical Installations (Sheet 1 of 5)

A) Continuity Test of ESP DC Earthing Conductor and 0V conductor (TCP Section 4.5.3)

Location: ESP HV Switch Room 01 / 02

Circuit No. or Details of Equipment	Continuity of Conductor (ohm)	Test Result
APS1 - PSC02		
1L1	0.03	P / F / NA
2L1	0.02	P / F / NA
3L1	0.01	P / F / NA
4L1	0.02	P / F / NA
1L2	0.02	P / F / NA
2L2	0.03	P / F / NA
3L2	0.01	P / F / NA
4L2	0.03	P / F / NA
1L3	0.02	P / F / NA
2L3	0.02	P / F / NA
		P / F / NA

Remark: P / F / NA = Pass / Fail / Not Applicable
The Passing Criteria for Reading of Continuity test should be <1Ω

Comment:

	Name:	Signature:	Date:
Test / Checked By : REW No.: W133567 Grade B+H1 (Name of CTA Representative)	Ho Tung	Ho Tung	9/10/2025
Witnessed By : (Name of JEC Representative)	Chung Kp	[illegible]	9/10/2025
Witnessed By : (Name of GCL)	Geng Kap	Geng Kap	9/10/2025
Witnessed By : (Name of AMMJV)	Andy Tang	[illegible]	9/10/2025
Witnessed By : (Name of)			
Witnessed By : (Name of)			

Gammon

CTA INTERNATIONAL AS

Air Purification System – HV Power Supply Units Test & Commissioning Report			
Contract No.:	HY/2019/13	RISC No.:	32663A
Project:	Central Kowloon Route - Buildings, Electrical and Mechanical	Date:	9/10/2025
Location:	YVB / HVB / KVB	Room Name:	HV Switch Rm 1
T&C Plan Ref. No:		Page:	
Ref. Dwg. No.:			

Part 3: Inspection and Test for Electrical Installations (Sheet 1 of 5)

A) Continuity Test of ESP DC Earthing Conductor and 0V conductor (TCP Section 4.5.3)

Location: ESP HV Switch Room 01 / 02 (Ho Tung)

Circuit No. or Details of Equipment	Continuity of Conductor (ohm)	Test Result
CABLE TRAY AT APS1	0.05	P / F / NA
PSU CABINET 1	0.04	P / F / NA
		P / F / NA
CABLE TRAY AT APS3	0.07	P / F / NA
PSU CABINET 3	0.05	P / F / NA
		P / F / NA
		P / F / NA
		P / F / NA
		P / F / NA
		P / F / NA
		P / F / NA

Remark: P / F / NA = Pass / Fail / Not Applicable
The Passing Criteria for Reading of Continuity test should be <1Ω

Comment:

Test / Checked By : REW No.: W133567 Grade B+H (Name of CTA Representative)	Name: Ho Tung	Signature: Ho Tung	Date: 9/10/25
Witnessed By : (Name of JEC Representative)	Name: Chung Ip	Signature: C	Date: 9/10/25
Witnessed By : (Name of Gel)	Name: Gang Exp	Signature: Gang Exp.	Date: 9/10/25
Witnessed By : (Name of AMMJV)	Name: Andy Tang	Signature: Andy Tang	Date: 9/10/25
Witnessed By : (Name of)	Name:	Signature:	Date:
Witnessed By : (Name of)	Name:	Signature:	Date:

Gammon

CTA INTERNATIONAL AS CLEAN TUNNEL AIR

Air Purification System – HV Power Supply Units Test & Commissioning Report			
Contract No.:	HY/2019/13	RISC No.:	32663A
Project:	Central Kowloon Route - Buildings, Electrical and Mechanical	Date:	9/10/2025
Location:	YVB / HVB / KVB	Room Name:	ESP HV Switch Rm 1
T&C Plan Ref. No:		Page:	
Ref. Dwg. No.:			

Part 3: Inspection and Test for Electrical Installations (Sheet 5 of 5)

E) Bonding Continuity Test

Equipment Description	Equipotential Bonding (Ω)	Supplementary Bonding (Ω)	Test Result
OV AT APS 1	0.12		P / F / NA
ESP DC EARTH AT	0.12		P / F / NA
APS 1			P / F / NA
			P / F / NA
OV AT APS 3	0.12		P / F / NA
ESP DC EARTH AT	0.12		P / F / NA
APS 3			P / F / NA
			P / F / NA
Ho Tung FENCING WALL		0.05	P / F / NA
AT ESP APS HV			P / F / NA
ROOM 1			P / F / NA
			P / F / NA
			P / F / NA
			P / F / NA
			P / F / NA

Remark: P / F / NA = Pass / Fail / Not Applicable
The Passing Criteria of the Reading of Continuity test should be <1Ω.

Comment:

	Name:	Signature:	Date:
Test / Checked By : REW No.: W133567 Grade B+H (Name of CTA Representative)	Ho Tung	Ho Tung	9/10/25
Witnessed By : (Name of JEC Representative)	Chung Kp		9/10/25
Witnessed By : (Name of GEL)	Gong Kp	Gong Kp	9/10/25
Witnessed By : (Name of AMMJV)	Andy Tang	Andy Tang	9/10/25
Witnessed By : (Name of)			
Witnessed By : (Name of)			

Gammon

CTA INTERNATIONAL AS

Air Purification System – HV Power Supply Units Test & Commissioning Report			
Contract No.:	HY/2019/13	RISC No.:	32048
Project:	Central Kowloon Route - Buildings, Electrical and Mechanical	Date:	21/03/2025
Location:	YVB / ~~HVB / KVB~~	Room Name:	HV Room 1
T&C Plan Ref. No:	J3883-TVS-S-06283	Page:	
Ref. Dwg. No.:			

Part 3: Inspection and Test for Electrical Installation of ESP Filter (TCP Section 4.5)

Statutory Inspection and Test for LV and HV DC Installation (Sheet 2 of 10)

Items	Description of Inspection	Test Result
B)	**Visual Inspection (ASD TCP-EE, COP Code 21A & C and COP Appendix 13) - Distribution Board (L.V.)**	
a.	No visible damage to impair safety	P / F / NA
b.	No fuse installed in the neutral circuit.	P / F / NA
c.	All live parts screened with an insulating plate or earthed metal	P / F / NA
d.	All exposed metal parts effectively earthed.	P / F / NA
e.	A warning notice 'DANGER' and '危險' provided on the front panel of every distribution board.	P / F / NA
f.	A notice of periodic testing provided at or near the main distribution board incorporating a residual current device.	P / F / NA
g.	Safe access & adequate clearance space provided in compliance with EMSD CoP Code 4E.	P / F / NA
h.	Distribution boards securely mounted on suitable supports.	P / F / NA
i.	A suitable switch provided to control each distribution board.	P / F / NA
j.	Phase Identification for distribution board provided.	P / F / NA
k.	Check the breaking capacity of MCB / RCBO (6kA) in compliance with EMSD CoP Code 9.	P / F / NA
l.	Circuits connected to MCB / RCBO in accordance with the schematic diagram.	P / F / NA

Remark: P / F / NA = Pass / Fail / Not Applicable

Comment:

Test / Checked By : REW No.: Grade (Name of CTA Representative)	Name: Ho Tung	Signature: Ho Tung	Date: 21/03/2025
Witnessed By : (Name of JEC Representative)	Name: CHUNG	Signature:	Date: 21/03/2025
Witnessed By : (Name of GCL)	Name: Raymond Lau	Signature:	Date: 21/03/2025
Witnessed By : AMMJV (Name of)	Name: Eric Tang	Signature:	Date: 21/3/25
Witnessed By : (Name of)	Name:	Signature:	Date:
Witnessed By : (Name of)	Name:	Signature:	Date:

Gammon

CTA INTERNATIONAL AS CLEAN TUNNEL AIR

Air Purification System – HV Power Supply Units Test & Commissioning Report			
Contract No.:	HY/2019/13	RISC No.:	32048
Project:	Central Kowloon Route - Buildings, Electrical and Mechanical	Date:	21/03/2025
Location:	YVB / ~~HVB / KVB~~	Room Name:	HV Room 1
T&C Plan Ref. No:	J3883-TVS-S-06283	Page:	
Ref. Dwg. No.:			

Part 3: Inspection and Test for Electrical Installation of ESP Filter (TCP Section 4.5)

Statutory Inspection and Test for LV and HV DC Installation (Sheet 3 of 10)

Items	Description of Inspection	Test Result
C) Visual Inspection (ASD TCP-EE, COP Code 21A & C and COP Appendix 13) - Conductors, Cables and Wirings (L.V.)		
a.	No visible damage to impair safety.	P / F / NA
b.	All live conductors and their methods of insulation, in relation to design currents of circuits and to the operating currents of the protective devices, are properly selected and erected.	P / F / NA
c.	All cables, flexible cords, switches, plugs and socket outlets, accessories and equipment are found to be in good working conditions.	P / F / NA
d.	All conductors are correctly and securely connected and identified.	P / F / NA
e.	Armoured cables properly terminated by proper cable glands.	P / F / NA
f.	Non-sheathed cables protected by conduit, trunking, ducting or approved mechanical protective means.	P / F / NA
g.	Cables and cable containments, such as tray, ladder, ducting, trunking, conduit, etc., adequately supported.	P / F / NA
h.	Suitable cable lugs used for terminating cables, including termination at distribution board.	P / F / NA
i.	Main cables connected up with correct polarity.	P / F / NA
j.	Cables protected against mechanical damage and suitably supported.	P / F / NA
k.	All exposed metal parts including the armour effectively earthed.	P / F / NA
Remark: P / F / NA = Pass / Fail / Not Applicable		
Comment:		

Test / Checked By : REW No.: Grade (Name of CTA Representative)	Name: Ho Tung	Signature: Ho Tung	Date: 21/03/2025
Witnessed By : (Name of JEC Representative)	Name: CHUNG	Signature:	Date: 21/03/2025
Witnessed By : (Name of GCL)	Name: Raymond Lau	Signature:	Date: 21/03/2025
Witnessed By : AMMJV (Name of)	Name: Eric Tang	Signature:	Date: 21/03/25
Witnessed By : (Name of)	Name:	Signature:	Date:
Witnessed By : (Name of)	Name:	Signature:	Date:

Gammon

CTA INTERNATIONAL AS CLEAN TUNNEL AIR

Air Purification System – HV Power Supply Units Test & Commissioning Report			
Contract No.:	HY/2019/13	RISC No.:	32048
Project:	Central Kowloon Route - Buildings, Electrical and Mechanical	Date:	21/03/2025
Location:	YVB ~~/ HVB / KVB~~	Room Name:	HV Room 1
T&C Plan Ref. No:	J3883-TVS-S-06283	Page:	
Ref. Dwg. No.:			

Part 3: Inspection and Test for Electrical Installation of ESP Filter (TCP Section 4.5)

Statutory Inspection and Test for LV and HV DC Installation (Sheet 4 of 10)

Items	Description of Inspection	Test Result
D)	**Visual Inspection (ASD TCP-EE, COP Code 21A and COP Appendix 13) - Final Circuits (L.V.)**	
a.	No visible damage to impair safety	P / F / NA
b.	All non-armoured cables susceptible to damage protected with steel conduit / trunking Bushing and rubber gromment, where necessary, provided.	P / F / NA
c.	Conductor sized to suit the rating of the fuse/ MCB protecting the circuit.	P / F / NA
d.	No cable joint in final circuit.	P / F / NA
e.	All joints of metal conduits or trunking to be mechanically sound, electrically continuous and protected against corrosion.	P / F / NA
f.	All metal conduits, trunking, switch boxes and exposed metal parts effectively earth.	P / F / NA
g.	Earth fault loop impedance and polarities of every outlet checked.	P / F / NA
h.	All fuses and single/double pole switches connected to the phase conductors only with correct polarity.	P / F / NA
i.	Low voltage circuits segregated from extra low voltage circuits.	P / F / NA
j.	Exposed insulated non-sheathed cables with mechanically protected.	P / F / NA
k.	No 2-pin sockets installed. All socket outlets connected with protective conductors and live conductors terminated at correct terminals.	P / F / NA

Remark: P / F / NA = Pass / Fail / Not Applicable

Comment:

Test / Checked By : REW No.: Grade (Name of CTA Representative)	Name: Ho Tung	Signature: Ho Tung	Date: 21/03/2025
Witnessed By : (Name of JEC Representative)	Name: CHUNG	Signature:	Date: 21/03/2025
Witnessed By : (Name of GCL)	Name: Raymond Lau	Signature:	Date: 21/03/2025
Witnessed By : AMMJV (Name of)	Name: Eric Tang	Signature:	Date: 21/03/25
Witnessed By : (Name of)	Name:	Signature:	Date:
Witnessed By : (Name of)	Name:	Signature:	Date:

Gammon

CTA INTERNATIONAL AS CLEAN TUNNEL AIR

Air Purification System – HV Power Supply Units Test & Commissioning Report			
Contract No.:	HY/2019/13	RISC No.:	32048
Project:	Central Kowloon Route - Buildings, Electrical and Mechanical	Date:	21/03/2025
Location:	YVB ~~/ HVB / KVB~~	Room Name:	HV Room 1
T&C Plan Ref. No:	J3883-TVS-S-06283	Page:	
Ref. Dwg. No.:			

Part 3: Inspection and Test for Electrical Installation of ESP Filter (TCP Section 4.5)

Statutory Inspection and Test for LV and HV DC Installation (Sheet 5 of 10)

Items	Description of Inspection	Test Result
E) Visual Inspection (ASD TCP-EE, COP Code 21A and COP Appendix 13) - Final Circuits (L.V.)		
l.	Final circuits using 13A socket outlets in compliance with EMSD Code 6E.	P / F / NA
m.	Where circuit protective conductor is formed by the metallic cable containment enclosure, a separate protective conductor between the earthing terminal of socket outlet and its associated metal box being provided.	P / F / NA
n.	Where circuit protective conductor is not formed by the metallic cable containment enclosure, a separate protective conductor to the earthing terminal of socket outlet being provided.	P / F / NA
o.	Residual current device having a rated residual operating current not exceeding 30mA provided for all socket outlets.	P / F / NA
p.	Minimum sizes of protective conductors are provided as per requirement in EMSD COP Code 11 for limitation of protective conductor impedance.	P / F / NA
q.	Means of isolation provided for every fixed appliance.	P / F / NA

Remark: P / F / NA = Pass / Fail / Not Applicable

Comment:

Test / Checked By : REW No.: Grade (Name of CTA Representative)	Name: Ho Tung	Signature: Ho Tung	Date: 21/03/2025
Witnessed By : (Name of JEC Representative)	Name: CHUNG	Signature:	Date: 21/03/2025
Witnessed By : (Name of GCL)	Name: Raymond Lau	Signature:	Date: 21/03/2025
Witnessed By : AMTOV (Name of)	Name: Eric Tang	Signature:	Date: 21/03/25
Witnessed By : (Name of)	Name:	Signature:	Date:
Witnessed By : (Name of)	Name:	Signature:	Date:

Gammon

CIA INTERNATIONAL AS CLEAR TUNNEL AIR

Air Purification System – HV Power Supply Units Test & Commissioning Report			
Contract No.:	HY/2019/13	RISC No.:	32048
Project:	Central Kowloon Route - Buildings, Electrical and Mechanical	Date:	21/03/2025
Location:	YVB / ~~HVB / KVB~~	Room Name:	HV Room 1
T&C Plan Ref. No:	J3883-TVS-S-06283	Page:	
Ref. Dwg. No.:			

Part 3: Inspection and Test for Electrical Installation of ESP Filter (TCP Section 4.5)

Statutory Inspection and Test for LV and HV DC Installation (Sheet 6 of 10)

Items	Description of Inspection	Test Result
F)	**Visual Inspection (ASD TCP-EE, COP Code 21A&C and COP Appendix 13) - Earthing and Bonding (L.V.)**	
a.	No visible damage to impair safety.	P / F / NA
b.	All exposed conductive parts of the wiring installation connected to the earthing terminal with appropriate protective conductor.	P / F / NA
c.	Minimum size of protective conductor used in compliance with EMSD CoP Table 11(1).	P / F / NA
d.	Protective conductor up to and including 6mm2 with green and yellow insulation sheath used throughout its length.	P / F / NA
e.	Copper links provided at joints of metallic trunking, forms part of a protective conductor	P / F / NA
f.	A warning notice 'SAFETY ELECTRICAL CONNECTION—DO NOT REMOVE and '安全接地 終端——切勿移去' provided at all main earthing and bonding connections.	P / F / NA
g.	Supplementary equipotential bonding effectively provided between exposed conductive parts and extraneous conductive parts.	P / F / NA
h.	Exposed conductive parts of fixed equipment installed outside equipotential zone effectively earthed for 0.4 sec. disconnection.	P / F / NA
i.	Exposed conductive parts of fixed equipment installed within equipotential zone effectively earthed for 5 sec. disconnection.	P / F / NA
j.	Effectiveness of the main equipotential bonding connection to the main earthing terminal.	P / F / NA
k.	Earthing conductors of adequate size.	P / F / NA
Remark:	P / F / NA = Pass / Fail / Not Applicable	
Comment:		

Test / Checked By : REW No.: Grade (Name of CTA Representative)	Name: Ho Tung	Signature: Ho Tung	Date: 21/03/2025
Witnessed By : (Name of JEC Representative)	Name: CHUNG	Signature:	Date: 21/03/2025
Witnessed By : (Name of GCL)	Name: Raymond Lau	Signature:	Date: 21/03/2025
Witnessed By : AMMJV (Name of)	Name: Eric Tang	Signature:	Date: 21/03/25
Witnessed By : (Name of)	Name:	Signature:	Date:
Witnessed By : (Name of)	Name:	Signature:	Date:

Gammon

CTA INTERNATIONAL AS CLEAN TUNNEL AIR

Air Purification System – HV Power Supply Units Test & Commissioning Report			
Contract No.:	HY/2019/13	RISC No.:	32048
Project:	Central Kowloon Route - Buildings, Electrical and Mechanical	Date:	21/03/2025
Location:	YVB ~~/ HVB / KVB~~	Room Name:	HV Room 1
T&C Plan Ref. No:	J3883-TVS-S-06283	Page:	
Ref. Dwg. No.:			

Part 3: Inspection and Test for Electrical Installation of ESP Filter (TCP Section 4.5)

Statutory Inspection and Test for LV and HV DC Installation (Sheet 7 of 10)

Items	Description of Inspection	Test Result
G) Conductor Continuity (ASD TCP-EE, COP Code 21B(3) and (4))		
a.	All protective conductors used for equipotential bonding have been tested for continuity.	P / F / NA
b.	All final ring circuit conductors including the protective conductors have been tested for continuity.	P / F / NA
c.	Conductor continuity test results recorded in **relevant Test Form.**	P / F / NA

Remark: P / F / NA = Pass / Fail / Not Applicable

Comment:

Test / Checked By : REW No.: Grade (Name of CTA Representative)	Name: Ho Tung	Signature: Ho Tung	Date: 21/03/2025
Witnessed By : (Name of JEC Representative)	Name: CHUNG TP	Signature:	Date: 21/03/2025
Witnessed By : (Name of GCL)	Name: Raymond Lau	Signature:	Date: 21/03/2025
Witnessed By : AMMGV (Name of)	Name: Eric Tang	Signature:	Date: 21/03/25
Witnessed By : (Name of)	Name:	Signature:	Date:
Witnessed By : (Name of)	Name:	Signature:	Date:

Gammon

CTA INTERNATIONAL AS CLEAN TUNNEL AIR

Air Purification System – HV Power Supply Units Test & Commissioning Report			
Contract No.:	HY/2019/13	RISC No.:	32048
Project:	Central Kowloon Route - Buildings, Electrical and Mechanical	Date:	21/03/2025
Location:	YVB / ~~HVB / KVB~~	Room Name:	HV Room 1
T&C Plan Ref. No:	J3883-TVS-S-06283	Page:	
Ref. Dwg. No.:			

Part 3: Inspection and Test for Electrical Installation of ESP Filter (TCP Section 4.5)

Statutory Inspection and Test for LV and HV DC Installation (Sheet 8 of 10)

Items	Description of Inspection	Test Result
H)	**Insulation Resistance (ASD TCP-EE, COP Code 21B(5))**	
a.	The insulation resistance to earth is NOT less than 1 mega ohm.	P / F / NA
b.	The insulation resistance between phase/poles is NOT less than 1 mega ohm.	P / F / NA
c.	The insulation resistance of equipment between the exposed conductive parts and all live parts is NOT less than 1 mega ohm when tested individually and separately (EMSD COP Code 21B(5)(f)).	P / F / NA
d.	Insulation resistance test results recorded in **relevant Test Form.**	P / F / NA

Remark: P / F / NA = Pass / Fail / Not Applicable

Comment:

Test / Checked By : REW No.: Grade (Name of CTA Representative)	Name: Ho Tung	Signature: Ho Tung	Date: 21/03/2025
Witnessed By : (Name of JEC Representative)	Name: CHEUNG ZP	Signature:	Date: 21/03/2025
Witnessed By : (Name of GCL)	Name: Raymond Lau	Signature:	Date: 21/03/2025
Witnessed By : AMMJV (Name of)	Name: Eric Tong	Signature:	Date: 21/03/25
Witnessed By : (Name of)	Name:	Signature:	Date:
Witnessed By : (Name of)	Name:	Signature:	Date:

Gammon

CTA INTERNATIONAL AS OCEAN TUNNEL AIR

Air Purification System – HV Power Supply Units Test & Commissioning Report			
Contract No.:	HY/2019/13	RISC No.:	32048
Project:	Central Kowloon Route - Buildings, Electrical and Mechanical	Date:	21/03/2025
Location:	YVB ~~/ HVB / KVB~~	Room Name:	HV Room 1
T&C Plan Ref. No:	J3883-TVS-S-06283	Page:	
Ref. Dwg. No.:			

Part 3: Inspection and Test for Electrical Installation of ESP Filter (TCP Section 4.5)

Statutory Inspection and Test for LV and HV DC Installation (Sheet 9 of 10)

Items	Description of Inspection	Test Result
I) Polarity (ASD TCP-EE, COP Code 21B(6))		
a.	All fuses and single-poles devices are connected in the phase conductors only.	P / F / NA
b.	All wiring has been correctly connected to socket outlets and, etc.	P / F / NA
c.	Polarity Check results recorded in **relevant Test Form.**	P / F / NA

Remark: P / F / NA = Pass / Fail / Not Applicable

Comment:

Test / Checked By : REW No.: Grade (Name of CTA Representative)	Name: Ho Tung	Signature: Ho Tung	Date: 21/03/2025
Witnessed By : (Name of JEC Representative)	Name: CHUNG YP	Signature:	Date: 21/03/2025
Witnessed By : (Name of GCL)	Name: Raymond Lau	Signature:	Date: 21/03/2025
Witnessed By : AMMJV (Name of)	Name: Eric Tang	Signature:	Date: 21/03/25
Witnessed By : (Name of)	Name:	Signature:	Date:
Witnessed By : (Name of)	Name:	Signature:	Date:

Gammon

CTA INTERNATIONAL AS CLEAN TUNNEL AIR

Air Purification System – HV Power Supply Units Test & Commissioning Report			
Contract No.:	HY/2019/13	RISC No.:	32048
Project:	Central Kowloon Route - Buildings, Electrical and Mechanical	Date:	21/03/2025
Location:	YVB / ~~HVB / KVB~~	Room Name:	HV Room 1
T&C Plan Ref. No:	J3883-TVS-S-06283	Page:	
Ref. Dwg. No.:			

Part 3: Inspection and Test for Electrical Installation of ESP Filter (TCP Section 4.5)

Statutory Inspection and Test for LV and HV DC Installation (Sheet 10 of 10)

Items	Description of Inspection	Test Result
J) Functional Testing of All Devices Including Protective Devices (ASD TCP-EE, COP Code 21B(9))		
a.	Simulation tests on the operation of devices for earth fault protection are satisfactory.	P / F / NA
b.	50% of the rated tripping current shall not cause the residual current circuit breaker to open.	P / F / NA
c.	100% of the rated tripping current shall cause the residual current circuit breaker to open within 300ms or at any delay time declared by the manufacture of the devices.	P / F / NA
d.	Where the residual current circuit breaker has a rated tripping current not exceeding 30mA and has been installed to reduce the risk associated with direct contact, a residual current of 150mA should cause the circuit breaker to open within 40ms.	P / F / NA
e.	In no event should the test current be applied for a period exceeding one second	P / F / NA
f.	Breakers, moulded case circuit breakers, air circuit breakers, fused switches, switch-fuses and protective relays, etc. are satisfactory.	P / F / NA
g.	Hand operation on all items of equipment such as isolators, switch and protective relays, etc. are satisfactory.	P / F / NA
h.	Hand operation on all items of equipment such as isolators, switches and indicative devices are satisfactory.	P / F / NA
i.	Functional test of all devices including protective devices had been recorded in **relevant Test Form.**	P / F / NA
Remark: P / F / NA = Pass / Fail / Not Applicable		
Comment:		

Test / Checked By : REW No.: Grade (Name of CTA Representative)	Name: Ho Tung	Signature: Ho Tung	Date: 21/03/2025
Witnessed By : (Name of JEC Representative)	Name: CHUNG IP	Signature:	Date: 21/03/2025
Witnessed By : (Name of GCL)	Name: Raymond Lau	Signature:	Date: 21/03/2025
Witnessed By : AMMGV (Name of)	Name: Eric Tang	Signature:	Date: 21/03/25
Witnessed By : (Name of)	Name:	Signature:	Date:
Witnessed By : (Name of)	Name:	Signature:	Date:

Gammon

CTA INTERNATIONAL AS CLEAN TUNNEL AIR

Air Purification System – HV Power Supply Units Test & Commissioning Report			
Contract No.:	HY/2019/13	RISC No.:	35277
Project:	Central Kowloon Route - Buildings, Electrical and Mechanical	Date:	16/4/2025
Location:	YVB / HVB / KVB	Room Name:	APS Plenum 1
T&C Plan Ref. No:		Page:	
Ref. Dwg. No.:			

Part 4 : Functional and Performance Tests for HV Power Supply Units (Sheet 1 of 5)

A) Maximum Voltage Withstand Test for ESP Cell (TCP Section 4.6.1) 1 2 3 4 5

From:	ESP HV Switch Room 01 / 02	To:	APS Plenum No. 01 / 02 / 03 Sub-assembly A / B / C / D / E

Step 1 & 3 - Insulation Resistance Test before and after the Maximum Voltage Withstand Test

Items	Circuit No. or Details of Equipment	Insulation Resistance (MΩ)	
		Before Max. Withstand Tests	After Max. Withstand Tests
1	(1st Col. Ionizer to Earth)	203 (Lower 3 ESP Cell) / 205 (Upper 3 ESP Cell)	134 (Lower 3 ESP Cell) / 68.9 (Upper 3 ESP Cell)
2	(2nd Col. Ionizer to Earth)	208 (Lower 3 ESP Cell) / 207 (Upper 3 ESP Cell)	128 (Lower 3 ESP Cell) / 77.4 (Upper 3 ESP Cell)
3	(3rd Col. Ionizer to Earth)	235 (Lower 3 ESP Cell) / 218 (Upper 3 ESP Cell)	197 (Lower 3 ESP Cell) / 87.5 (Upper 3 ESP Cell)
4	(1st to 3rd Col. Collector the Earth)	77.6 (1st Col.) / 78.6 (2nd Col.) / 119 (3rd Col.)	74.8 (1st Col.) / 69.1 (2nd Col.) / 175 (3rd Col.)

Step 2 - Maximum Voltage Withstand Test

Items	Test Voltage (kV DC)	Duration (min)	Measured Voltage (kV DC) Upper / Lower	Test Result
1	20 (Ionizer)	1	19.99 / 19.61	P / F / NA
2	20 (Ionizer)		19.73 / 19.75	P / F / NA
3	20 (Ionizer)		19.57 / 19.92	P / F / NA
4	8 (Collector)	1	7.22	P / F / NA

B) List of Testing Equipment / Instruments

Type	Model	Serial No	Calibration Cert. No	Date of Cert.
HV Insulation Tester	AR3125	6819355	KS2S2502127800001	26/02/2025
HV DC Voltage Meter	HVP-40DM	20240071	AC220250503080 1	03/03/2025

Remark: P / F / NA = Pass / Fail / Not Applicable
The passing criteria for the test is passing the insulation test after for maximum voltage withstand test.
The insulation resistance is over 1000MOhm (*) for HV DC Cable and 30MOhm for ESP Cell

Comment:

	Name:	Signature:	Date:
Test / Checked By : REW No.: Grade (Name of CTA Representative)	Ho Tung		16/4/2025
Witnessed By : (Name of JEC Representative)	Lucy Li		16/4/2025
Witnessed By : (Name of BCL)	Crystal Cheung		16/4/2025
Witnessed By : (Name of AMSU)	Sam Lui		16/4/2025
Witnessed By : (Name of)			
Witnessed By : (Name of)			

~~Before~~ ~~After~~
~~Lower~~ ~~Upper~~
~~1st Col. 30.2~~
~~2nd Col.~~
~~3rd Col. 31.6~~

NA

Gammon

CTA INTERNATIONAL AS

Air Purification System – HV Power Supply Units Test & Commissioning Report			
Contract No.:	HY/2019/13	RISC No.:	35297
Project:	Central Kowloon Route - Buildings, Electrical and Mechanical	Date:	16/4/2025
Location:	(KVB) / HVB / KVB	Room Name:	APS Plenum 1
T&C Plan Ref. No:		Page:	
Ref. Dwg. No.:			

Part 4 : Functional and Performance Tests for HV Power Supply Units (Sheet 1 of 5)

A) Maximum Voltage Withstand Test for ESP Cell (TCP Section 4.6.1) 1 (2) 3 4 5

From:	ESP HV Switch Room (01) / 02	To:	APS Plenum No (01) / 02 / 03 Sub-assembly A / (B) / C / D / E

Step 1 & 3 - Insulation Resistance Test before and after the Maximum Voltage Withstand Test

Items	Circuit No. or Details of Equipment	Insulation Resistance (MΩ)	
		Before Max. Withstand Tests	After Max. Withstand Tests
1	(1st Col. Ionizer to Earth)	204 (Lower 3 ESP Cell) / 228 (Upper 3 ESP Cell)	71.1 (Lower 3 ESP Cell) / 88.2 (Upper 3 ESP Cell)
2	(2nd Col. Ionizer to Earth)	211 (Lower 3 ESP Cell) / 223 (Upper 3 ESP Cell)	169 (Lower 3 ESP Cell) / 89.3 (Upper 3 ESP Cell)
3	(3rd Col. Ionizer to Earth)	216 (Lower 3 ESP Cell) / 227 (Upper 3 ESP Cell)	188 (Lower 3 ESP Cell) / 87.4 (Upper 3 ESP Cell)
4	(1st to 3rd Col. Collector the Earth)	42.31 (1st Col.) 87.6 (2nd Col.) / 51.4 (3rd Col.)	49 (1st Col.) / 87.8 (2nd Col.) / 52.5 (3rd Col.)

Step 2 - Maximum Voltage Withstand Test

Items	Test Voltage (kV DC)	Duration (min)	Measured Voltage (kV DC) Upper	Measured Voltage (kV DC) Lower	Test Result
1	20 (Ionizer)	1	19.61	19.82	(P) / F / NA
2	20 (Ionizer)		19.73	19.97	(P) / F / NA
3	20 (Ionizer)		~~19.02~~	20.04 20.03	(P) / F / NA
4	8 (Collector)	1	7.22		(P) / F / NA

B) List of Testing Equipment / Instruments

Type	Model	Serial No	Calibration Cert. No	Date of Cert.
HV Insulation Tester	AR3125	6819355	KS2525021278D001	26/02/2025
HV DC Voltage Meter	HVP-40DM	20240071	ACZ20250503080 1	03/03/2025

Remark: P / F / NA = Pass / Fail / Not Applicable
The passing criteria for the test is passing the insulation test after for maximum voltage withstand test.
The insulation resistance is over 1000MOhm (*) for HV DC Cable and 30MOhm for ESP Cell

Comment:

	Name:	Signature:	Date:
Test / Checked By : REW No.: Grade (Name of CTA Representative)	Ho Tung		16/4/2025
Witnessed By : (Name of JEC Representative)	Lucy Li		16/4/2025
Witnessed By : (Name of BCL)	Crystal Cheung		16/4/2025
Witnessed By : (Name of AMJV)	Sam Lui		16/4/2025
Witness By : (Name of)			
Witness By : (Name of)			

~~Before~~ ~~After~~

~~Lower Upper Lower Upper~~

~~1st Col.~~

~~2nd Col.~~

~~3rd Col.~~

NA

Gammon

CTA INTERNATIONAL AS

Air Purification System – HV Power Supply Units Test & Commissioning Report			
Contract No.:	HY/2019/13	RISC No.:	35237
Project:	Central Kowloon Route - Buildings, Electrical and Mechanical	Date:	16/4/2025
Location:	YVB / HVB / KVB	Room Name:	APS Plenum 1
T&C Plan Ref. No:		Page:	
Ref. Dwg. No.:			

Part 4 : Functional and Performance Tests for HV Power Supply Units (Sheet 1 of 5)

A) Maximum Voltage Withstand Test for ESP Cell (TCP Section 4.6.1) 1 2 3 4 5

From:	ESP HV Switch Room 01 / 02	To:	APS Plenum No 01 / 02 / 03 Sub-assembly A / B / C / D / E

Step 1 & 3 - Insulation Resistance Test before and after the Maximum Voltage Withstand Test

Items	Circuit No. or Details of Equipment	Insulation Resistance (MΩ) Before Max. Withstand Tests	Insulation Resistance (MΩ) After Max. Withstand Tests
1	(1st Col. Ionizer to Earth)	202 (Lower 3 ESP Cell) / 219 (Upper 3 ESP Cell)	111 (Lower 3 ESP Cell) / 84.1 (Upper 3 ESP Cell)
2	(2nd Col. Ionizer to Earth)	203 (Lower 3 ESP Cell) / 228 (Upper 3 ESP Cell)	71.4 (Lower 3 ESP Cell) / 99.7 (Upper 3 ESP Cell)
3	(3rd Col. Ionizer to Earth)	214 (Lower 3 ESP Cell) / 215 (Upper 3 ESP Cell)	126 (Lower 3 ESP Cell) / 80 (Upper 3 ESP Cell)
4	(1st to 3rd Col. Collector the Earth)	59.1 (1st Col.) / 88.2 (2nd Col.) / ~~33.4~~ 75.9 (3rd Col.)	63.5 (1st Col.) / 90.4 (2nd Col.) / 68.7 (3rd Col.)

Step 2 - Maximum Voltage Withstand Test

Items	Test Voltage (kV DC)	Duration (min)	Measured Voltage (kV DC)	Test Result
1	20 (Ionizer)	1	Upper 19.59 Lower 19.76	(P) / F / NA
2	20 (Ionizer)		19.92 19.97	(P) / F / NA
3	20 (Ionizer)		19.86 19.84	(P) / F / NA
4	8 (Collector)	1	7.22	(P) / F / NA

B) List of Testing Equipment / Instruments

Type	Model	Serial No	Calibration Cert. No	Date of Cert.
HV insulation tester	AR 3125	6819355	KS2525021278D001	26/02/2025
HV DC Voltage Meter	HVP-40DM	20240071	AC2202503030801	03/03/2025

Remark: P / F / NA = Pass / Fail / Not Applicable
The passing criteria for the test is passing the insulation test after for maximum voltage withstand test.
The insulation resistance is over 1000MOhm (*) for HV DC Cable and 30MOhm for ESP Cell

Comment:

	Name:	Signature:	Date:
Test / Checked By : REW No.: Grade (Name of CTA Representative)	Ho Tung		16/4/2025
Witnessed By : (Name of JEC Representative)	Lung Li		16/4/2025
Witnessed By : (Name of RCL)	Crystal Cheung		16/4/2025
Witnessed By : (Name of AMMS)	Sam Lai		16/4/2025
Witnessed By : (Name of)			
Witnessed By : (Name of)			

~~Lower Before Upper Lower After Upper~~

~~1st Col. 30.3~~

~~2nd Col. 30.5~~

~~3rd Col 40.9~~

NA

Gammon

CTA INTERNATIONAL AS CLEAN TUNNEL AIR

Air Purification System – HV Power Supply Units Test & Commissioning Report			
Contract No.:	HY/2019/13	RISC No.:	33297
Project:	Central Kowloon Route - Buildings, Electrical and Mechanical	Date:	16/4/2025
Location:	(YVB) / HVB / KVB	Room Name:	APS Plenum 1
T&C Plan Ref. No:		Page:	
Ref. Dwg. No.:			

Part 4 : Functional and Performance Tests for HV Power Supply Units (Sheet 1 of 5)

A) Maximum Voltage Withstand Test for ESP Cell (TCP Section 4.6.1) 1 2 3 (4) 5

From:	ESP HV Switch Room (01) / 02	To:	APS Plenum No. (01) / 02 / 03 Sub-assembly A / B / C / (D) / E

Step 1 & 3 - Insulation Resistance Test before and after the Maximum Voltage Withstand Test

Items	Circuit No. or Details of Equipment	Insulation Resistance (MΩ)	
		Before Max. Withstand Tests	After Max. Withstand Tests
1	(1st Col. Ionizer to Earth)	256 (Lower 3 ESP Cell) / 228 (Upper 3 ESP Cell)	217 (Lower 3 ESP Cell) / 87 (Upper 3 ESP Cell)
2	(2nd Col. Ionizer to Earth)	229 (Lower 3 ESP Cell) / 228 (Upper 3 ESP Cell)	142 (Lower 3 ESP Cell) / 73.3 (Upper 3 ESP Cell)
3	(3rd Col. Ionizer to Earth)	222 (Lower 3 ESP Cell) / 233 (Upper 3 ESP Cell)	121 (Lower 3 ESP Cell) / 99.6 (Upper 3 ESP Cell)
4	(1st to 3rd Col. Collector the Earth)	~~30.41~~ (1st Col.) / ~~41.87~~ (2nd Col.) / 35.2 (3rd Col.)	102 (1st Col.) / 67.4 (2nd Col.) / 39.9 (3rd Col.)

Step 2 - Maximum Voltage Withstand Test 77.7 68.4 Lower

Items	Test Voltage (kV DC)	Duration (min)	Measured Voltage (kV DC)	Test Result
1	20 (Ionizer)	1	Upper 19.85 / 19.94	(P) / F / NA
2	20 (Ionizer)		19.70 / 19.69	(P) / F / NA
3	20 (Ionizer)		19.86 / 19.78	(P) / F / NA
4	8 (Collector)	1	7.23	(P) / F / NA

B) List of Testing Equipment / Instruments

Type	Model	Serial No	Calibration Cert. No	Date of Cert.
HV insulation tester	AR3125	681935T	KS2502121278D001	26/02/2025
HV DC Voltage Meter	HVP-40DM	20240071	AC220250303 0801	03/03/2025

Remark: P / F / NA = Pass / Fail / Not Applicable
The passing criteria for the test is passing the insulation test after for maximum voltage withstand test.
The insulation resistance is over 1000MOhm (*) for HV DC Cable and 30MOhm for ESP Cell

Comment:

	Name:	Signature:	Date:
Test / Checked By : REW No.: Grade (Name of CTA Representative)	Ho Tung		16/4/2025
Witnessed By : (Name of JEC Representative)	Lucy Li		16/4/2025
Witnessed By : (Name of GCL)	Crystal Cheung		16/4/2025
Witnessed By : (Name of AMMJV)	Sam Lui		16/4/2025
Witness By : (Name of)			
Witness By : (Name of)			

~~Before~~ ~~After~~
~~lower Upper Lower Upper~~ } NA
~~1st Col. 42~~
~~2nd Col. 43.5~~
~~3rd Col.~~

Gammon

CTA INTERNATIONAL AS CLEAN TUNNEL AIR

Air Purification System – HV Power Supply Units Test & Commissioning Report			
Contract No.:	HY/2019/13	RISC No.:	33297
Project:	Central Kowloon Route - Buildings, Electrical and Mechanical	Date:	16/4/2025
Location:	YVB / HVB / KVB	Room Name:	APS Plenum 1
T&C Plan Ref. No:		Page:	
Ref. Dwg. No.:			

Part 4 : Functional and Performance Tests for HV Power Supply Units (Sheet 1 of 5)

A) Maximum Voltage Withstand Test for ESP Cell (TCP Section 4.6.1)

From:	ESP HV Switch Room 01 / 02	To:	APS Plenum No 01 / 02 / 03 Sub-assembly A / B / C / D / E (1 2 3 4 5)

Step 1 & 3 - Insulation Resistance Test before and after the Maximum Voltage Withstand Test

Items	Circuit No. or Details of Equipment	Insulation Resistance (MΩ)	
		Before Max. Withstand Tests	After Max. Withstand Tests
1	(1st Col. Ionizer to Earth)	227 (Lower 3 ESP Cell) / 380 (Upper 3 ESP Cell)	180 (Lower 3 ESP Cell) / 73.7 (Upper 3 ESP Cell)
2	(2nd Col. Ionizer to Earth)	224 (Lower 3 ESP Cell) / 256 (Upper 3 ESP Cell)	164 (Lower 3 ESP Cell) / 75.2 (Upper 3 ESP Cell)
3	(3rd Col. Ionizer to Earth)	270 (Lower 3 ESP Cell) / 254 (Upper 3 ESP Cell)	~~126~~ 159 (Lower 3 ESP Cell) / 86.9 (Upper 3 ESP Cell)
4	(1st to 3rd Col. Collector the Earth)	~~9.4~~ (1st Col.) / ~~15.4~~ (2nd Col.) / 41.1 (3rd Col.)	55.8 (1st Col.) / 82.6 (2nd Col.) / 42.2 (3rd Col.)

Step 2 - Maximum Voltage Withstand Test 48.2 ~~Refer to below~~ 62.2

Items	Test Voltage (kV DC)	Duration (min)	Measured Voltage (kV DC) Upper	Measured Voltage (kV DC) Lower	Test Result
1	20 (Ionizer)	1	19.56	20.08	(P) / F / NA
2	20 (Ionizer)		19.87	19.68	(P) / F / NA
3	20 (Ionizer)		20.18	19.72	(P) / F / NA
4	8 (Collector)	1	7.22		(P) / F / NA

B) List of Testing Equipment / Instruments

Type	Model	Serial No	Calibration Cert. No	Date of Cert.
HV insulation tester	AR3125	6819355	KS2525021278D001	26/02/2025
HV DC Voltage Meter	HVP-40DM	20240071	ACZ20250303080 1	03/03/2025

Remark: P / F / NA = Pass / Fail / Not Applicable
The passing criteria for the test is passing the insulation test after for maximum voltage withstand test.
The insulation resistance is over 1000MOhm (*) for HV DC Cable and 30MOhm for ESP Cell

Comment:

	Name:	Signature:	Date:
Test / Checked By : REW No.: Grade (Name of CTA Representative)	Ho Tung		16/4/2025
Witnessed By : (Name of JEC Representative)	Lucy Li		16/4/2025
Witnessed By : (Name of GCL)	Crystal Cheung		16/4/2025
Witnessed By : (Name of AMMJV)	Sam Lui		16/4/2025
Witnessed By : (Name of)			
Witnessed By : (Name of)			

~~Before~~ ~~After~~

	~~Lower~~	~~Upper~~	~~Lower~~	~~Upper~~
~~1st Col.~~		~~46 MΩ~~		
~~2nd Col.~~	~~31.4 MΩ~~	~~63 MΩ~~		
~~3rd Col.~~		~~35.2 MΩ~~		

NA

Gammon

CTA INTERNATIONAL AS CLEAN TUNNEL AIR

Air Purification System – HV Power Supply Units Test & Commissioning Report			
Contract No.:	HY/2019/13	RISC No.:	35277
Project:	Central Kowloon Route - Buildings, Electrical and Mechanical	Date:	16/4/2025
Location:	YVB / HVB / KVB	Room Name:	APS Plenum 1
T&C Plan Ref. No:		Page:	
Ref. Dwg. No.:			

Part 4 : Functional and Performance Tests for HV Power Supply Units (Sheet 1 of 5)

A) Maximum Voltage Withstand Test for ESP Cell (TCP Section 4.6.1) 1 2 3 4 5

From:	ESP HV Switch Room 01 / 02	To:	APS Plenum No. 01 / 02 / 03 Sub-assembly A / B / C / D / E

Step 1 & 3 - Insulation Resistance Test before and after the Maximum Voltage Withstand Test

Items	Circuit No. or Details of Equipment	Insulation Resistance (MΩ)	
		Before Max. Withstand Tests	After Max. Withstand Tests
1	(1st Col. Ionizer to Earth)	203 (Lower 3 ESP Cell) / 205 (Upper 3 ESP Cell)	134 (Lower 3 ESP Cell) / 68.9 (Upper 3 ESP Cell)
2	(2nd Col. Ionizer to Earth)	208 (Lower 3 ESP Cell) / 207 (Upper 3 ESP Cell)	128 (Lower 3 ESP Cell) / 77.4 (Upper 3 ESP Cell)
3	(3rd Col. Ionizer to Earth)	235 (Lower 3 ESP Cell) / 218 (Upper 3 ESP Cell)	197 (Lower 3 ESP Cell) / 87.5 (Upper 3 ESP Cell)
4	(1st to 3rd Col. Collector the Earth)	77.6 (1st Col.) / 78.6 (2nd Col.) / 119 (3rd Col.)	74.8 (1st Col.) / 69.1 (2nd Col.) / 175 (3rd Col.)

Step 2 - Maximum Voltage Withstand Test

Items	Test Voltage (kV DC)	Duration (min)	Measured Voltage (kV DC) Upper / Lower	Test Result
1	20 (Ionizer)	1	19.99 / 19.61	P / F / NA
2	20 (Ionizer)		19.73 / 19.75	P / F / NA
3	20 (Ionizer)		19.57 / 19.92	P / F / NA
4	8 (Collector)	1	7.22	P / F / NA

B) List of Testing Equipment / Instruments

Type	Model	Serial No	Calibration Cert. No	Date of Cert.
HV Insulation Tester	AR3125	6819355	KS2S2502127800 01	26/02/2025
HV DC Voltage Meter	HVP-40DM	20240071	AC2-20250503080 1	03/03/2025

Remark: P / F / NA = Pass / Fail / Not Applicable
The passing criteria for the test is passing the insulation test after for maximum voltage withstand test.
The insulation resistance is over 1000MOhm (*) for HV DC Cable and 30MOhm for ESP Cell

Comment:

	Name:	Signature:	Date:
Test / Checked By : REW No.: Grade (Name of CTA Representative)	Ho Tung		16/4/2025
Witnessed By : (Name of JEC Representative)	Lucy Li		16/4/2025
Witnessed By : (Name of BCL)	Crystal Cheung		16/4/2025
Witnessed By : (Name of AMSU)	Sam Lau		16/4/2025
Witness By : (Name of)			
Witness By : (Name of)			

~~Before~~ ~~After~~
~~Lower~~ ~~Upper~~
~~1st Col. 30.2~~
~~2nd Col.~~
~~3rd Col. 31.6~~

NA

Gammon

CTA INTERNATIONAL AS

Air Purification System – HV Power Supply Units Test & Commissioning Report			
Contract No.:	HY/2019/13	RISC No.:	35297
Project:	Central Kowloon Route - Buildings, Electrical and Mechanical	Date:	16 / 4 / 2025
Location:	(KVB) / HVB / KVB	Room Name:	APS Plenum 1
T&C Plan Ref. No:		Page:	
Ref. Dwg. No.:			

Part 4 : Functional and Performance Tests for HV Power Supply Units (Sheet 1 of 5)

A) Maximum Voltage Withstand Test for ESP Cell (TCP Section 4.6.1) 1 (2) 3 4 5

From:	ESP HV Switch Room (01) / 02	To:	APS Plenum No (01) / 02 / 03 Sub-assembly A / (B) / C / D / E

Step 1 & 3 - Insulation Resistance Test before and after the Maximum Voltage Withstand Test

Items	Circuit No. or Details of Equipment	Insulation Resistance (MΩ)	
		Before Max. Withstand Tests	After Max. Withstand Tests
1	(1st Col. Ionizer to Earth)	204 (Lower 3 ESP Cell) / 228 (Upper 3 ESP Cell)	71.1 (Lower 3 ESP Cell) / 88.2 (Upper 3 ESP Cell)
2	(2nd Col. Ionizer to Earth)	211 (Lower 3 ESP Cell) / 223 (Upper 3 ESP Cell)	169 (Lower 3 ESP Cell) / 89.3 (Upper 3 ESP Cell)
3	(3rd Col. Ionizer to Earth)	216 (Lower 3 ESP Cell) / 227 (Upper 3 ESP Cell)	188 (Lower 3 ESP Cell) / 87.4 (Upper 3 ESP Cell)
4	(1st to 3rd Col. Collector the Earth)	42.31 (1st Col.) 87.6 (2nd Col.) / 51.4 (3rd Col.)	49 (1st Col.) / 87.8 (2nd Col.) / 52.5 (3rd Col.)

Step 2 - Maximum Voltage Withstand Test

Items	Test Voltage (kV DC)	Duration (min)	Measured Voltage (kV DC) Upper / Lower	Test Result
1	20 (Ionizer)	1	19.61 / 19.82	(P) / F / NA
2	20 (Ionizer)		19.73 / 19.97	(P) / F / NA
3	20 (Ionizer)		L: ~~19.02~~ 20.04 / 20.03	(P) / F / NA
4	8 (Collector)	1	7.22	(P) / F / NA

B) List of Testing Equipment / Instruments

Type	Model	Serial No	Calibration Cert. No	Date of Cert.
HV Insulation tester	AR3125	6819355	KS2525021278D001	26/02/2025
HV DC Voltage Meter	HVP-40DM	20240071	ACZ20250503080 1	03/03/2025

Remark: P / F / NA = Pass / Fail / Not Applicable
The passing criteria for the test is passing the insulation test after for maximum voltage withstand test.
The insulation resistance is over 1000MOhm (*) for HV DC Cable and 30MOhm for ESP Cell

Comment:

	Name:	Signature:	Date:
Test / Checked By : REW No.: Grade (Name of CTA Representative)	Ho Tung		16/4/2025
Witnessed By : (Name of JEC Representative)	Lucy Li		16/4/2025
Witnessed By : (Name of BCL)	Crystal Cheung		16/4/2025
Witnessed By : (Name of AMJV)	Sam Lui		16/4/2025
Witnessed By : (Name of)			
Witnessed By : (Name of)			

~~Before~~ ~~After~~

~~Lower Upper Lower Upper~~

~~1st Col.~~

~~2nd Col.~~

~~3rd Col.~~

NA

Gammon

CTA INTERNATIONAL AS

Air Purification System – HV Power Supply Units Test & Commissioning Report			
Contract No.:	HY/2019/13	RISC No.:	35297
Project:	Central Kowloon Route - Buildings, Electrical and Mechanical	Date:	16/4/2025
Location:	YVB / HVB / KVB	Room Name:	APS Plenum 1
T&C Plan Ref. No:		Page:	
Ref. Dwg. No.:			

Part 4 : Functional and Performance Tests for HV Power Supply Units (Sheet 1 of 5)

A) Maximum Voltage Withstand Test for ESP Cell (TCP Section 4.6.1) 1 2 3 4 5

From:	ESP HV Switch Room 01 / 02	To:	APS Plenum No 01 / 02 / 03 Sub-assembly A / B / C / D / E

Step 1 & 3 - Insulation Resistance Test before and after the Maximum Voltage Withstand Test

Items	Circuit No. or Details of Equipment	Insulation Resistance (MΩ)	
		Before Max. Withstand Tests	After Max. Withstand Tests
1	(1st Col. Ionizer to Earth)	202 (Lower 3 ESP Cell) / 219 (Upper 3 ESP Cell)	111 (Lower 3 ESP Cell) / 84.1 (Upper 3 ESP Cell)
2	(2nd Col. Ionizer to Earth)	203 (Lower 3 ESP Cell) / 228 (Upper 3 ESP Cell)	71.4 (Lower 3 ESP Cell) / 99.7 (Upper 3 ESP Cell)
3	(3rd Col. Ionizer to Earth)	214 (Lower 3 ESP Cell) / 215 (Upper 3 ESP Cell)	126 (Lower 3 ESP Cell) / 80 (Upper 3 ESP Cell)
4	(1st to 3rd Col. Collector the Earth)	59.1 (1st Col.) / 88.2 (2nd Col.) / ~~33.9~~ 75.9 (3rd Col.) Upper / Lower	63.5 (1st Col.) 90.4 (2nd Col.) / 68.7 (3rd Col.)

Step 2 - Maximum Voltage Withstand Test

Items	Test Voltage (kV DC)	Duration (min)	Measured Voltage (kV DC)	Test Result
1	20 (Ionizer)	1	19.59 19.76	(P) / F / NA
2	20 (Ionizer)		19.92 19.97	(P) / F / NA
3	20 (Ionizer)		19.86 19.84	(P) / F / NA
4	8 (Collector)	1	7.22	(P) / F / NA

B) List of Testing Equipment / Instruments

Type	Model	Serial No	Calibration Cert. No	Date of Cert.
HV insulation tester	AR 3125	6819355	KS2525021278D001	26/02/2025
HV DC Voltage Meter	HVP-40DM	20240071	ACZ20250303080l	03/03/2025

Remark: P / F / NA = Pass / Fail / Not Applicable
The passing criteria for the test is passing the insulation test after for maximum voltage withstand test.
The insulation resistance is over 1000MOhm (*) for HV DC Cable and 30MOhm for ESP Cell

Comment:

	Name:	Signature:	Date:
Test / Checked By : REW No.: Grade (Name of CTA Representative)	Ho Tung		16/4/2025
Witnessed By : (Name of JEC Representative)	Lung Li		16/4/2025
Witnessed By : (Name of BCL)	Crystal Cheung		16/4/2025
Witnessed By : (Name of AMMSL)	Sam Lai		16/4/2025
Witnessed By : (Name of)			
Witnessed By : (Name of)			

~~Before~~ ~~After~~
~~Lower Upper Lower Upper~~
~~1st Col. 30.3~~
~~2nd Col. 30.5~~
~~3rd Col 40.9~~

NA

Gammon

CTA INTERNATIONAL AS CLEAN TUNNEL AIR

Air Purification System – HV Power Supply Units Test & Commissioning Report

Contract No.:	HY/2019/13	RISC No.:	33277
Project:	Central Kowloon Route - Buildings, Electrical and Mechanical	Date:	16/4/2025
Location:	YVB / HVB / KVB	Room Name:	APS Plenum 1
T&C Plan Ref. No:		Page:	
Ref. Dwg. No.:			

Part 4 : Functional and Performance Tests for HV Power Supply Units (Sheet 1 of 5)

A) Maximum Voltage Withstand Test for ESP Cell (TCP Section 4.6.1) 1 2 3 4 5

From:	ESP HV Switch Room 01 / 02	To:	APS Plenum No.01 / 02 / 03 Sub-assembly A / B / C / D / E

Step 1 & 3 - Insulation Resistance Test before and after the Maximum Voltage Withstand Test

Items	Circuit No. or Details of Equipment	Insulation Resistance (MΩ)	
		Before Max. Withstand Tests	After Max. Withstand Tests
1	(1st Col. Ionizer to Earth)	256 (Lower 3 ESP Cell) / 228 (Upper 3 ESP Cell)	217 (Lower 3 ESP Cell) / 87 (Upper 3 ESP Cell)
2	(2nd Col. Ionizer to Earth)	229 (Lower 3 ESP Cell) / 228 (Upper 3 ESP Cell)	142 (Lower 3 ESP Cell) / 73.3 (Upper 3 ESP Cell)
3	(3rd Col. Ionizer to Earth)	222 (Lower 3 ESP Cell) / 233 (Upper 3 ESP Cell)	121 (Lower 3 ESP Cell) / 99.6 (Upper 3 ESP Cell)
4	(1st to 3rd Col. Collector the Earth)	~~30.4~~ (1st Col.) / ~~41.8~~ (2nd Col.) / 35.2 (3rd Col.)	102 (1st Col.) / 67.4 (2nd Col.) / 39.9 (3rd Col.)

Step 2 - Maximum Voltage Withstand Test 77.7 68.4

Items	Test Voltage (kV DC)	Duration (min)	Measured Voltage (kV DC) Upper / Lower	Test Result
1	20 (Ionizer)	1	19.85 / 19.94	P / F / NA
2	20 (Ionizer)		19.70 / 19.69	P / F / NA
3	20 (Ionizer)		19.86 / 19.78	P / F / NA
4	8 (Collector)	1	7.23	P / F / NA

B) List of Testing Equipment / Instruments

Type	Model	Serial No	Calibration Cert. No	Date of Cert.
HV insulation tester	AR3125	681931T	KS2502127 8D001	26/02/2025
HV DC Voltage Meter	HVP-40DM	20240071	AC220250303 0801	03/03/2025

Remark: P / F / NA = Pass / Fail / Not Applicable
The passing criteria for the test is passing the insulation test after for maximum voltage withstand test.
The insulation resistance is over 1000MOhm (*) for HV DC Cable and 30MOhm for ESP Cell

Comment:

	Name:	Signature:	Date:
Test / Checked By : REW No.: Grade (Name of CTA Representative)	Ho Tung		16/4/2025
Witnessed By : (Name of JEC Representative)	Lucy Li		16/4/2025
Witnessed By : (Name of GCL)	Crystal Cheung		16/4/2025
Witnessed By : (Name of AMMJV)	Sam Lui		16/4/2025
Witnessed By : (Name of)			
Witnessed By : (Name of)			

~~Before~~ ~~After~~
~~lower Upper Lower Upper~~ } NA
~~1st Col. 42~~
~~2nd Col. 43.5~~
~~3rd Col.~~

Gammon

CTA INTERNATIONAL AS

Air Purification System – HV Power Supply Units Test & Commissioning Report			
Contract No.:	HY/2019/13	RISC No.:	33297
Project:	Central Kowloon Route - Buildings, Electrical and Mechanical	Date:	16/4/2025
Location:	YVB / HVB / KVB	Room Name:	APS Plenum 1
T&C Plan Ref. No:		Page:	
Ref. Dwg. No.:			

Part 4 : Functional and Performance Tests for HV Power Supply Units (Sheet 1 of 5)

A) Maximum Voltage Withstand Test for ESP Cell (TCP Section 4.6.1)

From:	ESP HV Switch Room 01 / 02	To:	APS Plenum No. 01 / 02 / 03 Sub-assembly A / B / C / D / E (1 2 3 4 5)

Step 1 & 3 - Insulation Resistance Test before and after the Maximum Voltage Withstand Test

Items	Circuit No. or Details of Equipment	Insulation Resistance (MΩ)	
		Before Max. Withstand Tests	After Max. Withstand Tests
1	(1st Col. Ionizer to Earth)	237 (Lower 3 ESP Cell) / 380 (Upper 3 ESP Cell)	180 (Lower 3 ESP Cell) / 73.7 (Upper 3 ESP Cell)
2	(2nd Col. Ionizer to Earth)	224 (Lower 3 ESP Cell) / 256 (Upper 3 ESP Cell)	164 (Lower 3 ESP Cell) / 75.2 (Upper 3 ESP Cell)
3	(3rd Col. Ionizer to Earth)	270 (Lower 3 ESP Cell) / 254 (Upper 3 ESP Cell)	~~126~~ 159 (Lower 3 ESP Cell) / 86.9 (Upper 3 ESP Cell)
4	(1st to 3rd Col. Collector the Earth)	~~29.4~~ (1st Col.) / ~~15.4~~ (2nd Col.) / 41.1 (3rd Col.)	55.8 (1st Col.) / 82.6 (2nd Col.) / 42.2 (3rd Col.)

Step 2 - Maximum Voltage Withstand Test 48.2 ~~Before~~ 62.2 ~~to below~~

Items	Test Voltage (kV DC)	Duration (min)	Measured Voltage (kV DC) Upper	Lower	Test Result
1	20 (Ionizer)	1	19.56	20.08	P / F / NA
2	20 (Ionizer)		19.87	19.68	P / F / NA
3	20 (Ionizer)		20.18	19.72	P / F / NA
4	8 (Collector)	1	7.22		P / F / NA

B) List of Testing Equipment / Instruments

Type	Model	Serial No	Calibration Cert. No	Date of Cert.
HV insulation tester	AR3125	6819355	KS2525021278D001	26/02/2025
HV DC Voltage Meter	HVP-40DM	20240071	AC220250303080 1	03/03/2025

Remark: P / F / NA = Pass / Fail / Not Applicable
The passing criteria for the test is passing the insulation test after for maximum voltage withstand test.
The insulation resistance is over 1000MOhm (*) for HV DC Cable and 30MOhm for ESP Cell

Comment:

	Name:	Signature:	Date:
Test / Checked By : REW No.: Grade (Name of CTA Representative)	Ho Tung		16/4/2025
Witnessed By : (Name of JEC Representative)	Lucy Li		16/4/2025
Witnessed By : (Name of GCL)	Crystal Cheung		16/4/2025
Witnessed By : (Name of AMMSV)	Sam Lui		16/4/2025
Witnessed By : (Name of)			
Witnessed By : (Name of)			

~~Before~~ ~~After~~

	~~Lower~~	~~Upper~~	~~Lower~~	~~Upper~~
~~1st Col.~~		~~46 MΩ~~		
~~2nd Col.~~	~~31.4 MΩ~~	~~63 MΩ~~		
~~3rd Col.~~		~~35.2 MΩ~~		

NA

Gammon

CTA INTERNATIONAL AS

Air Purification System – HV Power Supply Units Test & Commissioning Report			
Contract No.:	HY/2019/13	RISC No.:	33247A
Project:	Central Kowloon Route - Buildings, Electrical and Mechanical	Date:	16 APR 2025
Location:	YVB / HVB / KVB	Room Name:	
T&C Plan Ref. No:	J3883-TVS-S-06283	Page:	
Ref. Dwg. No.:			

Part 4 : Functional and Performance Tests for HV Power Supply Units (Sheet 2A of 5)

C) ESP HV Power Supply Cabinets Information

Cabinets ID:	YVB-APS1-ESP-PSC-01	Main Switch Rating:	80A
Location:	ESP HV Switch Room 01 / 02	Fed From:	YVB-DB-ESP01-1

D) Output Voltage Measurement for HV Power Supply Units (TCP Section 4.6.2)

Item	Circuit No. or Details of Equipment	Vol-meter Reading at PSU (kV)	Am-meter Reading of PSU (mA)	Measured Voltage (kV) at ESP	Result (see remark)
1	Y VB-APS1-PSU-01A Subassembly 14 kV (I1)	14	70.3	14	P / F
2	Y VB-APS1-PSU-02A Subassembly 14 kV (I2)	14	69.1	14	P / F
3	Y VB-APS1-PSU-03A Subassembly 14 kV (I3)	14	68.5	14	P / F
4	Y VB-APS__-PSU-04A Subassembly 6.5 kV (C)	6.5	11	6.5	P / F
5	Y VB-APS__-PSU-05B Subassembly 14 kV (I1)	14	70.2	14	P / F
6	Y VB-APS__-PSU-06B Subassembly 14 kV (I2)	14	69.3	14	P / F
7	Y VB-APS__-PSU-07B Subassembly 14 kV (I3)	14	68.4	14	P / F
8	Y VB-APS__-PSU-08B Subassembly 6.5 kV (C)	6.5	11.5	6.5	P / F
9	Y VB-APS__-PSU-09C Subassembly 14 kV (I1)	14	71.3	14	P / F
10	Y VB-APS__-PSU-10C Subassembly 14 kV (I2)	14	68.7	14	P / F

E) List of Testing Equipment / Instruments

Type	Model	Serial No	Calibration Cert. No	Date of Cert.
DC Voltage Meter	HVP-40DM	20230668	ZD202508111226	11/08/2025

Remark: P / F = Pass / Fail, measured output voltage for ionizer and for collector is±14kV ±5% 6.5kV ±5%

Comment:

Test / Checked By : REW No.: W133567 Grade B+H (Name of CTA Representative)	Name: Ho Tung	Signature: Ho Tung	Date: 16 APR 2025
Witnessed By : (Name of JEC Representative)	Name: John Chan	Signature:	Date: 16 APR 2025
Witnessed By : (Name of GCL)	Name: Boris Yan	Signature:	Date: 16 APR 2025
Witnessed By : (Name of AMMTV)	Name: Tam Wing kit	Signature:	Date: 15 APR 2025
Witnessed By : (Name of EMSD)	Name: WONG Cheong Shing CIE/TSC/1	Signature:	Date: 15 APR 2025
Witnessed By : (Name of)	Name:	Signature:	Date:

Gammon

CTA INTERNATIONAL AS CLEAN TUNNEL AIR

Air Purification System – HV Power Supply Units Test & Commissioning Report			
Contract No.:	HY/2019/13	RISC No.:	33297A
Project:	Central Kowloon Route - Buildings, Electrical and Mechanical	Date:	16 APR 2025
Location:	YVB / HVB / KVB	Room Name:	
T&C Plan Ref. No:	J3883-TVS-S-06283	Page:	
Ref. Dwg. No.:			

Part 4 : Functional and Performance Tests for HV Power Supply Units (Sheet 2B of 5)

C) ESP HV Power Supply Cabinets Information

Cabinets ID:	Y VB-APS 1 -ESP-PSC-0 2	Main Switch Rating:	80A
Location:	ESP HV Switch Room 01 / 02	Fed From:	YVB-DB-ZSP01-2

D) Output Voltage Measurement for HV Power Supply Units (TCP Section 4.6.2)

Item	Circuit No. or Details of Equipment	Vol-meter Reading at PSU (kV)	Am-meter Reading of PSU (mA)	Measured Voltage (kV) at ESP	Result (see remark)
1	Y VB-APS__-PSU-11C Subassembly 14 kV (I3)	14	69.5	14	P / F
2	Y VB-APS__-PSU-12C Subassembly 6.5 kV (C)	6.5	10.5	6.5	P / F
3	Y VB-APS__-PSU-13D Subassembly 14 kV (I1)	14	70.2	14	P / F
4	Y VB-APS__-PSU-14D Subassembly 14 kV (I2)	14	71.5	14	P / F
5	Y VB-APS__-PSU-15D Subassembly 14 kV (I3)	14	70.9	14	P / F
6	Y VB-APS__-PSU-16D Subassembly 6.5 kV (C)	6.5	10.8	6.5	P / F
7	Y VB-APS__-PSU-17E Subassembly 14 kV (I1)	14	72.1	14	P / F
8	Y VB-APS__-PSU-18E Subassembly 14 kV (I2)	14	70.9	14	P / F
9	Y VB-APS__-PSU-19E Subassembly 14 kV (I3)	14	69.8	14	P / F
10	Y VB-APS__-PSU-20E Subassembly 6.5 kV (C)	6.5	10.5	6.5	P / F

E) List of Testing Equipment / Instruments

Type	Model	Serial No	Calibration Cert. No	Date of Cert.
DC Voltage Meter	HVP-40DM	~~20230668~~ 20240071	~~ZD202508111226~~	~~11/08/2025~~
			ACZ20250303080 1	03/03/2025

Remark: P / F = Pass / Fail, measured output voltage for ionizer and for collector is ±14kV ±5% 6.5kV ±5%

Comment:

Test / Checked By : REW No.: W133567 Grade B+H (Name of CTA Representative)	Name: Ho Tung	Signature:	Date: 16 APR 2025
Witnessed By : (Name of JEC Representative)	Name: John Chan	Signature:	Date: 16 APR 2025
Witnessed By : (Name of GCL)	Name: Boris Yan	Signature:	Date: 16 APR 2025
Witnessed By : (Name of AMMJV)	Name: Tam Wing Loi	Signature:	Date: 15 APR 2025
Witnessed By : (Name of EMSD)	Name: WONG Cheong Shing CIE/TSC/1	Signature:	Date: 15 APR 2025
Witnessed By : (Name of)	Name:	Signature:	Date:

Gammon

CTA INTERNATIONAL AS CLEAN TUNNEL AIR

Air Purification System – HV Power Supply Units Test & Commissioning Report			
Contract No.:	HY/2019/13	RISC No.:	33247A
Project:	Central Kowloon Route - Buildings, Electrical and Mechanical	Date:	16 APR 2025
Location:	YVB / HVB / KVB	Room Name:	
T&C Plan Ref. No:	J3883-TVS-S-06283	Page:	
Ref. Dwg. No.:			

Part 4 : Functional and Performance Tests for HV Power Supply Units (Sheet 4A of 5)

G) Functional Test for the Constant Current Control Mode Cabinets ID: Y VB-APS 1 -ESP-PSC-0 1

(TCP Section 4.6.4)

Item	Equipment Description	Functional Test for Constant Current Control Mode				
		Before Earth Fault Simulation		During Earth Fault Simulation		Constant Output Current Observed on PSU *
		"CC" not light up	Output Current on PSU	"CC" light up	Output Current on PSU	
1	Y VB-APS__-PSU-11C Subassembly 14 kV (I3)	P / F	70.1 mA	P / F	0 mA	P / F
2	Y VB-APS__-PSU-12C Subassembly 6.5 kV (C)	P / F	10.9 mA	P / F	0 mA	P / F
3	Y VB-APS__-PSU-13D Subassembly 14 kV (I1)	P / F	71.2 mA	P / F	0 mA	P / F
4	Y VB-APS__-PSU-14D Subassembly 14 kV (I2)	P / F	69.5 mA	P / F	0 mA	P / F
5	Y VB-APS__-PSU-15D Subassembly 14 kV (I3)	P / F	70.5 mA	P / F	0 mA	P / F
6	Y VB-APS__-PSU-16D Subassembly 6.5 kV (C)	P / F	11.1 mA	P / F	0 mA	P / F
7	Y VB-APS__-PSU-17E Subassembly 14 kV (I1)	P / F	71.4 mA	P / F	0 mA	P / F
8	Y VB-APS__-PSU-18E Subassembly 14 kV (I2)	P / F	71.6 mA	P / F	0 mA	P / F
9	Y VB-APS__-PSU-19E Subassembly 14 kV (I3)	P / F	70.8 mA	P / F	0 mA	P / F
10	Y VB-APS__-PSU-20E Subassembly 6.5 kV (C)	P / F	10.8 mA	P / F	0 mA	P / F

Remarks: P / F = Pass / Fail,
* Acceptance Criteria for Output Current during the Earth Fault Simulation is ± 5% of before the Fault

Comment:

Test / Checked By : REW No.: W133567 Grade B+H (Name of CTA Representative)	Name: Ho Tung	Signature:	Date: 16 APR 2025
Witnessed By : (Name of JEC Representative)	Name: John Chan	Signature:	Date: 16 APR 2025
Witnessed By : (Name of GCL)	Name: Boris Yan	Signature:	Date: 16 APR 2025
Witnessed By : (Name of AMMTV)	Name: Tam Wing kit	Signature:	Date: 16 APR 2025
Witnessed By : (Name of EMSD)	Name: WONG Cheong Shing CIE/TSC/1	Signature:	Date: 16 APR 2025
Witnessed By : (Name of)	Name:	Signature:	Date:

Gammon

CTA INTERNATIONAL AS

Air Purification System – HV Power Supply Units Test & Commissioning Report			
Contract No.:	HY/2019/13	RISC No.:	33297A
Project:	Central Kowloon Route - Buildings, Electrical and Mechanical	Date:	16 APR 2025
Location:	YVB / HVB / KVB	Room Name:	
T&C Plan Ref. No:	J3883-TVS-S-06283	Page:	
Ref. Dwg. No.:			

Part 4 : Functional and Performance Tests for HV Power Supply Units (Sheet 4B of 5)

G) Functional Test for the Constant Current Control Mode Cabinets ID: Y VB-APS 1 -ESP-PSC-02

(TCP Section 4.6.4)

Item	Equipment Description	Functional Test for Constant Current Control Mode				
		Before Earth Fault Simulation		During Earth Fault Simulation		Constant Output Current Observed on PSU *
		"CC" not light up	Output Current on PSU	"CC" light up	Output Current on PSU	
1	Y VB-APS__-PSU-01A Subassembly 14kV (I1)	(P) / F	71.3 mA	(P) / F	0 mA	(P) / F
2	Y VB-APS__-PSU-02A Subassembly 14kV (I2)	(P) / F	70.2 mA	(P) / F	0 mA	(P) / F
3	Y VB-APS__-PSU-03A Subassembly 14kV (I3)	(P) / F	69.8 mA	(P) / F	0 mA	(P) / F
4	Y VB-APS__-PSU-04A Subassembly 6.5kV (C)	(P) / F	10.5 mA	(P) / F	0 mA	(P) / F
5	Y VB-APS__-PSU-05B Subassembly 14kV (I1)	(P) / F	68.9 mA	(P) / F	0 mA	(P) / F
6	Y VB-APS__-PSU-06B Subassembly 14kV (I2)	(P) / F	70.5 mA	(P) / F	0 mA	(P) / F
7	Y VB-APS__-PSU-07B Subassembly 14kV (I3)	(P) / F	71.2 mA	(P) / F	0 mA	(P) / F
8	Y VB-APS__-PSU-08B Subassembly 6.5kV (C)	(P) / F	10.7 mA	(P) / F	0 mA	(P) / F
9	Y VB-APS__-PSU-09C Subassembly 14kV (I1)	(P) / F	69.8 mA	(P) / F	0 mA	(P) / F
10	Y VB-APS__-PSU-10C Subassembly 14kV (I2)	(P) / F	70.5 mA	(P) / F	0 mA	(P) / F

Remarks: P / F = Pass / Fail,
* Acceptance Criteria for Output Current during the Earth Fault Simulation is ± 5% of before the Fault

Comment:

Test / Checked By : REW No.: W133567 Grade B+H (Name of CTA Representative)	Name: Ho Tung	Signature:	Date: 16 APR 2025
Witnessed By : (Name of JEC Representative)	Name: John Chan	Signature:	Date: 16 APR 2025
Witnessed By : (Name of GCL)	Name: Boris Yan	Signature:	Date: 16 APR 2025
Witnessed By : (Name of AMMTU)	Name: Tam Wing Lok	Signature:	Date: 16 APR 2025
Witnessed By : (Name of EMSD)	Name: WONG Cheong Shing CIE/TSC/1	Signature:	Date: 16 APR 2025
Witnessed By : (Name of)	Name:	Signature:	Date:

Gammon

CTA INTERNATIONAL AS CLEAN TUNNEL AIR

Air Purification System – HV Power Supply Units Test & Commissioning Report			
Contract No.:	HY/2019/13	RISC No.:	32049
Project:	Central Kowloon Route - Buildings, Electrical and Mechanical	Date:	21/03/2025
Location:	YVB / HVB / KVB	Room Name:	Plenum 2
T&C Plan Ref. No:	J3883-TVS-S-06283	Page:	
Ref. Dwg. No.:			

Part 1 : Installation Inspection of ESP HV Power Supply Cabinets (Sheet 1 of 3)			
A) ESP HV Power Supply Cabinets Information			
Cabinets ID:	YVB-APS2-ESP-PSC-01	Main Switch Rating:	~~63A~~ 80
Location:	ESP HV Switch Room 01 / 02	Supply Fed From:	YVB-DB-ESP02

B) Visual Inspection for ESP HV Power Supply Cabinets (TCP Section 4.3.1)		
Items	**Description of Inspection**	**Test Result**
a.	Verify cabinets are installed per the accepted ESP HV Switch Room layout and plant room details	P / F / NA
b.	Check clearance space (≥1400mm front, ≥600mm rear) per EMSD CoP	P / F / NA
c.	Ensure cabinets are securely fixed, sealed, and free of damage, corrosion, wear, or dust	P / F / NA
d.	Check that the cabinet door, door handle and lock are installed and operated properly	P / F / NA
C) Visual Inspection for Cabinet Top Cooling Units (TCP Section 4.3.2)		
a.	Check that the cabinet top cooling units are without visual damage, corrosion or sign of wear and tear	P / F / NA
b.	Check that the cabinet top cooling unit is securely fixed on top of the cabinets according to the accepted shop drawing and fabrication drawing	P / F / NA
c.	Check the exhaust lourve of the cabinet cooling unit to ensure no obstructions or blockages	P / F / NA
d.	Check the internal air duct is connected properly with the cabinet top cooling unit	P / F / NA
e.	Check the cable connection between cabinet and cooling unit are completed properly	P / F / NA
Remark: P / F / NA = Pass / Fail / Not Applicable		
Comment:		

Test / Checked By : REW No.: Grade (Name of CTA Representative)	Name: Ho Tung	Signature:	Date: 21/03/2025
Witnessed By : (Name of JEC Representative)	Name: CHUNG YP	Signature:	Date: 21/03/2025
Witnessed By : (Name of GCL)	Name: Raymond Lau	Signature:	Date: 21/03/2025
Witnessed By : (Name of AMASV)	Name: Sam Lui	Signature:	Date: 21/03/2025
Witnessed By : (Name of)	Name:	Signature:	Date:
Witnessed By : (Name of)	Name:	Signature:	Date:

Gammon

CTA INTERNATIONAL AS CLEAN TUNNEL AIR

Air Purification System – HV Power Supply Units Test & Commissioning Report			
Contract No.:	HY/2019/13	RISC No.:	32049
Project:	Central Kowloon Route - Buildings, Electrical and Mechanical	Date:	21/03/2025
Location:	YVB / HVB / KVB	Room Name:	Plenum 2
T&C Plan Ref. No:	J3883-TVS-S-06283	Page:	
Ref. Dwg. No.:			

Part 1 : Installation Inspection of ESP HV Power Supply Cabinets (Sheet 2 of 3)		
Items	**Description of Inspection**	**Test Result**
D) Visual Inspection for ESP HV Power Supply Units (TCP Section 4.3.3)		
a.	No visible damage to impair safety	(P) F / NA
b.	Check that the ESP HV power supply units are securely fixed inside the Power Supply Cabinet with no physical damage, or signs of deterioration	(P) F / NA
c.	Check and record the equipment ID, manufacturer, model number, serial number and other information, showing on the name plate for cabinet top cooling unit and ESP HV power supply units, and record it the initial installed location on the test form	(P) F / NA
E) Visual Inspection for Accessories inside the Cabinet (TCP Section 4.3.4)		
a.	Check that the limit switch is securely fixed on rear door of the cabinet with proper cabling works	(P) F / NA
Remark: P / F / NA = Pass / Fail / Not Applicable		
Comment:		

Test / Checked By : REW No.: Grade (Name of CTA Representative)	Name: Ho Tung	Signature:	Date: 21/03/2025
Witnessed By : (Name of JEC Representative)	Name: CHUNG TP	Signature:	Date: 21/03/2025
Witnessed By : (Name of GCL)	Name: Raymond Lau	Signature:	Date: 21/03/2025
Witnessed By : (Name of AMMJV)	Name: Sam Lui	Signature:	Date: 21/03/2025
Witnessed By : (Name of)	Name:	Signature:	Date:
Witnessed By : (Name of)	Name:	Signature:	Date:

Gammon

CTA INTERNATIONAL AS CLEAN TUNNEL AIR

Air Purification System – HV Power Supply Units Test & Commissioning Report			
Contract No.:	HY/2019/13	RISC No.:	32049
Project:	Central Kowloon Route - Buildings, Electrical and Mechanical	Date:	21/03/2025
Location:	YVB / HVB / KVB	Room Name:	Plenum 2
T&C Plan Ref. No:	J3883-TVS-S-06283	Page:	
Ref. Dwg. No.:			

Part 1 : Installation Inspection of ESP HV Power Supply Cabinets (Sheet 1 of 3)			
A) ESP HV Power Supply Cabinets Information			
Cabinets ID:	YVB-APS2-ESP-PSC-01	Main Switch Rating:	~~63A~~ 80
Location:	ESP HV Switch Room 01 / 02	Supply Fed From:	YVB-DB-ESP02

B) Visual Inspection for ESP HV Power Supply Cabinets (TCP Section 4.3.1)

Items	Description of Inspection	Test Result
a.	Verify cabinets are installed per the accepted ESP HV Switch Room layout and plant room details	P / F / NA
b.	Check clearance space (≥1400mm front, ≥600mm rear) per EMSD CoP	P / F / NA
c.	Ensure cabinets are securely fixed, sealed, and free of damage, corrosion, wear, or dust	P / F / NA
d.	Check that the cabinet door, door handle and lock are installed and operated properly	P / F / NA
C) Visual Inspection for Cabinet Top Cooling Units (TCP Section 4.3.2)		
a.	Check that the cabinet top cooling units are without visual damage, corrosion or sign of wear and tear	P / F / NA
b.	Check that the cabinet top cooling unit is securely fixed on top of the cabinets according to the accepted shop drawing and fabrication drawing	P / F / NA
c.	Check the exhaust lourve of the cabinet cooling unit to ensure no obstructions or blockages	P / F / NA
d.	Check the internal air duct is connected properly with the cabinet top cooling unit	P / F / NA
e.	Check the cable connection between cabinet and cooling unit are completed properly	P / F / NA

Remark: P / F / NA = Pass / Fail / Not Applicable

Comment:

Test / Checked By : REW No.: Grade (Name of CTA Representative)	Name: H. Tung	Signature:	Date: 21/03/2025
Witnessed By : (Name of JEC Representative)	Name: CHUNG	Signature:	Date: 21/03/2025
Witnessed By : (Name of GCL)	Name: Raymond Lau	Signature:	Date: 21/03/2025
Witnessed By : (Name of AMSL)	Name: Sam Lau	Signature:	Date: 21/03/2025
Witnessed By : (Name of)	Name:	Signature:	Date:
Witnessed By : (Name of)	Name:	Signature:	Date:

Gammon

CTA INTERNATIONAL AS CLEAN TUNNEL AIR

Air Purification System – HV Power Supply Units Test & Commissioning Report			
Contract No.:	HY/2019/13	RISC No.:	32049
Project:	Central Kowloon Route - Buildings, Electrical and Mechanical	Date:	21/03/2025
Location:	YVB / HVB / KVB	Room Name:	Plenum 2
T&C Plan Ref. No:	J3833-TVS-S-06283	Page:	
Ref. Dwg. No.:			

Part 1 : Installation Inspection of ESP HV Power Supply Cabinets (Sheet 2 of 3)		
Items	**Description of Inspection**	**Test Result**
D) Visual Inspection for ESP HV Power Supply Units (TCP Section 4.3.3)		
a.	No visible damage to impair safety	P / F / NA
b.	Check that the ESP HV power supply units are securely fixed inside the Power Supply Cabinet with no physical damage, or signs of deterioration	P / F / NA
c.	Check and record the equipment ID, manufacturer, model number, serial number and other information, showing on the name plate for cabinet top cooling unit and ESP HV power supply units, and record it the initial installed location on the test form	P / F / NA
E) Visual Inspection for Accessories inside the Cabinet (TCP Section 4.3.4)		
a.	Check that the limit switch is securely fixed on rear door of the cabinet with proper cabling works	P / F / NA
Remark: P / F / NA = Pass / Fail / Not Applicable		
Comment:		

Test / Checked By : REW No.: Grade (Name of CTA Representative)	Name: Ho Tung	Signature:	Date: 21/03/2025
Witnessed By : (Name of JEC Representative)	Name: CHUNG	Signature:	Date: 21/03/2025
Witnessed By : (Name of GCL)	Name: Raymond Lau	Signature:	Date: 21/03/2025
Witnessed By : (Name of AMTJV)	Name: Sam Lui	Signature:	Date: 21/03/2025
Witnessed By : (Name of)	Name:	Signature:	Date:
Witnessed By : (Name of)	Name:	Signature:	Date:

Gammon

CTA INTERNATIONAL AS CLEAN TUNNEL AIR

Air Purification System – HV Power Supply Units Test & Commissioning Report			
Contract No.:	HY/2019/13	RISC No.:	032050
Project:	Central Kowloon Route - Buildings, Electrical and Mechanical	Date:	25/03/2025
Location:	YVB / HVB / KVB	Room Name:	Plenum 2
T&C Plan Ref. No:	J3883-TVS-S-06283	Page:	
Ref. Dwg. No.:			

Part 2: Installation Inspection and Cable Tests for HV DC Cables (Sheet 1 of 2)

A) Visual Inspection (TCP Section 4.4.1)

Items	Description of Inspection	Test Result
a)	No visible damage to impair safety	P / F / NA
b)	Ensure all cables, HV connectors, cable glands & accessories are in good condition	P / F / NA
c)	All conductors are correctly and securely connected and identified, protected against mechanical damage, and adequately supported	P / F / NA

B) HV DC Cable Continuity Tests (TCP Section 4.4.2)

From:	ESP HV Switch Room 01 / 02	To:	APS Plenum No.01 / 02 / 03 Sub-assembly A / B / C / D / E

Items	Circuit No. or Details of Equipment	Cable Length	Continuity Resistance (Ω)			Test Result
			Measured w/ (item 0)	Measured w/o (item 0)	Passing Criteria	
0	Spare Cable **(C)**			N/A	N/A	N/A
1	YVB-APS2-HVC-01 Ionizer 1	26.3m	0.78	0.39	0.64	P / F / NA
2	YVB-APS2-HVC-02 Ionizer 2	26.0m	0.71	0.36	0.64	P / F / NA
3	YVB-APS2-HVC-03 Ionizer 3	25.2m	0.71	0.35	0.62	P / F / NA
4	YVB-APS2-HVC-04 Collector	26.9m	0.78	0.39	0.66	P / F / NA

C) List of Testing Equipment / Instruments

Type	Model	Serial No	Calibration Cert. No	Date of Cert.
Digital Micro Ohmmeter	UT620CA	C242921989	AC220250222 0127	22/02/2025
Cable Fault test	LCT268-2(KM)	250219005	AC220250303 0802	22/02/2025

Remark: P / F / NA = Pass / Fail / Not Applicable
Insulation Resistance should be >1000MΩ, Continuity Resistance shall be < 0.0245Ω/m **(B)**

Comment:

	Name:	Signature:	Date:
Test / Checked By : REW No.: Grade (Name of CTA Representative)	Lo Tung		25/03/2025
Witnessed By : (Name of JEC Representative)	CHUNG ZP		25/03/2025
Witnessed By : (Name of GCL)	Raymond Lau		25/03/2025
Witnessed By : (Name of AMJV)	Sam Lui		25/3/2025
Witnessed By : (Name of)			
Witnessed By : (Name of)			

Gammon

CTA INTERNATIONAL AS CLEAN TUNNEL AIR

Air Purification System – HV Power Supply Units Test & Commissioning Report			
Contract No.:	HY/2019/13	RISC No.:	032050
Project:	Central Kowloon Route - Buildings, Electrical and Mechanical	Date:	25/03/2025
Location:	YVB / HVB / KVB	Room Name:	Plenum 2
T&C Plan Ref. No:	J3388 3-TIS-S-06283	Page:	
Ref. Dwg. No.:			

Part 2: Installation Inspection and Cable Tests for HV DC Cables (Sheet 1 of 2)

A) Visual Inspection (TCP Section 4.4.1)

Items	Description of Inspection	Test Result
a)	No visible damage to impair safety	P / F / NA
b)	Ensure all cables, HV connectors, cable glands & accessories are in good condition	P / F / NA
c)	All conductors are correctly and securely connected and identified, protected against mechanical damage, and adequately supported	P / F / NA

B) HV DC Cable Continuity Tests (TCP Section 4.4.2)

From:	ESP HV Switch Room 01 / 02	To:	APS Plenum No.01 / 02 / 03 Sub-assembly A / B / C / D / E

Items	Circuit No. or Details of Equipment	Cable Length	Continuity Resistance (Ω)			Test Result
			Measured w/ (item 0)	Measured w/o (item 0)	Passing Criteria	
0	Spare Cable **(C)**			N/A	N/A	N/A
1	YVB-APS2-HVC-5 Ionizer 1	28.7m	0.94	0.46	0.70	P / F / NA
2	YVB-APS2-HVC-6 Ionizer 2	27.8m	0.80	0.41	0.68	P / F / NA
3	YVB-APS2-HVC-7 Ionizer 3	26.6m	0.80	0.39	0.65	P / F / NA
4	YVB-APS2-HVC-8 Collector	24.5m	0.94	0.48	0.72	P / F / NA

C) List of Testing Equipment / Instruments

Type	Model	Serial No	Calibration Cert. No	Date of Cert.
Digital Micro Ohmmeter	UT620CT	C242921984	AC220250220127	22/02/2025
Cable fault test	LCT268-2(KM)	250219005	AC220250503 0802	22/02/2025

Remark: P / F / NA = Pass / Fail / Not Applicable
Insulation Resistance should be >1000MΩ, Continuity Resistance shall be < 0.0245Ω/m **(B)**

Comment:

Test / Checked By : REW No.: Grade (Name of CTA Representative)	Name: Ho Tung	Signature:	Date: 24/03/2025
Witnessed By : (Name of JEC Representative)	Name: CHUNG TP	Signature:	Date: 25/03/2025
Witnessed By : (Name of GCL)	Name: Raymond Lau	Signature:	Date: 25/03/2025
Witnessed By : (Name of AMMSV)	Name: Sam Lui	Signature:	Date: 25/3/2025
Witnessed By : (Name of)	Name:	Signature:	Date:
Witnessed By : (Name of)	Name:	Signature:	Date:

Gammon

CTA INTERNATIONAL AS

Air Purification System – HV Power Supply Units Test & Commissioning Report			
Contract No.:	HY/2019/13	RISC No.:	032050
Project:	Central Kowloon Route - Buildings, Electrical and Mechanical	Date:	25/03/2025
Location:	YVB / HVB / KVB	Room Name:	Plenum 2
T&C Plan Ref. No:	J3553-TVS-S-06283	Page:	
Ref. Dwg. No.:			

Part 2: Installation Inspection and Cable Tests for HV DC Cables (Sheet 1 of 2)

A) Visual Inspection (TCP Section 4.4.1)

Items	Description of Inspection	Test Result
a)	No visible damage to impair safety	P / F / NA
b)	Ensure all cables, HV connectors, cable glands & accessories are in good condition	P / F / NA
c)	All conductors are correctly and securely connected and identified, protected against mechanical damage, and adequately supported	P / F / NA

B) HV DC Cable Continuity Tests (TCP Section 4.4.2)

From:	ESP HV Switch Room 01 / 02	To:	APS Plenum No.01 / 02 / 03 Sub-assembly A / B / C / D / E

Items	Circuit No. or Details of Equipment	Cable Length	Continuity Resistance (Ω)			Test Result
			Measured w/ (item 0)	Measured w/o (item 0)	Passing Criteria	
0	Spare Cable **(C)**			N/A	N/A	N/A
1	YVB-APS2-HVC-9 Ionizer 1	29.5m	1.00	0.49	0.72	P / F / NA
2	YVB-APS2-HVC-10 Ionizer 2	30.1m	0.99	0.50	0.74	P / F / NA
3	YVB-APS2-HVC-11 Ionizer 3	29.5m	0.99	0.49	0.72	P / F / NA
4	YVB-APS2-HVC-12 Collector	30.4m	1.00	0.51	0.74	P / F / NA

C) List of Testing Equipment / Instruments

Type	Model	Serial No	Calibration Cert. No	Date of Cert.
Digital Micro Ohmmeter	UT620C+	C242921984	ACZ202502220127	22/02/2025
Cable fault test	LCT268-2(KM)	250219005	ACZ202503030802	22/02/2025

Remark: P / F / NA = Pass / Fail / Not Applicable
Insulation Resistance should be >1000MΩ, Continuity Resistance shall be < 0.0245Ω/m **(B)**

Comment:

	Name:	Signature:	Date:
Test / Checked By : REW No.: Grade (Name of CTA Representative)	Ho Tim		25/03/2025
Witnessed By : (Name of JEC Representative)	CHUNG ZP		25/03/2025
Witnessed By : (Name of GCL)	Raymond Lau		25/03/2025
Witnessed By : (Name of AMMJV)	Sam Lee		25/3/2025
Witnessed By : (Name of)			
Witnessed By : (Name of)			

Gammon

CTA INTERNATIONAL AS CLEAN TUNNEL AIR

Air Purification System – HV Power Supply Units Test & Commissioning Report			
Contract No.:	HY/2019/13	RISC No.:	032050
Project:	Central Kowloon Route - Buildings, Electrical and Mechanical	Date:	25/03/2025
Location:	YVB / HVB / KVB	Room Name:	Plenum 2
T&C Plan Ref. No:	TS883-TVS-S-06283	Page:	
Ref. Dwg. No.:			

Part 2: Installation Inspection and Cable Tests for HV DC Cables (Sheet 1 of 2)

A) Visual Inspection (TCP Section 4.4.1)

Items	Description of Inspection	Test Result
a)	No visible damage to impair safety	P / F / NA
b)	Ensure all cables, HV connectors, cable glands & accessories are in good condition	P / F / NA
c)	All conductors are correctly and securely connected and identified, protected against mechanical damage, and adequately supported	P / F / NA

B) HV DC Cable Continuity Tests (TCP Section 4.4.2)

From: ESP HV Switch Room 01 / 02 To: APS Plenum No.01 / 02 / 03 Sub-assembly A / B / C / D / E

Items	Circuit No. or Details of Equipment	Cable Length	Continuity Resistance (Ω) Measured	Calculated	Passing Criteria	Test Result
1	YVB-APS2-HVC-15 Ionizer 3	30.7m	1.05	0.51	0.75	P / F / NA
2	YVB-APS2-HVC-14 Ionizer 2	31.9m		0.54	0.78	P / F / NA
3	YVB-APS2-HVC-13 Ionizer 1	32.8m	1.05	0.53	0.80	P / F / NA
4	YVB-APS2-HVC-16 Collector	32.8m		0.53	0.80	P / F / NA

C) List of Testing Equipment / Instruments

Type	Model	Serial No	Calibration Cert. No	Date of Cert.
Digital Micro Ohmmeter	UT620 ct	C242921984	AC220250220127	22/02/2025
Cable fault test	LCT2682C(KM)	250219005	AC220250303080 2	22/02/2025

Remark: P / F / NA = Pass / Fail / Not Applicable
Insulation Resistance should be >1000MΩ, Continuity Resistance shall be < 0.0245Ω/m **(B)**

Comment:

	Name:	Signature:	Date:
Test / Checked By : REW No.: Grade (Name of CTA Representative)	Leo Cheung		24/03/2025
Witnessed By : (Name of JEC Representative)	CHANG ZP		25/03/2025
Witnessed By : (Name of GCL)	Raymond Lau		25/03/2025
Witnessed By : (Name of AMMJV)	Sam Lai		25/3/2025
Witnessed By : (Name of)			
Witnessed By : (Name of)			

Gammon

CTA INTERNATIONAL AS

Air Purification System – HV Power Supply Units Test & Commissioning Report			
Contract No.:	HY/2019/13	RISC No.:	032050
Project:	Central Kowloon Route - Buildings, Electrical and Mechanical	Date:	25/03/2025
Location:	YVB / HVB / KVB	Room Name:	Plenum 2
T&C Plan Ref. No:	J3883-TVS-S-06283	Page:	
Ref. Dwg. No.:			

Part 2: Installation Inspection and Cable Tests for HV DC Cables (Sheet 1 of 2)

A) Visual Inspection (TCP Section 4.4.1)

Items	Description of Inspection	Test Result
a)	No visible damage to impair safety	P / F / NA
b)	Ensure all cables, HV connectors, cable glands & accessories are in good condition	P / F / NA
c)	All conductors are correctly and securely connected and identified, protected against mechanical damage, and adequately supported	P / F / NA

B) HV DC Cable Continuity Tests (TCP Section 4.4.2)

From: ESP HV Switch Room 01 / 02 To: APS Plenum No.01 / 02 / 03 Sub-assembly A / B / C / D / E

Items	Circuit No. or Details of Equipment	Cable Length	Continuity Resistance (Ω) Measured	Calculated	Passing Criteria	Test Result
1	YVB-APS2-HVC-19 Ionizer 3	32.5m	1.24	0.61	0.80	P / F / NA
2	YVB-APS2-HVC-18 Ionizer 2	33.3m		0.63	0.82	P / F / NA
3	YVB-APS2-HVC-17 Ionizer 1	34.5m	1.37	0.68	0.85	P / F / NA
4	YVB-APS2-HVC-20 Collector	35.1m		0.69	0.86	P / F / NA

C) List of Testing Equipment / Instruments

Type	Model	Serial No	Calibration Cert. No	Date of Cert.
Digital Micro Ohmeter	UT620CT	C242921984	AC220250222012 7	22/02/2025
Cable fault test	LCT268-2(KM)	250219005	AC220250303080 2	22/02/2025

Remark: P / F / NA = Pass / Fail / Not Applicable
Insulation Resistance should be >1000MΩ, Continuity Resistance shall be < 0.0245Ω/m **(B)**

Comment:

Test / Checked By : REW No.: Grade (Name of CTA Representative)	Name: Ho Tung	Signature:	Date: 25/03/2025
Witnessed By : (Name of JEC Representative)	Name: CHUNG	Signature:	Date: 25/03/2025
Witnessed By : (Name of GCL)	Name: Raymond Lau	Signature:	Date: 25/03/2025
Witnessed By : (Name of AMSU)	Name: Sam Lui	Signature:	Date: 25/3/2025
Witnessed By : (Name of)	Name:	Signature:	Date:
Witnessed By : (Name of)	Name:	Signature:	Date:

Gammon

CTA INTERNATIONAL AS CLEAN TUNNEL AIR

Air Purification System – HV Power Supply Units Test & Commissioning Report			
Contract No.:	HY/2019/13	RISC No.:	32050
Project:	Central Kowloon Route - Buildings, Electrical and Mechanical	Date:	25/03/2025
Location:	YVB / HVB / KVB	Room Name:	Plenum 2
T&C Plan Ref. No:	J3883-TUS-S-06283	Page:	
Ref. Dwg. No.:			

Part 2: Installation Inspection and Cable Tests for HV DC Cables (2 of 2)

D) Maximum Voltage Withstand Test for HV DC Cable (TCP Section 4.4.3)

Step 1 & 3 - Insulation Resistance Test before and after the Maximum Voltage Withstand Test

From:	ESP HV Switch Room 01 / 02	To:	APS Plenum No.01 / 02 / 03 Sub-assembly A / B / C / D / E

Items	Circuit No. or Details of Equipment	Cable Length	Insulation Resistance (MΩ) before Step 2	Insulation Resistance (MΩ) after Step 2	Test Result
1	YVB-APS2-HVC-3 Ionizer 3	25.2m	300 GΩ	400 GΩ	P / F / NA
2	YVB-APS2-HVC-2 Ionizer 2	26.0m	340 GΩ	400 GΩ	P / F / NA
3	YVB-APS2-HVC-1 Ionizer 1	26.3m	400 GΩ	450 GΩ	P / F / NA
4	YVB-APS2-HVC-4 Collector	26.9m	400 GΩ	450 GΩ	P / F / NA

Step 2 - Maximum Voltage Withstand Test

Items	Circuit No. or Details of Equipment	Test Voltage (kV DC)	Duration (Min)	Measured Voltage
1	YVB-APS2-HVC-3 Ionizer 3	20	1	20.3 kV
2	YVB-APS2-HVC-2 Ionizer 2	20	1	20.3 kV
3	YVB-APS2-HVC-1 Ionizer 1	20	1	20.3 kV
4	YVB-APS2-HVC-4 Collector	20	1	20.3 kV

E) List of Testing Equipment / Instruments

Type	Model	Serial No	Calibration Cert. No	Date of Cert.
HV insulation tester	AR3125	6819355	KSZS25021278D001	26/02/2025
HV DC Voltage tester	HVP-40DM	20240071	ACZ20250503080	03/03/2025

Remark: P / F / NA = Pass / Fail / Not Applicable,
The passing criteria for the test is passing the insulation test after for maximum voltage withstand test.
The insulation resistance is over 1000MOhm (*) for HV DC Cable and 30MOhm for ESP Cell

Comment:

	Name:	Signature:	Date:
Test / Checked By : REW No.: Grade (Name of CTA Representative)	Ho Tung		25/03/2025
Witnessed By : (Name of JEC Representative)	Chung		25/03/2025
Witnessed By : (Name of GCL)	Raymond Lau		25/03/2025
Witnessed By : (Name of AMISU)	Sam Lui		25/3/2025
Witnessed By : (Name of)			
Witnessed By : (Name of)			

Gammon

CTA INTERNATIONAL AS CLEAN TUNNEL AIR

Air Purification System – HV Power Supply Units Test & Commissioning Report			
Contract No.:	HY/2019/13	RISC No.:	32050
Project:	Central Kowloon Route - Buildings, Electrical and Mechanical	Date:	25/03/2025
Location:	YVB / HVB / KVB	Room Name:	Plenum 2
T&C Plan Ref. No:	5388 3-TVS-5-06283	Page:	
Ref. Dwg. No.:			

Part 2: Installation Inspection and Cable Tests for HV DC Cables (2 of 2)

D) Maximum Voltage Withstand Test for HV DC Cable (TCP Section 4.4.3)

Step 1 & 3 - Insulation Resistance Test before and after the Maximum Voltage Withstand Test

From:	ESP HV Switch Room 01 / 02	To:	APS Plenum No.01 / 02 / 03 Sub-assembly A / B / C / D / E

Items	Circuit No. or Details of Equipment	Cable Length	Insulation Resistance (MΩ) before Step 2	Insulation Resistance (MΩ) after Step 2	Test Result
1	YVB-APS2-HVC-7 Ionizer 3	26.6m	400GΩ	400GΩ	P / F / NA
2	YVB-APS2-HVC-6 Ionizer 2	27.8m	~340GΩ	400GΩ	P / F / NA
3	YVB-APS2-HVC-5 Ionizer 1	28.7m	~340GΩ	400GΩ	P / F / NA
4	YVB-APS2-HVC-8 Collector	29.5m	400GΩ	400GΩ	P / F / NA

Step 2 - Maximum Voltage Withstand Test

Items	Circuit No. or Details of Equipment	Test Voltage (kV DC)	Duration (Min)	Measured Voltage
1	YVB-APS2-HVC-7 Ionizer 3	20	1	20.3 kV
2	YVB-APS2-HVC-6 Ionizer 2	20	1	20.3 kV
3	YVB-APS2-HVC-5 Ionizer 1	20	1	20.3 kV
4	YVB-APS2-HVC-8 Collector	20	1	20.3 kV

E) List of Testing Equipment / Instruments

Type	Model	Serial No	Calibration Cert. No	Date of Cert.
HV insulation tester	AR3125	6819355	KS2525021278D001	26/02/2025
HV DC Voltage Meter	HVP-40DM	20240071	AC220250503080 1	03/03/2025

Remark: P / F / NA = Pass / Fail / Not Applicable,
The passing criteria for the test is passing the insulation test after for maximum voltage withstand test.
The insulation resistance is over 1000MOhm (*) for HV DC Cable and 30MOhm for ESP Cell

Comment:

	Name:	Signature:	Date:
Test / Checked By: REW No.: Grade (Name of CTA Representative)	Ho Tung		25/03/2025
Witnessed By: (Name of JEC Representative)	CHUNG		25/03/2025
Witnessed By: (Name of GCL)	Raymond Lau		25/03/2025
Witnessed By: (Name of AMMSV)	Sam Lui		25/3/2025
Witnessed By: (Name of)			
Witnessed By: (Name of)			

Gammon

CTA INTERNATIONAL AS CLEAN TUNNEL AIR

Air Purification System – HV Power Supply Units Test & Commissioning Report			
Contract No.:	HY/2019/13	RISC No.:	32050
Project:	Central Kowloon Route - Buildings, Electrical and Mechanical	Date:	25/03/2025
Location:	YVB / HVB / KVB	Room Name:	Plenum 2
T&C Plan Ref. No:	J5833-TUS-S-06223	Page:	
Ref. Dwg. No.:			

Part 2: Installation Inspection and Cable Tests for HV DC Cables (2 of 2)

D) Maximum Voltage Withstand Test for HV DC Cable (TCP Section 4.4.3)

Step 1 & 3 - Insulation Resistance Test before and after the Maximum Voltage Withstand Test

From:	ESP HV Switch Room 01 / 02	To:	APS Plenum No.01 / 02 / 03 Sub-assembly A / B / C / D / E

Items	Circuit No. or Details of Equipment	Cable Length	Insulation Resistance (MΩ) before Step 2	Insulation Resistance (MΩ) after Step 2	Test Result
1	YVB-APS 2-HVC-11 Ionizer 3	29.5m	130GΩ	400GΩ	P / F / NA
2	YVB-APS 2-HVC-10 Ionizer 2	30.1m	340GΩ	400GΩ	P / F / NA
3	YVB-APS 2-HVC-9 Ionizer 1	29.5m	130GΩ	300GΩ	P / F / NA
4	YVB-APS 2-HVC-12 Collector	30.4m	300GΩ	150GΩ	P / F / NA

Step 2 - Maximum Voltage Withstand Test

Items	Circuit No. or Details of Equipment	Test Voltage (kV DC)	Duration (Min)	Measured Voltage
1	YVB-APS 2-HVC-11 Ionizer 3	20	1	20.3 kV
2	YVB-APS 2-HVC-10 Ionizer 2	20	1	20.3 kV
3	YVB-APS 2-HVC-9 Ionizer 1	20	1	20.3 kV
4	YVB-APS 2-HVC-12 Collector	20	1	20.3 kV

E) List of Testing Equipment / Instruments

Type	Model	Serial No	Calibration Cert. No	Date of Cert.
HV insulation tester	AR3125	6819355	KS2525024278D001	26/02/2025
HV DC Voltage Meter	HVP-40DM	20240071	AC22025050308 01	03/03/2025

Remark: P / F / NA = Pass / Fail / Not Applicable,
The passing criteria for the test is passing the insulation test after for maximum voltage withstand test.
The insulation resistance is over 1000MOhm (*) for HV DC Cable and 30MOhm for ESP Cell

Comment:

	Name:	Signature:	Date:
Test / Checked By : REW No.: Grade (Name of CTA Representative)	Ho Tung		25/03/2025
Witnessed By : (Name of JEC Representative)	CHUNG		25/03/2025
Witnessed By : (Name of GCL)	Raymond Law		25/03/2025
Witnessed By : (Name of AMMSU)	Sam Lai		25/3/2025
Witnessed By : (Name of)			
Witnessed By : (Name of)			

Gammon

CTA INTERNATIONAL AS

Air Purification System – HV Power Supply Units Test & Commissioning Report			
Contract No.:	HY/2019/13	RISC No.:	32050
Project:	Central Kowloon Route - Buildings, Electrical and Mechanical	Date:	25/03/2025
Location:	YVB / HVB / KVB	Room Name:	Plenum 2
T&C Plan Ref. No:	53883-TVS-S-06283	Page:	
Ref. Dwg. No.:			

Part 2: Installation Inspection and Cable Tests for HV DC Cables (2 of 2)

D) Maximum Voltage Withstand Test for HV DC Cable (TCP Section 4.4.3)

Step 1 & 3 - Insulation Resistance Test before and after the Maximum Voltage Withstand Test

From:	ESP HV Switch Room 01 / 02	To:	APS Plenum No.01 / 02 / 03 Sub-assembly A / B / C / D / E

Items	Circuit No. or Details of Equipment	Cable Length	Insulation Resistance (MΩ) before Step 2	Insulation Resistance (MΩ) after Step 2	Test Result
1	YVB-APS2-HVC-15 Ionizer 3	30.7m	200GΩ	250GΩ	P / F / NA
2	YVB-APS2-HVC-14 Ionizer 2	31.9m	260GΩ	300GΩ	P / F / NA
3	YVB-APS2-HVC-13 Ionizer 1	32.8m	200GΩ	250GΩ	P / F / NA
4	YVB-APS2-HVC-16 Collector	32.8m	220GΩ	250GΩ	P / F / NA

Step 2 - Maximum Voltage Withstand Test

Items	Circuit No. or Details of Equipment	Test Voltage (kV DC)	Duration (Min)	Measured Voltage
1	YVB-APS2-HVC-15 Ionizer 3	20	1	20.3 kV
2	YVB-APS2-HVC-14 Ionizer 2	20	1	20.3 kV
3	YVB-APS2-HVC-13 Ionizer 1	20	1	20.3 kV
4	YVB-APS2-HVC-16 Collector	20	1	20.3 kV

E) List of Testing Equipment / Instruments

Type	Model	Serial No	Calibration Cert. No	Date of Cert.
HV insulation tester	AR3125	68/9355	KS252502127800 01	26/02/2025
HV DC Voltage Meter	HVP-40DM	20240071	AC220250503 0801	03/03/2025

Remark: P / F / NA = Pass / Fail / Not Applicable,
The passing criteria for the test is passing the insulation test after for maximum voltage withstand test.
The insulation resistance is over 1000MOhm (*) for HV DC Cable and 30MOhm for ESP Cell

Comment:

	Name:	Signature:	Date:
Test / Checked By : REW No.: Grade (Name of CTA Representative)	Ho Tung		25/03/2025
Witnessed By : (Name of JEC Representative)	CHUNG ZP		25/03/2025
Witnessed By : (Name of GCL)	Raymond Lau		25/03/2025
Witnessed By : (Name of AMMSV)	Sam Lai		25/3/2025
Witnessed By : (Name of)			
Witnessed By : (Name of)			

Gammon

CTA INTERNATIONAL AS CLEAN TUNNEL AIR

Air Purification System – HV Power Supply Units Test & Commissioning Report			
Contract No.:	HY/2019/13	RISC No.:	32050
Project:	Central Kowloon Route - Buildings, Electrical and Mechanical	Date:	25/03/2025
Location:	YVB / HVB / KVB	Room Name:	Plenum 2
T&C Plan Ref. No:	J5553-TVS-S-06253	Page:	
Ref. Dwg. No.:			

Part 2: Installation Inspection and Cable Tests for HV DC Cables (2 of 2)

D) Maximum Voltage Withstand Test for HV DC Cable (TCP Section 4.4.3)

Step 1 & 3 - Insulation Resistance Test before and after the Maximum Voltage Withstand Test

From:	ESP HV Switch Room 01 / 02	To:	APS Plenum No.01 / 02 / 03 Sub-assembly A / B / C / D / E

Items	Circuit No. or Details of Equipment	Cable Length	Insulation Resistance (MΩ) before Step 2	Insulation Resistance (MΩ) after Step 2	Test Result
1	YVB-APS2-HVC-19 Ionizer 3	32.5m	220G	200G	P / F / NA
2	YVB-APS2-HVC-18 Ionizer 2	33.3m	220G	130G	P / F / NA
3	YVB-APS2-HVC-17 Ionizer 1	34.5m	220G	200G	P / F / NA
4	YVB-APS2-HVC-20 Collector	35.1m	200G	200G	P / F / NA

Step 2 - Maximum Voltage Withstand Test

Items	Circuit No. or Details of Equipment	Test Voltage (kV DC)	Duration (Min)	Measured Voltage
1	YVB-APS2-HVC-19 Ionizer 3	20	1	20.3 kV
2	YVB-APS2-HVC-18 Ionizer 2	20	1	20.3 kV
3	YVB-APS2-HVC-17 Ionizer 1	20	1	20.3 kV
4	YVB-APS2-HVC-20 Collector	20	1	20.3 kV

E) List of Testing Equipment / Instruments

Type	Model	Serial No	Calibration Cert. No	Date of Cert.
HV insulation tester	AR3125	6819355	KS2525021278D001	26/02/2025
HV DC Voltage Meter	HVP-40DM	20240071	AC22025050308 01	03/03/2025

Remark: P / F / NA = Pass / Fail / Not Applicable,
The passing criteria for the test is passing the insulation test after for maximum voltage withstand test.
The insulation resistance is over 1000MOhm (*) for HV DC Cable and 30MOhm for ESP Cell

Comment:

	Name:	Signature:	Date:
Test / Checked By : REW No.: Grade (Name of CTA Representative)	Ho Tung		25/03/2025
Witnessed By : (Name of JEC Representative)	CHUNG		25/03/2025
Witnessed By : (Name of GCL)	Raymond Lau		25/03/2025
Witnessed By : (Name of AMMSV)	Sam Lai		25/3/2025
Witnessed By : (Name of)			
Witnessed By : (Name of)			

Gammon

CTA INTERNATIONAL AS CLEAN TUNNEL AIR

Air Purification System – HV Power Supply Units Test & Commissioning Report			
Contract No.:	HY/2019/13	RISC No.:	32667
Project:	Central Kowloon Route - Buildings, Electrical and Mechanical	Date:	21/03/2025
Location:	YVB / HVB / KVB	Room Name:	Plenum 2
T&C Plan Ref. No:	J3883-TVS-S-06283	Page:	
Ref. Dwg. No.:			

Part 3: Inspection and Test for Electrical Installations (Sheet 2A of 5)

B) Earth Loop Impedance Test (TCP Section 4.5.3)

ESP HV Power Supply Cabinets Information

Cabinets ID:	YVB-APS2-ESP-PSC-01	Main Switch Rating:	80A
Location:	ESP HV Switch Room 01 / 02	Supply Fed From:	YVB-DB-ESP02

Circuit No	Details of Equipment	Type of Protective Device	Rating	Earth Loop Impedance (Zs) (Ω)	Test Result
1	YVB-APS02-PSU-01 A Subassembly I1	RCBO	16A SP	0.10	P / F / NA
2	YVB-APS02-PSU-02 A Subassembly I2	RCBO	16A SP	0.10	P / F / NA
3	YVB-APS02-PSU-03 A Subassembly I3	RCBO	16A SP	0.12	P / F / NA
4	YVB-APS02-PSU-04 A Subassembly C	RCBO	16A SP	0.14	P / F / NA
5	YVB-APS02-PSU-05 B Subassembly I1	RCBO	16A SP	0.11	P / F / NA
6	YVB-APS02-PSU-06 B Subassembly I2	RCBO	16A SP	0.13	P / F / NA
7	YVB-APS02-PSU-07 B Subassembly I3	RCBO	16A SP	0.12	P / F / NA
8	YVB-APS02-PSU-08 B Subassembly C	RCBO	16A SP	0.13	P / F / NA
9	YVB-APS02-PSU-09 C Subassembly I1	RCBO	16A SP	0.13	P / F / NA
10	YVB-APS02-PSU-10 C Subassembly I2	RCBO	16A SP	0.14	P / F / NA

Remark: P / F / NA = Pass / Fail / Not Applicable
The Passing Criteria for the Max Earth Fault Loop Independence shall refer to EMSD COP.

Comment:

	Name:	Signature:	Date:
Test / Checked By : REW No.: Grade (Name of CTA Representative)	Ho Tung		21/03/2025
Witnessed By : (Name of JEC Representative)	CHUNG		21/03/2025
Witnessed By : (Name of GCL)	Raymond Lau		21/03/2025
Witnessed By : (Name of AMMJV)	Sam Lui		21/3/2025
Witnessed By : (Name of)			
Witnessed By : (Name of)			

Gammon

CTA INTERNATIONAL AS

Air Purification System – HV Power Supply Units Test & Commissioning Report			
Contract No.:	HY/2019/13	RISC No.:	32667
Project:	Central Kowloon Route - Buildings, Electrical and Mechanical	Date:	21/03/2025
Location:	YVB / HVB / KVB	Room Name:	Plenum 2
T&C Plan Ref. No:	J3883-TVS-S-06283	Page:	
Ref. Dwg. No.:			

Part 3: Inspection and Test for Electrical Installations (Sheet 2B of 5)

B) Earth Loop Impedance Test (TCP Section 4.5.3)

ESP HV Power Supply Cabinets Information

Cabinets ID:	YVB-APS2-ESP-PSC-02	Main Switch Rating:	80A
Location:	ESP HV Switch Room 01 / 02	Supply Fed From:	YVB-DB-ESP02

Circuit No	Details of Equipment	Type of Protective Device	Rating	Earth Loop Impedance (Zs) (Ω)	Test Result
1	YVB-APS02-PSU-11 C Subassembly I3	RCBO	16A SP	0.10	P / F / NA
2	YVB-APS02-PSU-12 C Subassembly C	RCBO	16A SP	0.09	P / F / NA
3	YVB-APS02-PSU-13 D Subassembly I1	RCBO	16A SP	0.10	P / F / NA
4	YVB-APS02-PSU-14 D Subassembly I2	RCBO	16A SP	0.11	P / F / NA
5	YVB-APS02-PSU-15 D Subassembly I3	RCBO	16A SP	0.11	P / F / NA
6	YVB-APS02-PSU-16 D Subassembly C	RCBO	16A SP	0.12	P / F / NA
7	YVB-APS02-PSU-17 E Subassembly I1	RCBO	16A SP	0.14	P / F / NA
8	YVB-APS02-PSU-18 E Subassembly I2	RCBO	16A SP	0.12	P / F / NA
9	YVB-APS02-PSU-19 E Subassembly I3	RCBO	16A SP	0.14	P / F / NA
10	YVB-APS02-PSU-20 E Subassembly C	RCBO	16A SP	0.13	P / F / NA

Remark: P / F / NA = Pass / Fail / Not Applicable
The Passing Criteria for the Max Earth Fault Loop Independence shall refer to EMSD COP.

Comment:

Test / Checked By : REW No.: Grade (Name of CTA Representative)	Name: Ho Tung	Signature:	Date: 21/03/2025
Witnessed By : (Name of JEC Representative)	Name: CHUNG	Signature:	Date: 21/03/2025
Witnessed By : (Name of GCL)	Name: Raymond Lau	Signature:	Date: 21/03/2025
Witnessed By : (Name of AMMJV)	Name: Sam Lui	Signature:	Date: 21/3/2025
Witnessed By : (Name of)	Name:	Signature:	Date:
Witnessed By : (Name of)	Name:	Signature:	Date:

Gammon

CTA INTERNATIONAL AS CLEAN TUNNEL AIR

Air Purification System – HV Power Supply Units Test & Commissioning Report			
Contract No.:	HY/2019/13	RISC No.:	32667
Project:	Central Kowloon Route - Buildings, Electrical and Mechanical	Date:	21 March 2025
Location:	YVB / HVB / KVB	Room Name:	Plenum 2
T&C Plan Ref. No:	J3883-TVS-S-06283	Page:	
Ref. Dwg. No.:	J3883-TVS-D-01676, J3883-TVS-D-01762		

Part 3: Inspection and Test for Electrical Installations (Sheet 3 of 5)

D) Functional Test of Residual Current Device (RCD) (TCP Section 4.5.3)

ESP HV Power Supply Cabinets Information

Cabinets ID:	YVB-APS2-ESP-PSC-01	Main Switch Rating:	80 ~~63~~A
Location:	ESP HV Switch Room 01 / 02	Supply Fed From:	YVB-DB-ESP02

Circuit No. or Details of Equipment	Type of Protective Device	Rating	Polarity	RCD 50% (ms)	RCD 100% (ms)	Test Result
1	RCBO	16A SP	P / F / NA	P / F / NA	27.5	P / F / NA
2	RCBO	16A SP	P / F / NA	P / F / NA	36.7	P / F / NA
3	RCBO	16A SP	P / F / NA	P / F / NA	28.4	P / F / NA
4	RCBO	16A SP	P / F / NA	P / F / NA	26.8	P / F / NA
5	RCBO	16A SP	P / F / NA	P / F / NA	37.0	P / F / NA
6	RCBO	16A SP	P / F / NA	P / F / NA	36.4	P / F / NA
7	RCBO	16A SP	P / F / NA	P / F / NA	27.1	P / F / NA
8	RCBO	16A SP	P / F / NA	P / F / NA	27.3	P / F / NA
9	RCBO	16A SP	P / F / NA	P / F / NA	27.3	P / F / NA
10	RCBO	16A SP	P / F / NA	P / F / NA	27.2	P / F / NA

Remark: P / F / NA = Pass / Fail / Not Applicable
Tripping time of RCD for 30mA leakage current shall be within 300ms.

Comment:

Test / Checked By : REW No.: Grade (Name of CTA Representative)	Name: Ho Tung	Signature:	Date: 21/03/2025
Witnessed By : (Name of JEC Representative)	Name: CHUNG	Signature:	Date: 21/03/2025
Witnessed By : (Name of GCL)	Name: Raymond Lai	Signature:	Date: 21/03/2025
Witnessed By : (Name of AMMSV)	Name: Sam Lui	Signature:	Date: 21/3/2025
Witnessed By : (Name of)	Name:	Signature:	Date:
Witnessed By : (Name of)	Name:	Signature:	Date:

Gammon

CTA INTERNATIONAL AS CLEAN TUNNEL AIR

Air Purification System – HV Power Supply Units Test & Commissioning Report			
Contract No.:	HY/2019/13	RISC No.:	32667
Project:	Central Kowloon Route - Buildings, Electrical and Mechanical	Date:	21 March 2025
Location:	~~YVB~~ / HVB / KVB	Room Name:	Plenum 2
T&C Plan Ref. No:	J3883-TVS-S-06283	Page:	
Ref. Dwg. No.:	J3883-TVS-D-01676, J3883-TVS-D-01762		

Part 3: Inspection and Test for Electrical Installations (Sheet 3 of 5)

D) Functional Test of Residual Current Device (RCD) (TCP Section 4.5.3)

ESP HV Power Supply Cabinets Information

Cabinets ID:	YVB-APS2-ESP-PSC-02	Main Switch Rating:	80 ~~63~~A
Location:	ESP HV Switch Room 01 / 02	Supply Fed From:	YVB-DB-ESP02

Circuit No. or Details of Equipment	Type of Protective Device	Rating	Polarity	RCD 50% (ms)	RCD 100% (ms)	Test Result
1	RCBO	16A SP	P / F / NA	P / F / NA	36.4	P / F / NA
2	RCBO	16A SP	P / F / NA	P / F / NA	36.6	P / F / NA
3	RCBO	16A SP	P / F / NA	P / F / NA	36.8	P / F / NA
4	RCBO	16A SP	P / F / NA	P / F / NA	36.4	P / F / NA
5	RCBO	16A SP	P / F / NA	P / F / NA	36.5	P / F / NA
6	RCBO	16A SP	P / F / NA	P / F / NA	36.8	P / F / NA
7	RCBO	16A SP	P / F / NA	P / F / NA	26.7	P / F / NA
8	RCBO	16A SP	P / F / NA	P / F / NA	37.1	P / F / NA
9	RCBO	16A SP	P / F / NA	P / F / NA	37.3	P / F / NA
10	RCBO	16A SP	P / F / NA	P / F / NA	36.6	P / F / NA

Remark: P / F / NA = Pass / Fail / Not Applicable
Tripping time of RCD for 30mA leakage current shall be within 300ms.

Comment:

Test / Checked By : REW No.: Grade (Name of CTA Representative)	Name: Ho Tung	Signature:	Date: 21/03/2025
Witnessed By : (Name of JEC Representative)	Name: CHUNG ZP	Signature:	Date: 21/03/2025
Witnessed By : (Name of GCL)	Name: Raymond Lau	Signature:	Date: 21/03/2025
Witnessed By : (Name of AMSU)	Name: Sam Lui	Signature:	Date: 21/3/2025
Witnessed By : (Name of)	Name:	Signature:	Date:
Witnessed By : (Name of)	Name:	Signature:	Date:

Gammon

CTA INTERNATIONAL AS CLEAN TUNNEL AIR

Air Purification System – HV Power Supply Units Test & Commissioning Report			
Contract No.:	HY/2019/13	RISC No.:	32667
Project:	Central Kowloon Route - Buildings, Electrical and Mechanical	Date:	21 March 2025
Location:	YVB / HVB / KVB	Room Name:	Plenum 2
T&C Plan Ref. No:	J3883-TVS-S-06283	Page:	
Ref. Dwg. No.:	J3883-TVS-D-01676, J3883-TVS-D-01762		

Part 3: Inspection and Test for Electrical Installations (Sheet 4 of 5)

E) Functional Test and Circuitry Check (TCP Section 4.5.3)

ESP HV Power Supply Cabinets Information

Cabinets ID:	YVB-APS2-ESP-PSC-01	Main Switch Rating:	80 ~~63A~~
Location:	ESP HV Switch Room 01 / 02	Supply Fed From:	YVB-DB-ESP02

Circuit No. or Details of Equipment	Type of Protective Device	Rating	Isolator	MCB	RCD Test Button	Circuitry Check
1	RCBO	16A SP	P / F / NA	P / F / NA	P / F / NA	P / F / NA
2	RCBO	16A SP	P / F / NA	P / F / NA	P / F / NA	P / F / NA
3	RCBO	16A SP	P / F / NA	P / F / NA	P / F / NA	P / F / NA
4	RCBO	16A SP	P / F / NA	P / F / NA	P / F / NA	P / F / NA
5	RCBO	16A SP	P / F / NA	P / F / NA	P / F / NA	P / F / NA
6	RCBO	16A SP	P / F / NA	P / F / NA	P / F / NA	P / F / NA
7	RCBO	16A SP	P / F / NA	P / F / NA	P / F / NA	P / F / NA
8	RCBO	16A SP	P / F / NA	P / F / NA	P / F / NA	P / F / NA
9	RCBO	16A SP	P / F / NA	P / F / NA	P / F / NA	P / F / NA
10	RCBO	16A SP	P / F / NA	P / F / NA	P / F / NA	P / F / NA
Air conditioner	RCBO ~~MCB~~	16A SP	P / F / NA	P / F / NA	P / F / NA	P / F / NA

Remark: P / F / NA = Pass / Fail / Not Applicable

Comment:

Test / Checked By : REW No.: Grade (Name of CTA Representative)	Name: Ho Tung	Signature:	Date: 21/03/2025
Witnessed By : (Name of JEC Representative)	Name: CHUNG	Signature:	Date: 21/03/2025
Witnessed By : (Name of GCL)	Name: Raymond Lee	Signature:	Date: 21/03/2025
Witnessed By : (Name of AMSU)	Name: Sam Lui	Signature:	Date: 21/3/2025
Witnessed By : (Name of)	Name:	Signature:	Date:
Witnessed By : (Name of)	Name:	Signature:	Date:

Gammon

CTA INTERNATIONAL AS CLEAN TUNNEL AIR

Air Purification System – HV Power Supply Units Test & Commissioning Report			
Contract No.:	HY/2019/13	RISC No.:	32667
Project:	Central Kowloon Route - Buildings, Electrical and Mechanical	Date:	21 March 2025
Location:	YVB / HVB / KVB	Room Name:	Plenum 2
T&C Plan Ref. No:	J3883-TVS-S-06283	Page:	
Ref. Dwg. No.:	J3883-TVS-D-01676, J3883-TVS-D-01762		

Part 3: Inspection and Test for Electrical Installations (Sheet 4 of 5)

E) Functional Test and Circuitry Check (TCP Section 4.5.3)

ESP HV Power Supply Cabinets Information

Cabinets ID:	YVB-APS2-ESP-PSC-01	Main Switch Rating:	80 ~~65~~A
Location:	ESP HV Switch Room 01 / 02	Supply Fed From:	YVB-DB-ESP02

Circuit No. or Details of Equipment	Type of Protective Device	Rating	Isolator	MCB	RCD Test Button	Circuitry Check
1	RCBO	16A SP	P / F / NA	P / F / NA	P / F / NA	P / F / NA
2	RCBO	16A SP	P / F / NA	P / F / NA	P / F / NA	P / F / NA
3	RCBO	16A SP	P / F / NA	P / F / NA	P / F / NA	P / F / NA
4	RCBO	16A SP	P / F / NA	P / F / NA	P / F / NA	P / F / NA
5	RCBO	16A SP	P / F / NA	P / F / NA	P / F / NA	P / F / NA
6	RCBO	16A SP	P / F / NA	P / F / NA	P / F / NA	P / F / NA
7	RCBO	16A SP	P / F / NA	P / F / NA	P / F / NA	P / F / NA
8	RCBO	16A SP	P / F / NA	P / F / NA	P / F / NA	P / F / NA
9	RCBO	16A SP	P / F / NA	P / F / NA	P / F / NA	P / F / NA
10	RCBO	16A SP	P / F / NA	P / F / NA	P / F / NA	P / F / NA
Air conditioner	RCBO ~~MCB~~	16A SP	P / F / NA	P / F / NA	P / F / NA	P / F / NA

Remark: P / F / NA = Pass / Fail / Not Applicable

Comment:

Test / Checked By : REW No.: Grade (Name of CTA Representative)	Name: Ho Tung	Signature:	Date: 21/03/2025
Witnessed By : (Name of JEC Representative)	Name: CHUNG ZP	Signature:	Date: 21/03/2025
Witnessed By : (Name of GCL)	Name: Raymond Lee	Signature:	Date: 21/03/2025
Witnessed By : (Name of AMASV)	Name: Sam Lui	Signature:	Date: 21/3/2025
Witnessed By : (Name of)	Name:	Signature:	Date:
Witnessed By : (Name of)	Name:	Signature:	Date:

Gammon

CTA INTERNATIONAL AS

Air Purification System – HV Power Supply Units Test & Commissioning Report			
Contract No.:	HY/2019/13	RISC No.:	32667A
Project:	Central Kowloon Route - Buildings, Electrical and Mechanical	Date:	9/10/25
Location:	YVB / HVB / KVB	Room Name:	HV Switch Rm 2
T&C Plan Ref. No:		Page:	
Ref. Dwg. No.:			

Part 3: Inspection and Test for Electrical Installations (Sheet 1 of 5)

A) Continuity Test of ESP DC Earthing Conductor and 0V conductor (TCP Section 4.5.3)

Location: ESP HV Switch Room 01 / 02

	Circuit No. or Details of Equipment	Continuity of Conductor (ohm)	Test Result
	APS2-PSC01		
1	1L1	0.03	P / F / NA
2	2L2	0.02	P / F / NA
3	3L1	0.02	P / F / NA
4	4L1	0.03	P / F / NA
5	1L2	0.01	P / F / NA
6	2L2	0.02	P / F / NA
7	3L2	0.04	P / F / NA
8	4L2	0.02	P / F / NA
9	1L3	0.03	P / F / NA
10	2L3	0.03	P / F / NA
			P / F / NA

Remark: P / F / NA = Pass / Fail / Not Applicable
The Passing Criteria for Reading of Continuity test should be <1Ω

Comment:

Test / Checked By : REW No.: W133567 Grade B+H (Name of CTA Representative)	Name: Ho Tung	Signature:	Date: 9/10/25
Witnessed By : (Name of JEC Representative)	Name: Chung Tip	Signature:	Date: 9/10/25
Witnessed By : (Name of GCL)	Name: Gang Tip	Signature: Gang Tip	Date: 9/10/25
Witnessed By : (Name of AMMJV)	Name: Andy Tang	Signature: Andy Tang	Date: 9/10/25
Witnessed By : (Name of)	Name:	Signature:	Date:
Witnessed By : (Name of)	Name:	Signature:	Date:

Gammon

CTA INTERNATIONAL AS

Air Purification System – HV Power Supply Units Test & Commissioning Report			
Contract No.:	HY/2019/13	RISC No.:	326671A
Project:	Central Kowloon Route - Buildings, Electrical and Mechanical	Date:	9/10/2025
Location:	YVB / HVB / KVB	Room Name:	HV Switch Rm 2
T&C Plan Ref. No:		Page:	
Ref. Dwg. No.:			

Part 3: Inspection and Test for Electrical Installations (Sheet 1 of 5)

A) Continuity Test of ESP DC Earthing Conductor and 0V conductor (TCP Section 4.5.3)

Location: ESP HV Switch Room 01 / 02

Circuit No. or Details of Equipment	Continuity of Conductor (ohm)	Test Result
APS02 - PSC02		
1L1	0.02	P / F / NA
2L1	0.03	P / F / NA
3L1	0.02	P / F / NA
4L1	0.01	P / F / NA
1L2	0.03	P / F / NA
2L2	0.02	P / F / NA
3L2	0.02	P / F / NA
4L2	0.03	P / F / NA
1L3	0.01	P / F / NA
2L3	0.03	P / F / NA
		P / F / NA

Remark: P / F / NA = Pass / Fail / Not Applicable
The Passing Criteria for Reading of Continuity test should be <1Ω

Comment:

Test / Checked By : (Ho Tung) REW No.: W133567 Grade B+H (Name of CTA Representative)	Name: Ho Tung	Signature: Ho Tung	Date: 9/10/25
Witnessed By : (Name of JEC Representative)	Name: Gabriel Zp	Signature: G	Date: 9/10/25
Witnessed By : (Name of GEC)	Name: Gary Zp	Signature: Gary Zp	Date: 9/10/25
Witnessed By : (Name of AMMTV)	Name: Andy Tang	Signature: Andy Tang	Date: 9/10/25
Witnessed By : (Name of)	Name:	Signature:	Date:
Witnessed By : (Name of)	Name:	Signature:	Date:

Gammon

CTA INTERNATIONAL AS

Air Purification System – HV Power Supply Units Test & Commissioning Report			
Contract No.:	HY/2019/13	RISC No.:	32667A
Project:	Central Kowloon Route - Buildings, Electrical and Mechanical	Date:	9/10/2025
Location:	YVB / HVB / KVB	Room Name:	ESP HV Switch Rm 2
T&C Plan Ref. No:		Page:	
Ref. Dwg. No.:			

Part 3: Inspection and Test for Electrical Installations (Sheet 1 of 5)

A) Continuity Test of ESP DC Earthing Conductor and 0V conductor (TCP Section 4.5.3)

Location: ESP HV Switch Room 01 / 02

Circuit No. or Details of Equipment	Continuity of Conductor (ohm)	Test Result
CABLE TRAY AT APS 2	0.05	P / F / NA
		P / F / NA
PSU CABINET 2	0.03	P / F / NA
		P / F / NA
		P / F / NA
		P / F / NA
		P / F / NA
		P / F / NA
		P / F / NA
		P / F / NA
		P / F / NA

Remark: P / F / NA = Pass / Fail / Not Applicable
The Passing Criteria for Reading of Continuity test should be <1Ω

Comment:

Test / Checked By : REW No.: W133567 Grade B+H (Name of CTA Representative)	Name: Ho Tung	Signature: Ho Tung	Date: 9/10/25
Witnessed By : (Name of JEC Representative)	Name: Chung Kp	Signature:	Date: 9/10/25
Witnessed By : (Name of GCL)	Name: Gang Kp	Signature: Gang Kp	Date: 9/10/25
Witnessed By : (Name of AMMTV)	Name: Andy Tang	Signature: Andy Tang	Date: 9/10/25
Witnessed By : (Name of)	Name:	Signature:	Date:
Witnessed By : (Name of)	Name:	Signature:	Date:

Gammon

CTA INTERNATIONAL AS CLEAN TUNNEL AIR

Air Purification System – HV Power Supply Units Test & Commissioning Report			
Contract No.:	HY/2019/13	RISC No.:	32667A
Project:	Central Kowloon Route - Buildings, Electrical and Mechanical	Date:	9/10/2025
Location:	YVB / HVB / KVB	Room Name:	HV Switch Rm 2.
T&C Plan Ref. No:		Page:	
Ref. Dwg. No.:			

Part 3: Inspection and Test for Electrical Installations (Sheet 5 of 5)

E) Bonding Continuity Test

Equipment Description	Equipotential Bonding (Ω)	Supplementary Bonding (Ω)	Test Result
OV AT APS 2	0.12		P / F / NA
ESP DC EARTH AT APS 2	0.12		P / F / NA
			P / F / NA
FENCING WALL AT ESP HV switch Rm 2		0.05	P / F / NA
			P / F / NA
			P / F / NA
			P / F / NA
			P / F / NA
			P / F / NA
			P / F / NA
			P / F / NA
			P / F / NA
			P / F / NA
			P / F / NA
			P / F / NA

Remark: P / F / NA = Pass / Fail / Not Applicable
The Passing Criteria of the Reading of Continuity test should be <1Ω.

Comment:

	Name:	Signature:	Date:
Test / Checked By : REW No.: W135587 Grade B+H (Name of CTA Representative)	Ho Tung	Ho Tung	9/10/25
Witnessed By : (Name of JEC Representative)	Chung Yip		9/10/25
Witnessed By : (Name of GCL)	Chung Yip	Chung Yip	9/10/25
Witnessed By : (Name of AMMJV)	Andy Tang	Andy Tang	9/10/25
Witnessed By : (Name of)			
Witnessed By : (Name of)			

Gammon

CTA INTERNATIONAL AS CLEAN TUNNEL AIR

Air Purification System – HV Power Supply Units Test & Commissioning Report

Contract No.:	HY/2019/13	RISC No.:	33277
Project:	Central Kowloon Route - Buildings, Electrical and Mechanical	Date:	16/4/2025
Location:	YVB / HVB / KVB	Room Name:	APS Plenum 1
T&C Plan Ref. No:		Page:	
Ref. Dwg. No.:			

Part 4 : Functional and Performance Tests for HV Power Supply Units (Sheet 1 of 5)

A) Maximum Voltage Withstand Test for ESP Cell (TCP Section 4.6.1) 1 2 3 4 5

From:	ESP HV Switch Room 01 / 02	To:	APS Plenum No.01 / 02 / 03 Sub-assembly A / B / C / D / E

Step 1 & 3 - Insulation Resistance Test before and after the Maximum Voltage Withstand Test

Items	Circuit No. or Details of Equipment	Insulation Resistance (MΩ)	
		Before Max. Withstand Tests	After Max. Withstand Tests
1	(1st Col. Ionizer to Earth)	256 (Lower 3 ESP Cell) / 228 (Upper 3 ESP Cell)	217 (Lower 3 ESP Cell) / 87 (Upper 3 ESP Cell)
2	(2nd Col. Ionizer to Earth)	229 (Lower 3 ESP Cell) / 228 (Upper 3 ESP Cell)	142 (Lower 3 ESP Cell) / 73.3 (Upper 3 ESP Cell)
3	(3rd Col. Ionizer to Earth)	222 (Lower 3 ESP Cell) / 233 (Upper 3 ESP Cell)	121 (Lower 3 ESP Cell) / 99.6 (Upper 3 ESP Cell)
4	(1st to 3rd Col. Collector the Earth)	~~30.4~~ (1st Col.) / ~~41.8~~ (2nd Col.) / 35.2 (3rd Col.)	102 (1st Col.) / 67.4 (2nd Col.) / 39.9 (3rd Col.)

Step 2 - Maximum Voltage Withstand Test 77.7 68.4

Items	Test Voltage (kV DC)	Duration (min)	Measured Voltage (kV DC) Upper / Lower	Test Result
1	20 (Ionizer)	1	19.85 / 19.94	P / F / NA
2	20 (Ionizer)		19.70 / 19.69	P / F / NA
3	20 (Ionizer)		19.86 / 19.78	P / F / NA
4	8 (Collector)	1	7.23	P / F / NA

B) List of Testing Equipment / Instruments

Type	Model	Serial No	Calibration Cert. No	Date of Cert.
HV insulation tester	AR3125	681931T	KS2502127 8D001	26/02/2025
HV DC Voltage Meter	HVP-40DM	20240071	AC220250303 0801	03/03/2025

Remark: P / F / NA = Pass / Fail / Not Applicable
The passing criteria for the test is passing the insulation test after for maximum voltage withstand test.
The insulation resistance is over 1000MOhm (*) for HV DC Cable and 30MOhm for ESP Cell

Comment:

	Name:	Signature:	Date:
Test / Checked By : REW No.: Grade (Name of CTA Representative)	Ho Tung		16/4/2025
Witnessed By : (Name of JEC Representative)	Lucy Li		16/4/2025
Witnessed By : (Name of GCL)	Crystal Cheung		16/4/2025
Witnessed By : (Name of AMMJV)	Sam Lui		16/4/2025
Witnessed By : (Name of)			
Witnessed By : (Name of)			

~~Before~~ ~~After~~
~~lower Upper Lower Upper~~ } NA
~~1st Col. 42~~
~~2nd Col. 43.5~~
~~3rd Col.~~

Gammon

CTA INTERNATIONAL AS CLEAN TUNNEL AIR

Air Purification System – HV Power Supply Units Test & Commissioning Report			
Contract No.:	HY/2019/13	RISC No.:	32051
Project:	Central Kowloon Route - Buildings, Electrical and Mechanical	Date:	21/03/2025
Location:	YVB / ~~HVB / KVB~~	Room Name:	HV Room 2
T&C Plan Ref. No:	J3883-TVS-S-06283	Page:	
Ref. Dwg. No.:			

Part 3: Inspection and Test for Electrical Installation of ESP Filter (TCP Section 4.5)

Statutory Inspection and Test for LV and HV DC Installation (Sheet 1 of 10)

Items	Description of Inspection	Test Result
A) Visual Inspection (ASD TCP-EE, COP Code 21A/C and COP Appendix 13) - Working Space and Facilities (L.V.)		
a.	Adequacy working space and safe access provided for switch room / electrical facilities.	P / F / NA
b.	Entrance / exit to switch room and/or electrical facilities are free of obstruction.	P / F / NA
c.	Suitable locking facilities provided for switch room and /or electrical facilities.	P / F / NA
d.	Suitable lighting provision provided for switch room and /or electrical facilities.	P / F / NA
e.	Suitable ventilation provision provided for switch room and /or electrical facilities.	P / F / NA
f.	A warning notice 'DANGER — ELECTRICITY, UNAUTHORISED ENTRY PROHIBITED' and '危 險 —— 有電，未經授權不得內進' provided at every entrance of switch room.	P / F / NA
g.	Danger notices, warning notices, schematic diagrams, instructions and similar information are correctly and adequately provided.	P / F / NA
h.	Warning notices for Switch Rooms provided in compliance with EMSD CoP Code 17.	P / F / NA
i.	Warning notices for earthing and main bonding connections provided in compliance with EMSD CoP Code 17.	P / F / NA
j.	All switchgears, distribution boards and electrical equipment properly labelled in compliance with EMSD CoP Code 4D(1).	P / F / NA
k.	Continuity of protective conductors especially the bonding of all exposed conductive parts are satisfactory.	P / F / NA
l.	Logbook provided and work done properly recorded.	P / F / NA
Remark:	P / F / NA = Pass / Fail / Not Applicable	
Comment:		

Test / Checked By : REW No.: Grade (Name of CTA Representative)	Name: Ho Tung	Signature: Ho Tung	Date: 21/03/2025
Witnessed By : (Name of JEC Representative)	Name: CHUNG Up	Signature:	Date: 21/03/2025
Witnessed By : (Name of GCL)	Name: Raymond Lau	Signature:	Date: 21/03/2025
Witnessed By : AMMOV (Name of)	Name: Eric Tang	Signature:	Date: 21/03/25
Witnessed By : (Name of)	Name:	Signature:	Date:
Witnessed By : (Name of)	Name:	Signature:	Date:

Gammon

CIA INTERNATIONAL AS CLEAN TUNNEL AIR

Air Purification System – HV Power Supply Units Test & Commissioning Report			
Contract No.:	HY/2019/13	RISC No.:	32051
Project:	Central Kowloon Route - Buildings, Electrical and Mechanical	Date:	21/03/2025
Location:	YVB / ~~HVB / KVB~~	Room Name:	HV Room 2
T&C Plan Ref. No:	J3883-TVS-S-06283	Page:	
Ref. Dwg. No.:			

Part 3: Inspection and Test for Electrical Installation of ESP Filter (TCP Section 4.5)

Statutory Inspection and Test for LV and HV DC Installation (Sheet 2 of 10)

Items	Description of Inspection	Test Result
B)	**Visual Inspection (ASD TCP-EE, COP Code 21A & C and COP Appendix 13) - Distribution Board (L.V.)**	
a.	No visible damage to impair safety	P / F / NA
b.	No fuse installed in the neutral circuit.	P / F / NA
c.	All live parts screened with an insulating plate or earthed metal	P / F / NA
d.	All exposed metal parts effectively earthed.	P / F / NA
e.	A warning notice 'DANGER' and '危險' provided on the front panel of every distribution board.	P / F / NA
f.	A notice of periodic testing provided at or near the main distribution board incorporating a residual current device.	P / F / NA
g.	Safe access & adequate clearance space provided in compliance with EMSD CoP Code 4E.	P / F / NA
h.	Distribution boards securely mounted on suitable supports.	P / F / NA
i.	A suitable switch provided to control each distribution board.	P / F / NA
j.	Phase Identification for distribution board provided.	P / F / NA
k.	Check the breaking capacity of MCB / RCBO (6kA) in compliance with EMSD CoP Code 9.	P / F / NA
l.	Circuits connected to MCB / RCBO in accordance with the schematic diagram.	P / F / NA

Remark: P / F / NA = Pass / Fail / Not Applicable

Comment:

	Name:	Signature:	Date:
Test / Checked By : REW No.: Grade (Name of CTA Representative)	Ho Tung	Ho Tung	21/03/2025
Witnessed By : (Name of JEC Representative)	Chunyet Tg		21/03/2025
Witnessed By : (Name of GCL)	Raymond Lau		21/03/2025
Witnessed By : (Name of AMMJV)	Eric Tang		21/03/25
Witnessed By : (Name of)			
Witnessed By : (Name of)			

Gammon

CTA INTERNATIONAL AS CLEAN TUNNEL AIR

Air Purification System – HV Power Supply Units Test & Commissioning Report			
Contract No.:	HY/2019/13	RISC No.:	32051
Project:	Central Kowloon Route - Buildings, Electrical and Mechanical	Date:	21/03/2025
Location:	YVB / ~~HVB / KVB~~	Room Name:	HV Room 2
T&C Plan Ref. No:	J3883-TVS-S-06283	Page:	
Ref. Dwg. No.:			

Part 3: Inspection and Test for Electrical Installation of ESP Filter (TCP Section 4.5)

Statutory Inspection and Test for LV and HV DC Installation (Sheet 3 of 10)

Items	Description of Inspection	Test Result
C)	**Visual Inspection (ASD TCP-EE, COP Code 21A & C and COP Appendix 13) - Conductors, Cables and Wirings (L.V.)**	
a.	No visible damage to impair safety.	P / F / NA
b.	All live conductors and their methods of insulation, in relation to design currents of circuits and to the operating currents of the protective devices, are properly selected and erected.	P / F / NA
c.	All cables, flexible cords, switches, plugs and socket outlets, accessories and equipment are found to be in good working conditions.	P / F / NA
d.	All conductors are correctly and securely connected and identified.	P / F / NA
e.	Armoured cables properly terminated by proper cable glands.	P / F / NA
f.	Non-sheathed cables protected by conduit, trunking, ducting or approved mechanical protective means.	P / F / NA
g.	Cables and cable containments, such as tray, ladder, ducting, trunking, conduit, etc., adequately supported.	P / F / NA
h.	Suitable cable lugs used for terminating cables, including termination at distribution board.	P / F / NA
i.	Main cables connected up with correct polarity.	P / F / NA
j.	Cables protected against mechanical damage and suitably supported.	P / F / NA
k.	All exposed metal parts including the armour effectively earthed.	P / F / NA
Remark:	P / F / NA = Pass / Fail / Not Applicable	
Comment:		

Test / Checked By : REW No.: Grade (Name of CTA Representative)	Name: Ho Tung	Signature: Ho Tung	Date: 21/03/2025
Witnessed By : (Name of JEC Representative)	Name: CHUNG	Signature:	Date: 21/03/2025
Witnessed By : (Name of GCL)	Name: Raymond Lau	Signature:	Date: 21/03/2025
Witnessed By : AMMJV (Name of)	Name: Eric Tang	Signature:	Date: 21/03/25
Witnessed By : (Name of)	Name:	Signature:	Date:
Witnessed By : (Name of)	Name:	Signature:	Date:

Gammon

CIA INTERNATIONAL AS

Air Purification System – HV Power Supply Units Test & Commissioning Report			
Contract No.:	HY/2019/13	RISC No.:	32051
Project:	Central Kowloon Route - Buildings, Electrical and Mechanical	Date:	21/03/2025
Location:	YVB ~~/ HVB / KVB~~	Room Name:	HV Room 2
T&C Plan Ref. No:	J3883-TVS-S-06283	Page:	
Ref. Dwg. No.:			

Part 3: Inspection and Test for Electrical Installation of ESP Filter (TCP Section 4.5)

Statutory Inspection and Test for LV and HV DC Installation (Sheet 4 of 10)

Items	Description of Inspection	Test Result
D)	**Visual Inspection (ASD TCP-EE, COP Code 21A and COP Appendix 13) - Final Circuits (L.V.)**	
a.	No visible damage to impair safety	P / F / NA
b.	All non-armoured cables susceptible to damage protected with steel conduit / trunking Bushing and rubber gromment, where necessary, provided.	P / F / NA
c.	Conductor sized to suit the rating of the fuse/ MCB protecting the circuit.	P / F / NA
d.	No cable joint in final circuit.	P / F / NA
e.	All joints of metal conduits or trunking to be mechanically sound, electrically continuous and protected against corrosion.	P / F / NA
f.	All metal conduits, trunking, switch boxes and exposed metal parts effectively earth.	P / F / NA
g.	Earth fault loop impedance and polarities of every outlet checked.	P / F / NA
h.	All fuses and single/double pole switches connected to the phase conductors only with correct polarity.	P / F / NA
i.	Low voltage circuits segregated from extra low voltage circuits.	P / F / NA
j.	Exposed insulated non-sheathed cables with mechanically protected.	P / F / NA
k.	No 2-pin sockets installed. All socket outlets connected with protective conductors and live conductors terminated at correct terminals.	P / F / NA

Remark: P / F / NA = Pass / Fail / Not Applicable

Comment:

Test / Checked By : REW No.: Grade (Name of CTA Representative)	Name: Ho Tung	Signature: Ho Tung	Date: 21/03/2025
Witnessed By : (Name of JEC Representative)	Name: Chung zp	Signature:	Date: 21/03/2025
Witnessed By : (Name of GCL)	Name: Raymond Lau	Signature:	Date: 21/03/2025
Witnessed By : AMMJV (Name of)	Name: Eric Tang	Signature:	Date: 21/03/25
Witnessed By : (Name of)	Name:	Signature:	Date:
Witnessed By : (Name of)	Name:	Signature:	Date:

Gammon

CTA INTERNATIONAL AS

Air Purification System – HV Power Supply Units Test & Commissioning Report			
Contract No.:	HY/2019/13	RISC No.:	32051
Project:	Central Kowloon Route - Buildings, Electrical and Mechanical	Date:	21/03/2025
Location:	YVB ~~/ HVB / KVB~~	Room Name:	HV Room 2
T&C Plan Ref. No:	J3883-TVS-S-06283	Page:	
Ref. Dwg. No.:			

Part 3: Inspection and Test for Electrical Installation of ESP Filter (TCP Section 4.5)

Statutory Inspection and Test for LV and HV DC Installation (Sheet 5 of 10)

Items	Description of Inspection	Test Result
E) Visual Inspection (ASD TCP-EE, COP Code 21A and COP Appendix 13) - Final Circuits (L.V.)		
l.	Final circuits using 13A socket outlets in compliance with EMSD Code 6E.	(P) / F / NA
m.	Where circuit protective conductor is formed by the metallic cable containment enclosure, a separate protective conductor between the earthing terminal of socket outlet and its associated metal box being provided.	(P) / F / NA
n.	Where circuit protective conductor is not formed by the metallic cable containment enclosure, a separate protective conductor to the earthing terminal of socket outlet being provided.	(P) / F / NA
o.	Residual current device having a rated residual operating current not exceeding 30mA provided for all socket outlets.	(P) / F / NA
p.	Minimum sizes of protective conductors are provided as per requirement in EMSD COP Code 11 for limitation of protective conductor impedance.	(P) / F / NA
q.	Means of isolation provided for every fixed appliance.	(P) / F / NA

Remark: P / F / NA = Pass / Fail / Not Applicable

Comment:

Test / Checked By : REW No.: Grade (Name of CTA Representative)	Name: Ho Tung	Signature: Ho Tung	Date: 21/03/2025
Witnessed By : (Name of JEC Representative)	Name: CHUNG IP	Signature:	Date: 21/03/2025
Witnessed By : (Name of GCL)	Name: Raymond Lau	Signature:	Date: 21/03/2025
Witnessed By : (Name of AMMJV)	Name: Eric Tang	Signature:	Date: 21/03/25
Witnessed By : (Name of)	Name:	Signature:	Date:
Witnessed By : (Name of)	Name:	Signature:	Date:

Gammon

CIA INTERNATIONAL AS

Air Purification System – HV Power Supply Units Test & Commissioning Report			
Contract No.:	HY/2019/13	RISC No.:	32051
Project:	Central Kowloon Route - Buildings, Electrical and Mechanical	Date:	21/03/2025
Location:	YVB / ~~HVB / KVB~~	Room Name:	HV Room 2
T&C Plan Ref. No:	J3883-TVS-S-06283	Page:	
Ref. Dwg. No.:			

Part 3: Inspection and Test for Electrical Installation of ESP Filter (TCP Section 4.5)

Statutory Inspection and Test for LV and HV DC Installation (Sheet 6 of 10)

Items	Description of Inspection	Test Result
F)	**Visual Inspection (ASD TCP-EE, COP Code 21A&C and COP Appendix 13) - Earthing and Bonding (L.V.)**	
a.	No visible damage to impair safety.	P / F / NA
b.	All exposed conductive parts of the wiring installation connected to the earthing terminal with appropriate protective conductor.	P / F / NA
c.	Minimum size of protective conductor used in compliance with EMSD CoP Table 11(1).	P / F / NA
d.	Protective conductor up to and including 6mm2 with green and yellow insulation sheath used throughout its length.	P / F / NA
e.	Copper links provided at joints of metallic trunking, forms part of a protective conductor	P / F / NA
f.	A warning notice 'SAFETY ELECTRICAL CONNECTION—DO NOT REMOVE and '安全接地 終端——切勿移去' provided at all main earthing and bonding connections.	P / F / NA
g.	Supplementary equipotential bonding effectively provided between exposed conductive parts and extraneous conductive parts.	P / F / NA
h.	Exposed conductive parts of fixed equipment installed outside equipotential zone effectively earthed for 0.4 sec. disconnection.	P / F / NA
i.	Exposed conductive parts of fixed equipment installed within equipotential zone effectively earthed for 5 sec. disconnection.	P / F / NA
j.	Effectiveness of the main equipotential bonding connection to the main earthing terminal.	P / F / NA
k.	Earthing conductors of adequate size.	P / F / NA
Remark:	P / F / NA = Pass / Fail / Not Applicable	
Comment:		

Test / Checked By : REW No.: Grade (Name of CTA Representative)	Name: Ho Tung	Signature: Ho Tung	Date: 21/03/2025
Witnessed By : (Name of JEC Representative)	Name: Chung Kp	Signature:	Date: 21/03/2025
Witnessed By : (Name of GCL)	Name: Raymond Lau	Signature:	Date: 21/03/2025
Witnessed By : (Name of AMMJ ✓)	Name: Eric Tang	Signature:	Date: 21/03/25
Witnessed By : (Name of)	Name:	Signature:	Date:
Witnessed By : (Name of)	Name:	Signature:	Date:

Gammon

CTA INTERNATIONAL AS CLEAN TUNNEL AIR

Air Purification System – HV Power Supply Units Test & Commissioning Report			
Contract No.:	HY/2019/13	RISC No.:	32051
Project:	Central Kowloon Route - Buildings, Electrical and Mechanical	Date:	21/03/2025
Location:	YVB ~~/ HVB / KVB~~	Room Name:	HV Room 2
T&C Plan Ref. No:	J3883-TVS-S-06283	Page:	
Ref. Dwg. No.:			

Part 3: Inspection and Test for Electrical Installation of ESP Filter (TCP Section 4.5)

Statutory Inspection and Test for LV and HV DC Installation (Sheet 7 of 10)

Items	Description of Inspection	Test Result
G) Conductor Continuity (ASD TCP-EE, COP Code 21B(3) and (4))		
a.	All protective conductors used for equipotential bonding have been tested for continuity.	P / F / NA
b.	All final ring circuit conductors including the protective conductors have been tested for continuity.	P / F / NA
c.	Conductor continuity test results recorded in **relevant Test Form.**	P / F / NA

Remark: P / F / NA = Pass / Fail / Not Applicable

Comment:

Test / Checked By : REW No.: Grade (Name of CTA Representative)	Name: Ho Tung	Signature: Ho Tung	Date: 21/03/2025
Witnessed By : (Name of JEC Representative)	Name: CHUNG ZP	Signature:	Date: 21/03/2025
Witnessed By : (Name of GCL)	Name: Raymond Lau	Signature:	Date: 21/03/2025
Witnessed By : AMNSV (Name of)	Name: Eric Tang	Signature:	Date: 21/03/25
Witnessed By : (Name of)	Name:	Signature:	Date:
Witnessed By : (Name of)	Name:	Signature:	Date:

Gammon

CTA INTERNATIONAL AS

Air Purification System – HV Power Supply Units Test & Commissioning Report			
Contract No.:	HY/2019/13	RISC No.:	32051
Project:	Central Kowloon Route - Buildings, Electrical and Mechanical	Date:	21/03/2025
Location:	YVB / ~~HVB / KVB~~	Room Name:	HV Room 2
T&C Plan Ref. No:	J3883-TVS-S-06283	Page:	
Ref. Dwg. No.:			

Part 3: Inspection and Test for Electrical Installation of ESP Filter (TCP Section 4.5)

Statutory Inspection and Test for LV and HV DC Installation (Sheet 8 of 10)

Items	Description of Inspection	Test Result
H)	**Insulation Resistance (ASD TCP-EE, COP Code 21B(5))**	
a.	The insulation resistance to earth is NOT less than 1 mega ohm.	(P) / F / NA
b.	The insulation resistance between phase/poles is NOT less than 1 mega ohm.	(P) / F / NA
c.	The insulation resistance of equipment between the exposed conductive parts and all live parts is NOT less than 1 mega ohm when tested individually and separately (EMSD COP Code 21B(5)(f)).	(P) / F / NA
d.	Insulation resistance test results recorded in **relevant Test Form.**	(P) / F / NA

Remark: P / F / NA = Pass / Fail / Not Applicable

Comment:

Test / Checked By : REW No.: Grade (Name of CTA Representative)	Name: Ho Tung	Signature: Ho Tung	Date: 21/03/2025
Witnessed By : (Name of JEC Representative)	Name: CHUNG	Signature:	Date: 21/03/2025
Witnessed By : (Name of GCL)	Name: Raymond Lau	Signature:	Date: 21/03/2025
Witnessed By : (Name of AMNJV)	Name: Eric Tang	Signature:	Date: 21/03/25
Witnessed By : (Name of)	Name:	Signature:	Date:
Witnessed By : (Name of)	Name:	Signature:	Date:

Gammon

CTA INTERNATIONAL AS CLEAN TUNNEL AIR

Air Purification System – HV Power Supply Units Test & Commissioning Report			
Contract No.:	HY/2019/13	RISC No.:	32051
Project:	Central Kowloon Route - Buildings, Electrical and Mechanical	Date:	21/03/2025
Location:	YVB ~~/ HVB / KVB~~	Room Name:	HV Room 2
T&C Plan Ref. No:	J3883-TVS-S-06283	Page:	
Ref. Dwg. No.:			

Part 3: Inspection and Test for Electrical Installation of ESP Filter (TCP Section 4.5)

Statutory Inspection and Test for LV and HV DC Installation (Sheet 9 of 10)

Items	Description of Inspection	Test Result
I)	**Polarity (ASD TCP-EE, COP Code 21B(6))**	
a.	All fuses and single-poles devices are connected in the phase conductors only.	P / F / NA
b.	All wiring has been correctly connected to socket outlets and, etc.	P / F / NA
c.	Polarity Check results recorded in **relevant Test Form.**	P / F / NA

Remark: P / F / NA = Pass / Fail / Not Applicable

Comment:

Test / Checked By : REW No.: Grade (Name of CTA Representative)	Name: Ho Tung	Signature: Ho Tung	Date: 21/03/2025
Witnessed By : (Name of JEC Representative)	Name: CHUNG	Signature:	Date: 21/03/2025
Witnessed By : (Name of GCL)	Name: Raymond Lau	Signature:	Date: 21/03/2025
Witnessed By : (Name of AMMJV)	Name: Eric Tang	Signature:	Date: 21/03/25
Witnessed By : (Name of)	Name:	Signature:	Date:
Witnessed By : (Name of)	Name:	Signature:	Date:

Gammon

CTA INTERNATIONAL AS CLEAN TUNNEL AIR

Air Purification System – HV Power Supply Units Test & Commissioning Report			
Contract No.:	HY/2019/13	RISC No.:	32051
Project:	Central Kowloon Route - Buildings, Electrical and Mechanical	Date:	21/03/2025
Location:	YVB / ~~HVB / KVB~~	Room Name:	HV Room 2
T&C Plan Ref. No:	J3883-TVS-S-06283	Page:	
Ref. Dwg. No.:			

Part 3: Inspection and Test for Electrical Installation of ESP Filter (TCP Section 4.5)

Statutory Inspection and Test for LV and HV DC Installation (Sheet 10 of 10)

Items	Description of Inspection	Test Result
J) Functional Testing of All Devices Including Protective Devices (ASD TCP-EE, COP Code 21B(9))		
a.	Simulation tests on the operation of devices for earth fault protection are satisfactory.	P / F / NA
b.	50% of the rated tripping current shall not cause the residual current circuit breaker to open.	P / F / NA
c.	100% of the rated tripping current shall cause the residual current circuit breaker to open within 300ms or at any delay time declared by the manufacture of the devices.	P / F / NA
d.	Where the residual current circuit breaker has a rated tripping current not exceeding 30mA and has been installed to reduce the risk associated with direct contact, a residual current of 150mA should cause the circuit breaker to open within 40ms.	P / F / NA
e.	In no event should the test current be applied for a period exceeding one second	P / F / NA
f.	Breakers, moulded case circuit breakers, air circuit breakers, fused switches, switch-fuses and protective relays, etc. are satisfactory.	P / F / NA
g.	Hand operation on all items of equipment such as isolators, switch and protective relays, etc. are satisfactory.	P / F / NA
h.	Hand operation on all items of equipment such as isolators, switches and indicative devices are satisfactory.	P / F / NA
i.	Functional test of all devices including protective devices had been recorded in **relevant Test Form.**	P / F / NA
Remark: P / F / NA = Pass / Fail / Not Applicable		
Comment:		

Test / Checked By : REW No.: Grade (Name of CTA Representative)	Name: Ho Tung	Signature: Ho Tung	Date: 21/03/2025
Witnessed By : (Name of JEC Representative)	Name: Chekwan Zp	Signature:	Date: 21/03/2025
Witnessed By : (Name of GCL)	Name: Raymond Lau	Signature:	Date: 21/03/2025
Witnessed By : (Name of AMMJV)	Name: Eric Tang	Signature:	Date: 21/03/25
Witnessed By : (Name of)	Name:	Signature:	Date:
Witnessed By : (Name of)	Name:	Signature:	Date:

Gammon

CTA INTERNATIONAL AS CLEAN TUNNEL AIR

Air Purification System – HV Power Supply Units Test & Commissioning Report			
Contract No.:	HY/2019/13	RISC No.:	33300
Project:	Central Kowloon Route - Buildings, Electrical and Mechanical	Date:	17/04/2025
Location:	TVB / HVB / KVB	Room Name:	Plenum 2
T&C Plan Ref. No:	J3883-TVS-S-06283	Page:	
Ref. Dwg. No.:			

Part 4 : Functional and Performance Tests for HV Power Supply Units (Sheet 1 of 5)

A) Maximum Voltage Withstand Test for ESP Cell (TCP Section 4.6.1)

From:	ESP HV Switch Room 01 / 02	To:	APS Plenum No.01 / 02 / 03 Sub-assembly A / B / C / D / E

Step 1 & 3 - Insulation Resistance Test before and after the Maximum Voltage Withstand Test

Items	Circuit No. or Details of Equipment	Insulation Resistance (MΩ)	
		Before Max. Withstand Tests	After Max. Withstand Tests
1	(1st Col. Ionizer to Earth)	57.5 (Lower 3 ESP Cell) / 49.5 (Upper 3 ESP Cell)	45.0 (Lower 3 ESP Cell) / 55.7 (Upper 3 ESP Cell)
2	(2nd Col. Ionizer to Earth)	78.1 (Lower 3 ESP Cell) / 55.3 (Upper 3 ESP Cell)	99 (Lower 3 ESP Cell) / 178 (Upper 3 ESP Cell)
3	(3rd Col. Ionizer to Earth)	71.8 (Lower 3 ESP Cell) / 57.7 (Upper 3 ESP Cell)	56.0 (Lower 3 ESP Cell) / 51.4 (Upper 3 ESP Cell)
4	(1st to 3rd Col. Collector the Earth)	30.3 (1st Col.) / 33.1 (2nd Col.) / 38.6 (3rd Col.)	32.3 (1st Col.) / 39.4 (2nd Col.) / 46.2 (3rd Col.)

Step 2 - Maximum Voltage Withstand Test

Items	Test Voltage (kV DC)	Duration (min)	Measured Voltage (kV DC)	Test Result
1	20 (Ionizer)	1	19.94 / 20.08	P / F / NA
2	20 (Ionizer)		19.92 / 19.89	P / F / NA
3	20 (Ionizer)		19.91 / 20.14	P / F / NA
4	8 (Collector)	1	7.22	P / F / NA

B) List of Testing Equipment / Instruments

Type	Model	Serial No	Calibration Cert. No	Date of Cert.
HV insulation tester	AR3125	6819355	KS2525021278D001	26/02/2025
HV DC Voltage Meter	HVP-40DM	20240071	AC20250503080 1	03/03/2025

Remark: P / F / NA = Pass / Fail / Not Applicable
The passing criteria for the test is passing the insulation test after for maximum voltage withstand test.
The insulation resistance is over 1000MOhm (*) for HV DC Cable and 30MOhm for ESP Cell

Comment:

	Name:	Signature:	Date:
Test / Checked By : REW No.: Grade (Name of CTA Representative)	Ho Tung		17/04/2025
Witnessed By : (Name of JEC Representative)	CHUNG		17/04/2025
Witnessed By : (Name of GCL)	Raymond Lau		17/4/2025
Witnessed By : (Name of AMNJV)	Sam Lau		17/4/2025
Witnessed By : (Name of)			
Witnessed By : (Name of)			

Gammon

CTA INTERNATIONAL AS CLEAN TUNNEL AIR

Air Purification System – HV Power Supply Units Test & Commissioning Report

Contract No.:	HY/2019/13	RISC No.:	33300
Project:	Central Kowloon Route - Buildings, Electrical and Mechanical	Date:	17/4/2025
Location:	YVB / HVB / KVB	Room Name:	Plenum 2
T&C Plan Ref. No:	J3883-TVS-S-06283	Page:	
Ref. Dwg. No.:			

Part 4 : Functional and Performance Tests for HV Power Supply Units (Sheet 1 of 5)

A) Maximum Voltage Withstand Test for ESP Cell (TCP Section 4.6.1)

From:	ESP HV Switch Room 01 / 02	To:	APS Plenum No.01 / 02 / 03 Sub-assembly A / B / C / D / E

Step 1 & 3 - Insulation Resistance Test before and after the Maximum Voltage Withstand Test

Items	Circuit No. or Details of Equipment	Insulation Resistance (MΩ)	
		Before Max. Withstand Tests	After Max. Withstand Tests
1	(1st Col. Ionizer to Earth)	115 / 90.1 (Lower 3 ESP Cell) (Upper 3 ESP Cell)	91.6 / 82.3 (Lower 3 ESP Cell) (Upper 3 ESP Cell)
2	(2nd Col. Ionizer to Earth)	197 / 78 (Lower 3 ESP Cell) (Upper 3 ESP Cell)	217 / 69.9 (Lower 3 ESP Cell) (Upper 3 ESP Cell)
3	(3rd Col. Ionizer to Earth)	97.2 / 59.9 (Lower 3 ESP Cell) (Upper 3 ESP Cell)	80.1 / 55.3 (Lower 3 ESP Cell) (Upper 3 ESP Cell)
4	(1st to 3rd Col. Collector the Earth)	60.1 / 38.2 / 62.4 (1st Col.) (2nd Col.) (3rd Col.)	75.3 / 47.9 / 63.3 (1st Col.) (2nd Col.) (3rd Col.)

Step 2 - Maximum Voltage Withstand Test

Items	Test Voltage (kV DC)	Duration (min)	Measured Voltage (kV DC)	Test Result
1	20 (Ionizer)	1	19.83 / 20.05	P / F / NA
2	20 (Ionizer)		19.75 / 19.96	P / F / NA
3	20 (Ionizer)		19.96 / 20.17	P / F / NA
4	8 (Collector)	1	7.23	P / F / NA

B) List of Testing Equipment / Instruments

Type	Model	Serial No	Calibration Cert. No	Date of Cert.
HV insulation tester	AR3125	6819355	KS2525021278D001	26/02/2025
HV DC Voltage Meter	HVP-40DM	20240071	AC22025050308 01	03/03/2025

Remark: P / F / NA = Pass / Fail / Not Applicable
The passing criteria for the test is passing the insulation test after for maximum voltage withstand test.
The insulation resistance is over 1000MOhm (*) for HV DC Cable and 30MOhm for ESP Cell

Comment:

Test / Checked By : REW No.: Grade (Name of CTA Representative)	Name: Ho Tung	Signature:	Date: 17/04/2025
Witnessed By : (Name of JEC Representative)	Name: CHUNG	Signature:	Date: 17/04/2025
Witnessed By : (Name of GCL)	Name: Raymond Lau	Signature:	Date: 17/4/2025
Witnessed By : (Name of AMMJV)	Name: Sam Lai	Signature:	Date: 17/4/2025
Witnessed By : (Name of)	Name:	Signature:	Date:
Witnessed By : (Name of)	Name:	Signature:	Date:

Gammon

CTA INTERNATIONAL AS CLEAN TUNNEL AIR

Air Purification System – HV Power Supply Units Test & Commissioning Report			
Contract No.:	HY/2019/13	RISC No.:	33300
Project:	Central Kowloon Route - Buildings, Electrical and Mechanical	Date:	17/4/2025
Location:	YVB / HVB / KVB	Room Name:	Plenum 2
T&C Plan Ref. No:	J3883-TVS-S-06283	Page:	
Ref. Dwg. No.:			

Part 4 : Functional and Performance Tests for HV Power Supply Units (Sheet 1 of 5)

A) Maximum Voltage Withstand Test for ESP Cell (TCP Section 4.6.1)

From:	ESP HV Switch Room 01 / 02	To:	APS Plenum No.01 / 02 / 03 Sub-assembly A / B / C / D / E

Step 1 & 3 - Insulation Resistance Test before and after the Maximum Voltage Withstand Test

Items	Circuit No. or Details of Equipment	Insulation Resistance (MΩ)	
		Before Max. Withstand Tests	After Max. Withstand Tests
1	(1st Col. Ionizer to Earth)	324 (Lower 3 ESP Cell) / 89.5 (Upper 3 ESP Cell)	117 (Lower 3 ESP Cell) / 90.2 (Upper 3 ESP Cell)
2	(2nd Col. Ionizer to Earth)	212 (Lower 3 ESP Cell) / 99.6 (Upper 3 ESP Cell)	162 (Lower 3 ESP Cell) / 85.1 (Upper 3 ESP Cell)
3	(3rd Col. Ionizer to Earth)	101.6 (Lower 3 ESP Cell) / 95.1 (Upper 3 ESP Cell)	134 (Lower 3 ESP Cell) / 98.2 (Upper 3 ESP Cell)
4	(1st to 3rd Col. Collector the Earth)	76.9 (1st Col.) / 49.5 (2nd Col.) / 43.4 (3rd Col.)	102 (1st Col.) / 52.4 (2nd Col.) / 41.7 (3rd Col.)

Step 2 - Maximum Voltage Withstand Test

Items	Test Voltage (kV DC)	Duration (min)	Measured Voltage (kV DC)	Test Result
1	20 (Ionizer)	1	19.94 / 20.04	P / F / NA
2	20 (Ionizer)		19.85 / 20.14	P / F / NA
3	20 (Ionizer)		19.81 / 20.21	P / F / NA
4	8 (Collector)	1	7.22	P / F / NA

B) List of Testing Equipment / Instruments

Type	Model	Serial No	Calibration Cert. No	Date of Cert.
HV Insulation tester	AR3125	6819355	KS2525021278D001	26/02/2025
HV DC Voltage Meter	HVP-40DM	20240071	ACZ20250503080 1	03/03/2025

Remark: P / F / NA = Pass / Fail / Not Applicable
The passing criteria for the test is passing the insulation test after for maximum voltage withstand test.
The insulation resistance is over 1000MOhm (*) for HV DC Cable and 30MOhm for ESP Cell

Comment:

Test / Checked By : REW No.: Grade (Name of CTA Representative)	Name: Ho Tung	Signature:	Date: 17/04/2025
Witnessed By : (Name of JEC Representative)	Name: CHUNG ZP	Signature:	Date: 17/04/2025
Witnessed By : (Name of GCL)	Name: Raymond Lau	Signature:	Date: 17/4/2025
Witnessed By : (Name of AMTS)	Name: Sam Lau	Signature:	Date: 17/4/2025
Witnessed By : (Name of)	Name:	Signature:	Date:
Witnessed By : (Name of)	Name:	Signature:	Date:

Gammon

CTA INTERNATIONAL AS

Air Purification System – HV Power Supply Units Test & Commissioning Report			
Contract No.:	HY/2019/13	RISC No.:	33300
Project:	Central Kowloon Route - Buildings, Electrical and Mechanical	Date:	17/4/2025
Location:	YVB / HVB / KVB	Room Name:	Plenum 2
T&C Plan Ref. No:	53833-TVS-S-06283	Page:	
Ref. Dwg. No.:			

Part 4 : Functional and Performance Tests for HV Power Supply Units (Sheet 1 of 5)

A) Maximum Voltage Withstand Test for ESP Cell (TCP Section 4.6.1)

From:	ESP HV Switch Room 01 / 02	To:	APS Plenum No.01 / 02 / 03 Sub-assembly A / B / C / D / E

Step 1 & 3 - Insulation Resistance Test before and after the Maximum Voltage Withstand Test

Items	Circuit No. or Details of Equipment	Insulation Resistance (MΩ)	
		Before Max. Withstand Tests	After Max. Withstand Tests
1	(1st Col. Ionizer to Earth)	118 (Lower 3 ESP Cell) / 59.8 (Upper 3 ESP Cell)	110 (Lower 3 ESP Cell) / 56.6 (Upper 3 ESP Cell)
2	(2nd Col. Ionizer to Earth)	79.6 (Lower 3 ESP Cell) / 70.6 (Upper 3 ESP Cell)	75.3 (Lower 3 ESP Cell) / 64.5 (Upper 3 ESP Cell)
3	(3rd Col. Ionizer to Earth)	95 (Lower 3 ESP Cell) / 82.4 (Upper 3 ESP Cell)	102.2 (Lower 3 ESP Cell) / 84.3 (Upper 3 ESP Cell)
4	(1st to 3rd Col. Collector the Earth)	43.7 (1st Col.) / 50.5 (2nd Col.) / 41.0 (3rd Col.)	51.2 (1st Col.) / 59.1 (2nd Col.) / 49.5 (3rd Col.)

Step 2 - Maximum Voltage Withstand Test

Items	Test Voltage (kV DC)	Duration (min)	Measured Voltage (kV DC)	Test Result
1	20 (Ionizer)	1	19.70 / 19.68	P / F / NA
2	20 (Ionizer)		19.74 / 19.92	P / F / NA
3	20 (Ionizer)		19.80 / 20.06	P / F / NA
4	8 (Collector)	1	7.22	P / F / NA

B) List of Testing Equipment / Instruments

Type	Model	Serial No	Calibration Cert. No	Date of Cert.
HV insulation tester	AR3125	6819355	KS2S2502127800001	26/02/2025
HV DC Voltage Meter	HVP-40DM	2024007	AC2202505030801	03/03/2025

Remark: P / F / NA = Pass / Fail / Not Applicable
The passing criteria for the test is passing the insulation test after for maximum voltage withstand test.
The insulation resistance is over 1000MOhm (*) for HV DC Cable and 30MOhm for ESP Cell

Comment:

	Name:	Signature:	Date:
Test / Checked By : REW No.: Grade (Name of CTA Representative)	Ho Tom		17/04/2025
Witnessed By : (Name of JEC Representative)	CHUNG YP		17/04/2025
Witnessed By : (Name of GCL)	Raymond Lau		17/4/2025
Witnessed By : (Name of AMSL)	Sam Li		17/4/2025
Witnessed By : (Name of)			
Witnessed By : (Name of)			

Gammon

CTA INTERNATIONAL AS

Air Purification System – HV Power Supply Units Test & Commissioning Report			
Contract No.:	HY/2019/13	RISC No.:	33300
Project:	Central Kowloon Route - Buildings, Electrical and Mechanical	Date:	17/4/2025
Location:	YVB / HVB / KVB	Room Name:	Plenum 2
T&C Plan Ref. No:	J5883-TVS-S-06253	Page:	
Ref. Dwg. No.:			

Part 4 : Functional and Performance Tests for HV Power Supply Units (Sheet 1 of 5)

A) Maximum Voltage Withstand Test for ESP Cell (TCP Section 4.6.1)

From:	ESP HV Switch Room 01 / 02	To:	APS Plenum No.01 / 02 / 03 Sub-assembly A / B / C / D / E

Step 1 & 3 - Insulation Resistance Test before and after the Maximum Voltage Withstand Test

Items	Circuit No. or Details of Equipment	Insulation Resistance (MΩ)	
		Before Max. Withstand Tests	After Max. Withstand Tests
1	(1st Col. Ionizer to Earth)	76.1 (Lower 3 ESP Cell) / 67.3 (Upper 3 ESP Cell)	81.8 (Lower 3 ESP Cell) / 66.6 (Upper 3 ESP Cell)
2	(2nd Col. Ionizer to Earth)	58.7 (Lower 3 ESP Cell) / 65.9 (Upper 3 ESP Cell)	65.1 (Lower 3 ESP Cell) / 62.0 (Upper 3 ESP Cell)
3	(3rd Col. Ionizer to Earth)	55.3 (Lower 3 ESP Cell) / 63.3 (Upper 3 ESP Cell)	64.2 (Lower 3 ESP Cell) / 73.4 (Upper 3 ESP Cell)
4	(1st to 3rd Col. Collector the Earth)	33.9 (1st Col.) / 45.4 (2nd Col.) / 39 (3rd Col.)	42.7 (1st Col.) / 61.7 (2nd Col.) / 66.5 (3rd Col.)

Step 2 - Maximum Voltage Withstand Test

Items	Test Voltage (kV DC)	Duration (min)	Measured Voltage (kV DC)	Test Result
1	20 (Ionizer)	1	19.83 / 19.85	P / F / NA
2	20 (Ionizer)		19.84 / 20.09	P / F / NA
3	20 (Ionizer)		19.99 / 19.88	P / F / NA
4	8 (Collector)	1	7.23	P / F / NA

B) List of Testing Equipment / Instruments

Type	Model	Serial No	Calibration Cert. No	Date of Cert.
HV insulation tester	AR3125	6819355	KS2525021278D001	26/02/2025
HV DC Voltage Meter	HVP-40DM	20240071	AC2202505030801	03/03/2025

Remark: P / F / NA = Pass / Fail / Not Applicable
The passing criteria for the test is passing the insulation test after for maximum voltage withstand test.
The insulation resistance is over 1000MOhm (*) for HV DC Cable and 30MOhm for ESP Cell

Comment:

	Name:	Signature:	Date:
Test / Checked By : REW No.: Grade (Name of CTA Representative)	HO Tung		17/04/2025
Witnessed By : (Name of JEC Representative)	CHUNG ZP		17/04/2025
Witnessed By : (Name of GCL)	Raymond Lau		17/4/2025
Witnessed By : (Name of AMTS)	Sam Lui		17/4/2025
Witnessed By : (Name of)			
Witnessed By : (Name of)			

Gammon

CTA INTERNATIONAL AS CLEAN TUNNEL AIR

Air Purification System – HV Power Supply Units Test & Commissioning Report			
Contract No.:	HY/2019/13	RISC No.:	33300A
Project:	Central Kowloon Route - Buildings, Electrical and Mechanical	Date:	17/4/25
Location:	YVB / HVB / KVB	Room Name:	
T&C Plan Ref. No:	J3883-TVS-S-06283	Page:	
Ref. Dwg. No.:			

Part 4 : Functional and Performance Tests for HV Power Supply Units (Sheet 2A of 5)

C) ESP HV Power Supply Cabinets Information

Cabinets ID:	Y VB-APS2-ESP-PSC-01	Main Switch Rating:	80A
Location:	ESP HV Switch Room 01 / 02	Fed From:	

D) Output Voltage Measurement for HV Power Supply Units (TCP Section 4.6.2)

Item	Circuit No. or Details of Equipment	Vol-meter Reading at PSU (kV)	Am-meter Reading of PSU (mA)	Measured Voltage (kV) at ESP	Result (see remark)
1	Y VB-APS2-PSU-01A Subassembly 14 kV (I1)	14	72.2	14	P / F
2	Y VB-APS2-PSU-02A Subassembly 14 kV (I2)	14	71.4	14	P / F
3	Y VB-APS2-PSU-03A Subassembly 14 kV (I3)	14	71.8	14	P / F
4	Y VB-APS2-PSU-04A Subassembly 6.5 kV (C)	6.5	10.5	6.5	P / F
5	Y VB-APS2-PSU-05B Subassembly 14 kV (I1)	14	72.1	14	P / F
6	Y VB-APS2-PSU-06B Subassembly 14 kV (I2)	14	72.6	14	P / F
7	Y VB-APS2-PSU-07B Subassembly 14 kV (I3)	14	71.5	14	P / F
8	Y VB-APS2-PSU-08B Subassembly 6.5 kV (C)	6.5	10.8	6.5	P / F
9	Y VB-APS2-PSU-09C Subassembly 14 kV (I1)	14	69.4	14	P / F
10	Y VB-APS2-PSU-10C Subassembly 14 kV (I2)	14	70.8	14	P / F

E) List of Testing Equipment / Instruments

Type	Model	Serial No	Calibration Cert. No	Date of Cert.
DC Voltage Meter	HVP-40DM	~~20230668~~	~~ZD202508111226~~	~~11/08/2025~~
		20240071	ACZ20250303801	03/03/2025

Remark: P / F = Pass / Fail, measured output voltage for ionizer and for collector is ±14kV ±5% 6.5kV ±5%

Comment:

Test / Checked By : REW No.: W133567 Grade B+H (Name of CTA Representative)	Name: Ho Tung	Signature: Ho Tung	Date: 17 APR 2025
Witnessed By : (Name of JEC Representative)	Name: John Chan	Signature:	Date: 17 APR 2025
Witnessed By : (Name of GCL)	Name: Boris Yan	Signature:	Date: 17 APR 2025
Witnessed By : (Name of AMMJV)	Name: Tam Wing Kit	Signature:	Date: 17 APR 2025
Witnessed By : (Name of EMSD)	Name: WONG Cheong Shing CIE/TSC/1	Signature:	Date: 17 APR 2025
Witnessed By : (Name of)	Name:	Signature:	Date:

Gammon

CTA INTERNATIONAL AS CLEAN TUNNEL AIR

Air Purification System – HV Power Supply Units Test & Commissioning Report			
Contract No.:	HY/2019/13	RISC No.:	33300 A
Project:	Central Kowloon Route - Buildings, Electrical and Mechanical	Date:	17/4/25
Location:	YVB / HVB / KVB	Room Name:	
T&C Plan Ref. No:	J3883-TVS-S-06283	Page:	
Ref. Dwg. No.:			

Part 4 : Functional and Performance Tests for HV Power Supply Units (Sheet 2B of 5)

C) ESP HV Power Supply Cabinets Information

Cabinets ID:	Y VB-APS 2 -ESP-PSC-0 2	Main Switch Rating:	80A
Location:	ESP HV Switch Room 01 / 02	Fed From:	

D) Output Voltage Measurement for HV Power Supply Units (TCP Section 4.6.2)

Item	Circuit No. or Details of Equipment	Vol-meter Reading at PSU (kV)	Am-meter Reading of PSU (mA)	Measured Voltage (kV) at ESP	Result (see remark)
1	Y VB-APS 2 -PSU-11C Subassembly 14 kV (I3)	14	71.8	14	P / F
2	Y VB-APS 2 -PSU-12C Subassembly 6.5 kV (C)	6.5	10.7	6.5	P / F
3	Y VB-APS 2 -PSU-13D Subassembly 14 kV (I1)	14	72.4	14	P / F
4	Y VB-APS 2 -PSU-14D Subassembly 14 kV (I2)	14	69.8	14	P / F
5	Y VB-APS 2 -PSU-15D Subassembly 14 kV (I3)	14	69.2	14	P / F
6	Y VB-APS 2 -PSU-16D Subassembly 6.5 kV (C)	6.5	10.5	6.5	P / F
7	Y VB-APS 2 -PSU-17E Subassembly 14 kV (I1)	14	71.6	14	P / F
8	Y VB-APS 2 -PSU-18E Subassembly 14 kV (I2)	14	72.3	14	P / F
9	Y VB-APS 2 -PSU-19E Subassembly 14 kV (I3)	14	70.4	14	P / F
10	Y VB-APS 2 -PSU-20E Subassembly 6.5 kV (C)	6.5	10.9	6.5	P / F

E) List of Testing Equipment / Instruments

Type	Model	Serial No	Calibration Cert. No	Date of Cert.
DC Voltage Meter	HVP-40DM	~~20230668~~	~~ZD202508111226~~	~~11/08/2025~~
		20240071	ACR20250303080 1	03/03/2025

Remark: P / F = Pass / Fail, measured output voltage for ionizer and for collector is±14kV ±5% 6.5kV ±5%

Comment:

Test / Checked By : REW No.: W133567 Grade B+H (Name of CTA Representative)	Name: Ho Tung	Signature:	Date: 17 APR 2025
Witnessed By : (Name of JEC Representative)	Name: John Chan	Signature:	Date: 17 APR 2025
Witnessed By : (Name of GCL)	Name: Boris Yan	Signature:	Date: 17 APR 2025
Witnessed By : (Name of AMMJV)	Name: Tam Wing kit	Signature:	Date: 17 APR 2025
Witnessed By : (Name of EMSD)	Name: WONG Cheong Shing CIE/TSC/1	Signature:	Date: 17 APR 2025
Witnessed By : (Name of)	Name:	Signature:	Date:

Gammon

CTA INTERNATIONAL AS CLEAN TUNNEL AIR

Air Purification System – HV Power Supply Units Test & Commissioning Report			
Contract No.:	HY/2019/13	RISC No.:	33300 A
Project:	Central Kowloon Route - Buildings, Electrical and Mechanical	Date:	17/4/25
Location:	(YVB) HVB / KVB	Room Name:	
T&C Plan Ref. No:	J3883-TVS-S-06283	Page:	
Ref. Dwg. No.:			

Part 4 : Functional and Performance Tests for HV Power Supply Units (Sheet 4A of 5)

G) Functional Test for the Constant Current Control Mode Cabinets ID: Y VB-APS 2 -ESP-PSC-0 2

(TCP Section 4.6.4)

Item	Equipment Description	Functional Test for Constant Current Control Mode				
		Before Earth Fault Simulation		During Earth Fault Simulation		Constant Output Current Observed on PSU *
		"CC" not light up	Output Current on PSU	"CC" light up	Output Current on PSU	
1	Y VB-APS 2 -PSU-11C Subassembly 14 kV (I3)	(P) / F	71.6 mA	(P) / F	0 mA	(P) / F
2	Y VB-APS 2 -PSU-12C Subassembly 6.5 kV (C)	(P) / F	10.5 mA	(P) / F	0 mA	(P) / F
3	Y VB-APS 2 -PSU-13D Subassembly 14 kV (I1)	(P) / F	72.3 mA	(P) / F	0 mA	(P) / F
4	Y VB-APS 2 -PSU-14D Subassembly 14 kV (I2)	(P) / F	69.8 mA	(P) / F	0 mA	(P) / F
5	Y VB-APS 2 -PSU-15D Subassembly 14 kV (I3)	(P) / F	72.1 mA	(P) / F	0 mA	(P) / F
6	Y VB-APS 2 -PSU-16D Subassembly 6.5 kV (C)	(P) / F	10.7 mA	(P) / F	0 mA	(P) / F
7	Y VB-APS 2 -PSU-17E Subassembly 14 kV (I1)	(P) / F	72.6 mA	(P) / F	0 mA	(P) / F
8	Y VB-APS 2 -PSU-18E Subassembly 14 kV (I2)	(P) / F	69.4 mA	(P) / F	0 mA	(P) / F
9	Y VB-APS 2 -PSU-19E Subassembly 14 kV (I3)	(P) / F	70.2 mA	(P) / F	0 mA	(P) / F
10	Y VB-APS 2 -PSU-20E Subassembly 6.5 kV (C)	(P) / F	10.9 mA	(P) / F	0 mA	(P) / F

Remarks: P / F = Pass / Fail,
* Acceptance Criteria for Output Current during the Earth Fault Simulation is ± 5% of before the Fault

Comment:

Test / Checked By : REW No.: W133567 Grade B+H (Name of CTA Representative)	Name: Ho Tung	Signature: Ho Tung	Date: 17 APR 2025
Witnessed By : (Name of JEC Representative)	Name: John Chan	Signature:	Date: 17 APR 2025
Witnessed By : (Name of GCL)	Name: Boris Yan	Signature:	Date: 17 APR 2025
Witnessed By : (Name of AMMTV)	Name: Tam Wing Kit	Signature:	Date: 17 APR 2025
Witnessed By : (Name of EMSD)	Name: WONG Cheong Shing CIE/TSC/1	Signature:	Date: 17 APR 2025
Witnessed By : (Name of)	Name:	Signature:	Date:

Gammon

CTA INTERNATIONAL AS

Air Purification System – HV Power Supply Units Test & Commissioning Report			
Contract No.:	HY/2019/13	RISC No.:	33300A
Project:	Central Kowloon Route - Buildings, Electrical and Mechanical	Date:	17/4/25
Location:	YVB / HVB / KVB	Room Name:	
T&C Plan Ref. No:	J3883-TVS-S-06283	Page:	
Ref. Dwg. No.:			

Part 4 : Functional and Performance Tests for HV Power Supply Units (Sheet 4B of 5)

G) Functional Test for the Constant Current Control Mode Cabinets ID: YVB-APS2-ESP-PSC-01

(TCP Section 4.6.4)

Item	Equipment Description	Functional Test for Constant Current Control Mode				
		Before Earth Fault Simulation		During Earth Fault Simulation		Constant Output Current Observed on PSU *
		"CC" not light up	Output Current on PSU	"CC" light up	Output Current on PSU	
1	Y VB-APS2-PSU-01A Subassembly 14kV (I1)	(P) / F	70.4 mA	(P) / F	0 mA	(P) / F
2	Y VB-APS2-PSU-02A Subassembly 14kV (I2)	(P) / F	71.6 mA	(P) / F	0 mA	(P) / F
3	Y VB-APS2-PSU-03A Subassembly 14kV (I3)	(P) / F	69.2 mA	(P) / F	0 mA	(P) / F
4	Y VB-APS2-PSU-04A Subassembly 6.5kV (C)	(P) / F	10.5 mA	(P) / F	0 mA	(P) / F
5	Y VB-APS2-PSU-05B Subassembly 14kV (I1)	(P) / F	72.5 mA	(P) / F	0 mA	(P) / F
6	Y VB-APS2-PSU-06B Subassembly 14kV (I2)	(P) / F	70.9 mA	(P) / F	0 mA	(P) / F
7	Y VB-APS2-PSU-07B Subassembly 14kV (I3)	(P) / F	69.5 mA	(P) / F	0 mA	(P) / F
8	Y VB-APS2-PSU-08B Subassembly 6.5kV (C)	(P) / F	10.9 mA	(P) / F	0 mA	(P) / F
9	Y VB-APS2-PSU-09C Subassembly 14kV (I1)	(P) / F	72.1 mA	(P) / F	0 mA	(P) / F
10	Y VB-APS2-PSU-10C Subassembly 14kV (I2)	(P) / F	70.3 mA	(P) / F	0 mA	(P) / F

Remarks: P / F = Pass / Fail,
* Acceptance Criteria for Output Current during the Earth Fault Simulation is ± 5% of before the Fault

Comment:

Test / Checked By : REW No.: W133567 Grade B+H (Name of CTA Representative)	Name: Ho Tung	Signature: Ho Tung	Date: 17 APR 2025
Witnessed By : (Name of JEC Representative)	Name: John Chan	Signature:	Date: 17 APR 2025
Witnessed By : (Name of GCL)	Name: Boris Yan	Signature:	Date: 17 APR 2025
Witnessed By : (Name of AMMJV)	Name: Tam Wing Kit	Signature:	Date: 17 APR 2025
Witnessed By : (Name of EMSD)	Name: WONG Cheong Shing CIE/TSC/1	Signature:	Date: 17 APR 2025
Witnessed By : (Name of)	Name:	Signature:	Date:

Gammon

CTA INTERNATIONAL AS CLEAN TUNNEL AIR

Air Purification System – HV Power Supply Units Test & Commissioning Report			
Contract No.:	HY/2019/13	RISC No.:	32045
Project:	Central Kowloon Route - Buildings, Electrical and Mechanical	Date:	21/03/2025
Location:	YVB / HVB / KVB	Room Name:	Plenum 3
T&C Plan Ref. No:	J3883-TVS-S-06283	Page:	
Ref. Dwg. No.:			

Part 1 : Installation Inspection of ESP HV Power Supply Cabinets (Sheet 1 of 3)			
A) ESP HV Power Supply Cabinets Information			
Cabinets ID:	YVB-APS3-ESP-PSC-01	Main Switch Rating:	~~63A~~ 80A
Location:	ESP HV Switch Room 01 / 02	Supply Fed From:	YVB-DB-ESP03

B) Visual Inspection for ESP HV Power Supply Cabinets (TCP Section 4.3.1)		
Items	**Description of Inspection**	**Test Result**
a.	Verify cabinets are installed per the accepted ESP HV Switch Room layout and plant room details	P / F / NA
b.	Check clearance space (≥1400mm front, ≥600mm rear) per EMSD CoP	P / F / NA
c.	Ensure cabinets are securely fixed, sealed, and free of damage, corrosion, wear, or dust	P / F / NA
d.	Check that the cabinet door, door handle and lock are installed and operated properly	P / F / NA
C) Visual Inspection for Cabinet Top Cooling Units (TCP Section 4.3.2)		
a.	Check that the cabinet top cooling units are without visual damage, corrosion or sign of wear and tear	P / F / NA
b.	Check that the cabinet top cooling unit is securely fixed on top of the cabinets according to the accepted shop drawing and fabrication drawing	P / F / NA
c.	Check the exhaust lourve of the cabinet cooling unit to ensure no obstructions or blockages	P / F / NA
d.	Check the internal air duct is connected properly with the cabinet top cooling unit	P / F / NA
e.	Check the cable connection between cabinet and cooling unit are completed properly	P / F / NA
Remark:	P / F / NA = Pass / Fail / Not Applicable	
Comment:		

Test / Checked By : REW No.: Grade (Name of CTA Representative)	Name: Ho Tung	Signature:	Date: 21/03/2025
Witnessed By : (Name of JEC Representative)	Name: CHUNG TP	Signature:	Date: 21/03/2025
Witnessed By : (Name of GCL)	Name: Raymond Lau	Signature:	Date: 21/03/2025
Witnessed By : (Name of AMNJV)	Name: Sam Lui	Signature:	Date: 21/03/2025
Witnessed By : (Name of)	Name:	Signature:	Date:
Witnessed By : (Name of)	Name:	Signature:	Date:

Gammon

CTA INTERNATIONAL AS

Air Purification System – HV Power Supply Units Test & Commissioning Report			
Contract No.:	HY/2019/13	RISC No.:	32045
Project:	Central Kowloon Route - Buildings, Electrical and Mechanical	Date:	21/03/2025
Location:	YVB / HVB / KVB	Room Name:	Plenum 3
T&C Plan Ref. No:	J3883-TVS-S-06283	Page:	
Ref. Dwg. No.:			

Part 1 : Installation Inspection of ESP HV Power Supply Cabinets (Sheet 2 of 3)		
Items	**Description of Inspection**	**Test Result**
D) Visual Inspection for ESP HV Power Supply Units (TCP Section 4.3.3)		
a.	No visible damage to impair safety	P / F / NA
b.	Check that the ESP HV power supply units are securely fixed inside the Power Supply Cabinet with no physical damage, or signs of deterioration	P / F / NA
c.	Check and record the equipment ID, manufacturer, model number, serial number and other information, showing on the name plate for cabinet top cooling unit and ESP HV power supply units, and record it the initial installed location on the test form	P / F / NA
E) Visual Inspection for Accessories inside the Cabinet (TCP Section 4.3.4)		
a.	Check that the limit switch is securely fixed on rear door of the cabinet with proper cabling works	P / F / NA
Remark: P / F / NA = Pass / Fail / Not Applicable		
Comment:		

Test / Checked By : REW No.: Grade (Name of CTA Representative)	Name: Ho Tung	Signature:	Date: 21/03/2025
Witnessed By : (Name of JEC Representative)	Name: CHUNG	Signature:	Date: 21/03/2025
Witnessed By : (Name of GCL)	Name: Raymond Lau	Signature:	Date: 21/3/2025
Witnessed By : (Name of AMSU)	Name: Sam Lui	Signature:	Date: 21/03/2025
Witnessed By : (Name of)	Name:	Signature:	Date:
Witnessed By : (Name of)	Name:	Signature:	Date:

Gammon

CTA INTERNATIONAL AS CLEAN TUNNEL AIR

Air Purification System – HV Power Supply Units Test & Commissioning Report			
Contract No.:	HY/2019/13	RISC No.:	32045
Project:	Central Kowloon Route - Buildings, Electrical and Mechanical	Date:	21/03/2025
Location:	YVB / HVB / KVB	Room Name:	Plenum 3
T&C Plan Ref. No:	J3883- TVS-S- 06283	Page:	
Ref. Dwg. No.:			

Part 1 : Installation Inspection of ESP HV Power Supply Cabinets (Sheet 1 of 3)			
A) ESP HV Power Supply Cabinets Information			
Cabinets ID:	YVB-APS3-ESP-PSC-02	Main Switch Rating:	~~63A~~ 80
Location:	ESP HV Switch Room 01 / 02	Supply Fed From:	YVB-DB-ESP03

B) Visual Inspection for ESP HV Power Supply Cabinets (TCP Section 4.3.1)		
Items	**Description of Inspection**	**Test Result**
a.	Verify cabinets are installed per the accepted ESP HV Switch Room layout and plant room details	P / F / NA
b.	Check clearance space (≥1400mm front, ≥600mm rear) per EMSD CoP	P / F / NA
c.	Ensure cabinets are securely fixed, sealed, and free of damage, corrosion, wear, or dust	P / F / NA
d.	Check that the cabinet door, door handle and lock are installed and operated properly	P / F / NA
C) Visual Inspection for Cabinet Top Cooling Units (TCP Section 4.3.2)		
a.	Check that the cabinet top cooling units are without visual damage, corrosion or sign of wear and tear	P / F / NA
b.	Check that the cabinet top cooling unit is securely fixed on top of the cabinets according to the accepted shop drawing and fabrication drawing	P / F / NA
c.	Check the exhaust lourve of the cabinet cooling unit to ensure no obstructions or blockages	P / F / NA
d.	Check the internal air duct is connected properly with the cabinet top cooling unit	P / F / NA
e.	Check the cable connection between cabinet and cooling unit are completed properly	P / F / NA
Remark:	P / F / NA = Pass / Fail / Not Applicable	
Comment:		

Test / Checked By : REW No.: Grade (Name of CTA Representative)	Name: Ho Tung	Signature:	Date: 21/03/2025
Witnessed By : (Name of JEC Representative)	Name: CHUNG IP	Signature:	Date: 21/03/2025
Witnessed By : (Name of GCL)	Name: Raymond Law	Signature:	Date: 21/03/2025
Witnessed By : (Name of AMNSV)	Name: Sam Lui	Signature:	Date: 21/03/2025
Witnessed By : (Name of)	Name:	Signature:	Date:
Witnessed By : (Name of)	Name:	Signature:	Date:

Gammon

CTA INTERNATIONAL AS CLEAN TUNNEL AIR

Air Purification System – HV Power Supply Units Test & Commissioning Report			
Contract No.:	HY/2019/13	RISC No.:	32045
Project:	Central Kowloon Route - Buildings, Electrical and Mechanical	Date:	21/03/2025
Location:	YVB / HVB / KVB	Room Name:	Plenum 3
T&C Plan Ref. No:	J3883-TVS-S-06283	Page:	
Ref. Dwg. No.:			

Part 1 : Installation Inspection of ESP HV Power Supply Cabinets (Sheet 2 of 3)		
Items	**Description of Inspection**	**Test Result**
D) Visual Inspection for ESP HV Power Supply Units (TCP Section 4.3.3)		
a.	No visible damage to impair safety	P / F / NA
b.	Check that the ESP HV power supply units are securely fixed inside the Power Supply Cabinet with no physical damage, or signs of deterioration	P / F / NA
c.	Check and record the equipment ID, manufacturer, model number, serial number and other information, showing on the name plate for cabinet top cooling unit and ESP HV power supply units, and record it the initial installed location on the test form	P / F / NA
E) Visual Inspection for Accessories inside the Cabinet (TCP Section 4.3.4)		
a.	Check that the limit switch is securely fixed on rear door of the cabinet with proper cabling works	P / F / NA
Remark: P / F / NA = Pass / Fail / Not Applicable		
Comment:		

Test / Checked By : REW No.: Grade (Name of CTA Representative)	Name: Ho Tung	Signature:	Date: 21/03/2025
Witnessed By : (Name of JEC Representative)	Name: CHUNG	Signature:	Date: 21/03/2025
Witnessed By : (Name of GCL)	Name: Raymond Lau	Signature:	Date: 21/03/2025
Witnessed By : (Name of AMANJV)	Name: Sam Lui	Signature:	Date: 21/03/2025
Witnessed By : (Name of)	Name:	Signature:	Date:
Witnessed By : (Name of)	Name:	Signature:	Date:

Gammon

CTA INTERNATIONAL AS CLEAN TUNNEL AIR

Air Purification System – HV Power Supply Units Test & Commissioning Report			
Contract No.:	HY/2019/13	RISC No.:	032046
Project:	Central Kowloon Route - Buildings, Electrical and Mechanical	Date:	25/03/2025
Location:	YVB / HVB / KVB	Room Name:	Plenum 3
T&C Plan Ref. No:	33883-TWS-S-06283	Page:	
Ref. Dwg. No.:			

Part 2: Installation Inspection and Cable Tests for HV DC Cables (Sheet 1 of 2)

A) Visual Inspection (TCP Section 4.4.1)

Items	Description of Inspection	Test Result
a)	No visible damage to impair safety	P / F / NA
b)	Ensure all cables, HV connectors, cable glands & accessories are in good condition	P / F / NA
c)	All conductors are correctly and securely connected and identified, protected against mechanical damage, and adequately supported	P / F / NA

B) HV DC Cable Continuity Tests (TCP Section 4.4.2)

From:	ESP HV Switch Room 01 / 02	To:	APS Plenum No.01 / 02 / 03 Sub-assembly A / B / C / D / E

Items	Circuit No. or Details of Equipment	Cable Length	Continuity Resistance (Ω) Measured	Calculated	Passing Criteria	Test Result
1	YVB-APS3-HVC-7 Ionizer 3	26.9m	0.56	0.28	0.66	P / F / NA
2	YVB-APS3-HVC-6 Ionizer 2	26.6m		0.28	0.65	P / F / NA
3	YVB-APS3-HVC-5 Ionizer 1	26.3m	0.50	0.25	0.64	P / F / NA
4	YVB-APS3-HVC-8 Collector	25.4m		0.25	0.62	P / F / NA

C) List of Testing Equipment / Instruments

Type	Model	Serial No	Calibration Cert. No	Date of Cert.
Digital Micro Ohmmeter	UT620CT	C242921984	AC220250220127	22/02/2025
Cable fault test	LCT268-2(KM)	250219005	AC220250303 0802	22/02/2025

Remark: P / F / NA = Pass / Fail / Not Applicable
Insulation Resistance should be >1000MΩ, Continuity Resistance shall be < 0.0245Ω/m **(B)**

Comment:

Test / Checked By : REW No.: Grade (Name of CTA Representative)	Name: Ho Tung	Signature:	Date: 25/03/2025
Witnessed By : (Name of JEC Representative)	Name: CHUNG ZP	Signature:	Date: 25/03/2025
Witnessed By : (Name of GCL)	Name: Raymond Lau	Signature:	Date: 25/03/2025
Witnessed By : (Name of AMSU)	Name: Sam Lui	Signature:	Date: 25/03/2025
Witnessed By : (Name of)	Name:	Signature:	Date:
Witnessed By : (Name of)	Name:	Signature:	Date:

Gammon

CTA INTERNATIONAL AS CLEAN TUNNEL AIR

Air Purification System – HV Power Supply Units Test & Commissioning Report			
Contract No.:	HY/2019/13	RISC No.:	032046
Project:	Central Kowloon Route - Buildings, Electrical and Mechanical	Date:	25/03/2025
Location:	YVB / HVB / KVB	Room Name:	Plenum 3
T&C Plan Ref. No:	J3883-TUS-S-06283	Page:	
Ref. Dwg. No.:			

Part 2: Installation Inspection and Cable Tests for HV DC Cables (Sheet 1 of 2)

A) Visual Inspection (TCP Section 4.4.1)

Items	Description of Inspection	Test Result
a)	No visible damage to impair safety	P / F / NA
b)	Ensure all cables, HV connectors, cable glands & accessories are in good condition	P / F / NA
c)	All conductors are correctly and securely connected and identified, protected against mechanical damage, and adequately supported	P / F / NA

B) HV DC Cable Continuity Tests (TCP Section 4.4.2)

From: ESP HV Switch Room 01 / 02 To: APS Plenum No.01 / 02 / 03 Sub-assembly A / B / C / D / E

Items	Circuit No. or Details of Equipment	Cable Length	Continuity Resistance (Ω) Measured	Calculated	Passing Criteria	Test Result
1	YVB-APS3-HVC-11 Ionizer 3	29.5m	0.71	0.36	0.72	P / F / NA
2	YVB-APS3-HVC-10 Ionizer 2	29.0m		0.35	0.71	P / F / NA
3	YVB-APS3-HVC-9 Ionizer 1	27.5m	0.59	0.30	0.61	P / F / NA
4	YVB-APS3-HVC-12 Collector	26.0m		0.29	0.66	P / F / NA

C) List of Testing Equipment / Instruments

Type	Model	Serial No	Calibration Cert. No	Date of Cert.
Digital Micro Ohmmeter	UT620C+	C242921984	AC220250220127	22/02/2025
Cable fault test	LCT268-2(KM)	25021900S	AC220250303080	22/02/2025

Remark: P / F / NA = Pass / Fail / Not Applicable
Insulation Resistance should be >1000MΩ, Continuity Resistance shall be < 0.0245Ω/m **(B)**

Comment:

Test / Checked By : REW No.: Grade (Name of CTA Representative)	Name: Ho Tung	Signature:	Date: 25/03/2025
Witnessed By : (Name of JEC Representative)	Name: CHUNG	Signature:	Date: 25/03/2025
Witnessed By : (Name of GCL)	Name: Raymond Lau	Signature:	Date: 25/03/2025
Witnessed By : (Name of AMASU)	Name: Sam Lui	Signature:	Date: 25/03/2025
Witnessed By : (Name of)	Name:	Signature:	Date:
Witnessed By : (Name of)	Name:	Signature:	Date:

Gammon

CTA INTERNATIONAL AS CLEAN TUNNEL AIR

Air Purification System – HV Power Supply Units Test & Commissioning Report			
Contract No.:	HY/2019/13	RISC No.:	032046
Project:	Central Kowloon Route - Buildings, Electrical and Mechanical	Date:	25/03/2025
Location:	YVB / HVB / KVB	Room Name:	Plenum 3
T&C Plan Ref. No:	53883-TVS-S-06293	Page:	
Ref. Dwg. No.:			

Part 2: Installation Inspection and Cable Tests for HV DC Cables (Sheet 1 of 2)

A) Visual Inspection (TCP Section 4.4.1)

Items	Description of Inspection	Test Result
a)	No visible damage to impair safety	P / F / NA
b)	Ensure all cables, HV connectors, cable glands & accessories are in good condition	P / F / NA
c)	All conductors are correctly and securely connected and identified, protected against mechanical damage, and adequately supported	P / F / NA

B) HV DC Cable Continuity Tests (TCP Section 4.4.2)

From: ESP HV Switch Room 01 / 02 To: APS Plenum No.01 / 02 / 03 Sub-assembly A / B / C / D / E

Items	Circuit No. or Details of Equipment	Cable Length	Continuity Resistance (Ω) Measured	Calculated	Passing Criteria	Test Result
1	YVB-APS3-HVC-15 Ionizer 3	31.9m	0.89	0.45	0.78	P / F / NA
2	YVB-APS3-HVC-14 Ionizer 2	31.3m		0.44	0.77	P / F / NA
3	YVB-APS3-HVC-13 Ionizer 1	29.8m	0.77	0.39	0.73	P / F / NA
4	YVB-APS3-HVC-16 Collector	29.8m		0.39	0.73	P / F / NA

C) List of Testing Equipment / Instruments

Type	Model	Serial No	Calibration Cert. No	Date of Cert.
Digital Micro Ohmmeter	UT620C+	C242921984	AC220250220127	22/02/2025
Cable fault test	LCT268-2(KM)	250219005	AC220250308002	22/02/2025

Remark: P / F / NA = Pass / Fail / Not Applicable
Insulation Resistance should be >1000MΩ, Continuity Resistance shall be < 0.0245Ω/m **(B)**

Comment:

Test / Checked By : REW No.: Grade (Name of CTA Representative)	Name: Ho Tung	Signature:	Date: 25/03/2025
Witnessed By : (Name of JEC Representative)	Name: CHANG	Signature:	Date: 25/03/2025
Witnessed By : (Name of GCL)	Name: Raymond Lau	Signature:	Date: 25/03/2025
Witnessed By : (Name of AMMJV)	Name: Sam Lui	Signature:	Date: 25/03/2025
Witnessed By : (Name of)	Name:	Signature:	Date:
Witnessed By : (Name of)	Name:	Signature:	Date:

Gammon

CTA INTERNATIONAL AS

Air Purification System – HV Power Supply Units Test & Commissioning Report			
Contract No.:	HY/2019/13	RISC No.:	032046
Project:	Central Kowloon Route - Buildings, Electrical and Mechanical	Date:	25/03/2025
Location:	YVB / HVB / KVB	Room Name:	Plenum 3
T&C Plan Ref. No:	J3883-TVS-S-06283	Page:	
Ref. Dwg. No.:			

Part 2: Installation Inspection and Cable Tests for HV DC Cables (Sheet 1 of 2)

A) Visual Inspection (TCP Section 4.4.1)

Items	Description of Inspection	Test Result
a)	No visible damage to impair safety	P / F / NA
b)	Ensure all cables, HV connectors, cable glands & accessories are in good condition	P / F / NA
c)	All conductors are correctly and securely connected and identified, protected against mechanical damage, and adequately supported	P / F / NA

B) HV DC Cable Continuity Tests (TCP Section 4.4.2)

From: ESP HV Switch Room 01 / 02 To: APS Plenum No.01 / 02 / 03 Sub-assembly A / B / C / D / E

Items	Circuit No. or Details of Equipment	Cable Length	Continuity Resistance (Ω)			Test Result
			Measured	Calculated	Passing Criteria	
1	YVB-APS3-HVC-19 Ionizer 3	33.1m	0.94	0.48	0.81	P / F / NA
2	YVB-APS3-HVC-18 Ionizer 2	32.2m		0.46	0.79	P / F / NA
3	YVB-APS3-HVC-17 Ionizer 1	32.5m	0.94	0.47	0.80	P / F / NA
4	YVB-APS3-HVC-20 Collector	32.2m		0.47	0.79	P / F / NA

C) List of Testing Equipment / Instruments

Type	Model	Serial No	Calibration Cert. No	Date of Cert.
Digital Micro Ohmeter	UT620CF	C242921984	AC220250222 0127	22/02/2025
Cable fault test	LCT268-2(KM)	250219005	AC220250303 0802	22/02/2025

Remark: P / F / NA = Pass / Fail / Not Applicable
Insulation Resistance should be >1000MΩ, Continuity Resistance shall be < 0.0245Ω/m **(B)**

Comment:

Test / Checked By : REW No.: Grade (Name of CTA Representative)	Name: Ho Tung	Signature:	Date: 25/03/2025
Witnessed By : (Name of JEC Representative)	Name: CHUNG TP	Signature:	Date: 25/03/2025
Witnessed By : (Name of GCL)	Name: Raymond Law	Signature:	Date: 25/03/2025
Witnessed By : (Name of AMMSU)	Name: Sam Lui	Signature:	Date: 25/03/2025
Witnessed By : (Name of)	Name:	Signature:	Date:
Witnessed By : (Name of)	Name:	Signature:	Date:

Gammon

CTA INTERNATIONAL AS CLEAN TUNNEL AIR

Air Purification System – HV Power Supply Units Test & Commissioning Report			
Contract No.:	HY/2019/13	RISC No.:	32046
Project:	Central Kowloon Route - Buildings, Electrical and Mechanical	Date:	21/3/2025
Location:	YVB / HVB / KVB	Room Name:	Plenum 3
T&C Plan Ref. No:	J3883-TVS-S-06283	Page:	
Ref. Dwg. No.:			

Part 2: Installation Inspection and Cable Tests for HV DC Cables (2 of 2)

D) Maximum Voltage Withstand Test for HV DC Cable (TCP Section 4.4.3)

Step 1 & 3 - Insulation Resistance Test before and after the Maximum Voltage Withstand Test

From:	ESP HV Switch Room 01 / 02	To:	APS Plenum No.01 / 02 / 03 Sub-assembly A / B / C / D / E

Items	Circuit No. or Details of Equipment	Cable Length	Insulation Resistance (MΩ) before Step 2	Insulation Resistance (MΩ) after Step 2	Test Result
1	YVB-APS3-HVC-3 Ionizer 3	25.4m	400GΩ	400GΩ	P / F / NA
2	YVB-APS3-HVC-2 Ionizer 2	24.9m	400GΩ	400GΩ	P / F / NA
3	YVB-APS3-HVC-1 Ionizer 1	24.6m	400GΩ	400GΩ	P / F / NA
4	YVB-APS3-HVC-4 Collector	24.0m	400GΩ	400GΩ	P / F / NA

Step 2 - Maximum Voltage Withstand Test

Items	Circuit No. or Details of Equipment	Test Voltage (kV DC)	Duration (Min)	Measured Voltage
1	YVB-APS3-HVC-3 Ionizer 3	20	1	20.19 kV
2	YVB-APS3-HVC-2 Ionizer 2	20	1	20.19 kV
3	YVB-APS3-HVC-1 Ionizer 1	20	1	20.08 kV
4	YVB-APS3-HVC-4 Collector	20	1	20.19 kV

E) List of Testing Equipment / Instruments

Type	Model	Serial No	Calibration Cert. No	Date of Cert.
HV insulation tester	AR3125	6819355	KS25250212780001	26/02/2025
HV DC Voltage Meter	HVP-40DM	20240071	ACZ20250503080	03/03/2025

Remark: P / F / NA = Pass / Fail / Not Applicable,
The passing criteria for the test is passing the insulation test after for maximum voltage withstand test.
The insulation resistance is over 1000MOhm (*) for HV DC Cable and 30MOhm for ESP Cell

Comment:

	Name:	Signature:	Date:
Test / Checked By : REW No.: Grade (Name of CTA Representative)	Ho Tung		21/03/2025
Witnessed By : (Name of JEC Representative)	CHUNG		21/03/2025
Witnessed By : (Name of GCL)	Raymond Lau		21/3/2025
Witnessed By : (Name of AMMSV)	Sam Lui		21/3/2025
Witnessed By : (Name of)			
Witnessed By : (Name of)			

Gammon

CTA INTERNATIONAL AS

Air Purification System – HV Power Supply Units Test & Commissioning Report			
Contract No.:	HY/2019/13	RISC No.:	32046
Project:	Central Kowloon Route - Buildings, Electrical and Mechanical	Date:	21/03/2025
Location:	YVB / HVB / KVB	Room Name:	Plenum 3
T&C Plan Ref. No:	J3883-TVS-S-06283	Page:	
Ref. Dwg. No.:			

Part 2: Installation Inspection and Cable Tests for HV DC Cables (2 of 2)

D) Maximum Voltage Withstand Test for HV DC Cable (TCP Section 4.4.3)

Step 1 & 3 - Insulation Resistance Test before and after the Maximum Voltage Withstand Test

From:	ESP HV Switch Room 01 / 02	To:	APS Plenum No.01 / 02 / 03 Sub-assembly A / B / C / D / E

Items	Circuit No. or Details of Equipment	Cable Length	Insulation Resistance (MΩ) before Step 2	Insulation Resistance (MΩ) after Step 2	Test Result
1	YVB-APS3-HVC-7 Ionizer 3	26.9m	270GΩ	300GΩ	P / F / NA
2	YVB-APS3-HVC-6 Ionizer 2	26.6m	400GΩ	400GΩ	P / F / NA
3	YVB-APS3-HVC-5 Ionizer 1	26.3m	400GΩ	400GΩ	P / F / NA
4	YVB-APS3-HVC-8 Collector	25.4m	400GΩ	400GΩ	P / F / NA

Step 2 - Maximum Voltage Withstand Test

Items	Circuit No. or Details of Equipment	Test Voltage (kV DC)	Duration (Min)	Measured Voltage
1	YVB-APS3-HVC-7 Ionizer 3	20	1	20.19 kV
2	YVB-APS3-HVC-6 Ionizer 2	20	1	20.17 kV
3	YVB-APS3-HVC-5 Ionizer 1	20	1	20.18 kV
4	YVB-APS3-HVC-8 Collector	20	1	20.19 kV

E) List of Testing Equipment / Instruments

Type	Model	Serial No	Calibration Cert. No	Date of Cert.
HV insulation tester	AR3125	6819355	KSZS25021278D001	26/02/2025
HV DC Voltage Meter	HVP-40DM	20240071	ACZ20250503801	03/03/2025

Remark: P / F / NA = Pass / Fail / Not Applicable,
The passing criteria for the test is passing the insulation test after for maximum voltage withstand test.
The insulation resistance is over 1000MOhm (*) for HV DC Cable and 30MOhm for ESP Cell

Comment:

	Name:	Signature:	Date:
Test / Checked By : REW No.: Grade (Name of CTA Representative)	Ho Tung		21/03/2025
Witnessed By : (Name of JEC Representative)	CHUNG		21/03/2025
Witnessed By : (Name of GCL)	Raymond Lau		21/03/2025
Witnessed By : (Name of AMMSV)	Sam Lui		21/3/2025
Witnessed By : (Name of)			
Witnessed By : (Name of)			

Gammon

CTA INTERNATIONAL AS CLEAN TUNNEL AIR

Air Purification System – HV Power Supply Units Test & Commissioning Report			
Contract No.:	HY/2019/13	RISC No.:	32046
Project:	Central Kowloon Route - Buildings, Electrical and Mechanical	Date:	21/03/2025
Location:	YVB / HVB / KVB	Room Name:	Plenum 3
T&C Plan Ref. No:	J3883-TVS-S-06283	Page:	
Ref. Dwg. No.:			

Part 2: Installation Inspection and Cable Tests for HV DC Cables (2 of 2)

D) Maximum Voltage Withstand Test for HV DC Cable (TCP Section 4.4.3)

Step 1 & 3 - Insulation Resistance Test before and after the Maximum Voltage Withstand Test

From:	ESP HV Switch Room 01 / 02	To:	APS Plenum No.01 / 02 / 03 Sub-assembly A / B / C / D / E

Items	Circuit No. or Details of Equipment	Cable Length	Insulation Resistance (MΩ) before Step 2	Insulation Resistance (MΩ) after Step 2	Test Result
1	YVB-APS3-HVC-11 Ionizer 3	29.5m	400GΩ	400GΩ	P / F / NA
2	YVB-APS3-HVC-10 Ionizer 2	29.0m	400GΩ	400GΩ	P / F / NA
3	YVB-APS3-HVC-9 Ionizer 1	27.5m	200GΩ	300GΩ	P / F / NA
4	YVB-APS3-HVC-12 Collector	26.9m	200GΩ	300GΩ	P / F / NA

Step 2 - Maximum Voltage Withstand Test

Items	Circuit No. or Details of Equipment	Test Voltage (kV DC)	Duration (Min)	Measured Voltage
1	YVB-APS3-HVC-11 Ionizer 3	20	1	20.18 kV
2	YVB-APS3-HVC-10 Ionizer 2	20	1	20.18 kV
3	YVB-APS3-HVC-9 Ionizer 1	20	1	20.19 kV
4	YVB-APS3-HVC-12 Collector	20	1	20.18 kV

E) List of Testing Equipment / Instruments

Type	Model	Serial No	Calibration Cert. No	Date of Cert.
HV insulation tester	AR3125	68/9355	KS252502127 8D001	26/02/2025
HV DC Voltage Meter	HVP-40DM	20240071	ACZ20250503 0801	03/03/2025

Remark: P / F / NA = Pass / Fail / Not Applicable,
The passing criteria for the test is passing the insulation test after for maximum voltage withstand test.
The insulation resistance is over 1000MOhm (*) for HV DC Cable and 30MOhm for ESP Cell

Comment:

	Name:	Signature:	Date:
Test / Checked By : REW No.: Grade (Name of CTA Representative)	Ho Tung		21/03/2025
Witnessed By : (Name of JEC Representative)	CHUNG ZP		21/03/2025
Witnessed By : (Name of GCL)	Raymond Lau		21/03/2025
Witnessed By : (Name of AMSV)	Sam Lai		21/3/2025
Witnessed By : (Name of)			
Witnessed By : (Name of)			

Gammon

CTA INTERNATIONAL AS CLEAN TUNNEL AIR

Air Purification System – HV Power Supply Units Test & Commissioning Report			
Contract No.:	HY/2019/13	RISC No.:	32046
Project:	Central Kowloon Route - Buildings, Electrical and Mechanical	Date:	21/03/2025
Location:	YVB / HVB / KVB	Room Name:	Plenum 3
T&C Plan Ref. No:	T3883-TVS-S-06283	Page:	
Ref. Dwg. No.:			

Part 2: Installation Inspection and Cable Tests for HV DC Cables (2 of 2)

D) Maximum Voltage Withstand Test for HV DC Cable (TCP Section 4.4.3)

Step 1 & 3 - Insulation Resistance Test before and after the Maximum Voltage Withstand Test

From:	ESP HV Switch Room 01 / 02	To:	APS Plenum No.01 / 02 / 03 Sub-assembly A / B / C / D / E

Items	Circuit No. or Details of Equipment	Cable Length	Insulation Resistance (MΩ) before Step 2	Insulation Resistance (MΩ) after Step 2	Test Result
1	Y VB-APS 3 -HVC- 15 Ionizer 3	31.9m	200GΩ	300GΩ	P / F / NA
2	Y VB-APS 3 -HVC- 14 Ionizer 2	31.3m	200GΩ	300GΩ	P / F / NA
3	Y VB-APS 3 -HVC- 13 Ionizer 1	29.8m	200GΩ	300GΩ	P / F / NA
4	Y VB-APS 3 -HVC- 16 Collector	29.8m	300GΩ	300GΩ	P / F / NA

Step 2 - Maximum Voltage Withstand Test

Items	Circuit No. or Details of Equipment	Test Voltage (kV DC)	Duration (Min)	Measured Voltage
1	Y VB-APS 3 -HVC- 15 Ionizer 3	20	1	20.19 kV
2	Y VB-APS 3 -HVC- 14 Ionizer 2	20	1	20.18 kV
3	Y VB-APS 3 -HVC- 13 Ionizer 1	20	1	20.17 kV
4	Y VB-APS 3 -HVC- 16 Collector	20	1	20.18 kV

E) List of Testing Equipment / Instruments

Type	Model	Serial No	Calibration Cert. No	Date of Cert.
HV insulation tester	AR3125	6819355	KS2525021278D001	26/02/2025
HV DC Voltage Meter	HVP-40DM	20240071	AC2202505030 8D1	03/03/2025

Remark: P / F / NA = Pass / Fail / Not Applicable,
The passing criteria for the test is passing the insulation test after for maximum voltage withstand test.
The insulation resistance is over 1000MOhm (*) for HV DC Cable and 30MOhm for ESP Cell

Comment:

	Name:	Signature:	Date:
Test / Checked By : REW No.: Grade (Name of CTA Representative)	Ho Tim		21/03/2025
Witnessed By : (Name of JEC Representative)	CHUNG		21/03/2025
Witnessed By : (Name of GCL)	Raymond Lau		21/03/2025
Witnessed By : (Name of AMMJV)	Sam Lui		21/3/2025
Witnessed By : (Name of)			
Witnessed By : (Name of)			

Gammon

CTA INTERNATIONAL AS CLEAN TUNNEL AIR

Air Purification System – HV Power Supply Units Test & Commissioning Report			
Contract No.:	HY/2019/13	RISC No.:	32046
Project:	Central Kowloon Route - Buildings, Electrical and Mechanical	Date:	21/3/2025
Location:	YVB / HVB / KVB	Room Name:	Plenum 3
T&C Plan Ref. No:	J5883-TUS-S-06283	Page:	
Ref. Dwg. No.:			

Part 2: Installation Inspection and Cable Tests for HV DC Cables (2 of 2)

D) Maximum Voltage Withstand Test for HV DC Cable (TCP Section 4.4.3)

Step 1 & 3 - Insulation Resistance Test before and after the Maximum Voltage Withstand Test

From:	ESP HV Switch Room 01 / 02	To:	APS Plenum No.01 / 02 / 03 Sub-assembly A / B / C / D / E

Items	Circuit No. or Details of Equipment	Cable Length	Insulation Resistance (MΩ) before Step 2	Insulation Resistance (MΩ) after Step 2	Test Result
1	YVB-APS3-HVC-19 Ionizer 3	33.1m	300 GΩ	300GΩ	P / F / NA
2	YVB-APS3-HVC-18 Ionizer 2	32.2m	300GΩ	300 GΩ	P / F / NA
3	YVB-APS3-HVC-17 Ionizer 1	32.5m	300GΩ	300GΩ	P / F / NA
4	YVB-APS3-HVC-20 Collector	32.2m	300 GΩ	300GΩ	P / F / NA

Step 2 - Maximum Voltage Withstand Test

Items	Circuit No. or Details of Equipment	Test Voltage (kV DC)	Duration (Min)	Measured Voltage
1	YVB-APS3-HVC-19 Ionizer 3	20	1	20.18 kV
2	YVB-APS3-HVC-18 Ionizer 2	20	1	20.18 kV
3	YVB-APS3-HVC-17 Ionizer 1	20	1	20.18 kV
4	YVB-APS3-HVC-20 Collector	20	1	20.18 kV

E) List of Testing Equipment / Instruments

Type	Model	Serial No	Calibration Cert. No	Date of Cert.
HV insulation tester	AR3125	6819355	KS2525021278D001	26/02/2025
HV DC Voltage Meter	HVP-40DM	20240071	AC220250503 08D1	03/03/2025

Remark: P / F / NA = Pass / Fail / Not Applicable,
The passing criteria for the test is passing the insulation test after for maximum voltage withstand test.
The insulation resistance is over 1000MOhm (*) for HV DC Cable and 30MOhm for ESP Cell

Comment:

	Name:	Signature:	Date:
Test / Checked By : REW No.: Grade (Name of CTA Representative)	Ho Tim		21/3/2025
Witnessed By : (Name of JEC Representative)	CHUNG		21/03/2025
Witnessed By : (Name of GCL)	Raymond Lau		21/3/2025
Witnessed By : (Name of AMSV)	Sam Lui		21/3/2025
Witnessed By : (Name of)			
Witnessed By : (Name of)			

Gammon

CTA INTERNATIONAL AS CLEAN TUNNEL AIR

Air Purification System – HV Power Supply Units Test & Commissioning Report			
Contract No.:	HY/2019/13	RISC No.:	32663
Project:	Central Kowloon Route - Buildings, Electrical and Mechanical	Date:	21/03/2025
Location:	YVB / HVB / KVB	Room Name:	Plenum 3
T&C Plan Ref. No:	J3883-TVS-S-06283	Page:	
Ref. Dwg. No.:			

Part 3: Inspection and Test for Electrical Installations (Sheet 2A of 5)

B) Earth Loop Impedance Test (TCP Section 4.5.3)

ESP HV Power Supply Cabinets Information

Cabinets ID:	YVB-APS3-ESP-PSC-01	Main Switch Rating:	80
Location:	ESP HV Switch Room 01 / 02	Supply Fed From:	YVB-DB-ESP03-1

Circuit No	Details of Equipment	Type of Protective Device	Rating	Earth Loop Impedance (Zs) (Ω)	Test Result
1	YVB-APS03-PSU-01 E Subassembly I3	RCBO	16A SP	0.12	P / F / NA
2	YVB-APS03-PSU-02 E Subassembly I2	RCBO	16A SP	0.13	P / F / NA
3	YVB-APS03-PSU-03 E Subassembly I1	RCBO	16A SP	0.18	P / F / NA
4	YVB-APS03-PSU-04 E Subassembly C	RCBO	16A SP	0.14	P / F / NA
5	YVB-APS03-PSU-05 D Subassembly I3	RCBO	16A SP	0.13	P / F / NA
6	YVB-APS03-PSU-06 D Subassembly I2	RCBO	16A SP	0.16	P / F / NA
7	YVB-APS03-PSU-07 D Subassembly I1	RCBO	16A SP	0.16	P / F / NA
8	YVB-APS03-PSU-08 D Subassembly C	RCBO	16A SP	0.18	P / F / NA
9	YVB-APS03-PSU-09 C Subassembly I3	RCBO	16A SP	0.18	P / F / NA
10	YVB-APS03-PSU-10 C Subassembly I2	RCBO	16A SP	0.19	P / F / NA

Remark: P / F / NA = Pass / Fail / Not Applicable
The Passing Criteria for the Max Earth Fault Loop Independence shall refer to EMSD COP.

Comment:

Test / Checked By : REW No.: Grade (Name of CTA Representative)	Name: Ho Tung	Signature:	Date: 21/03/2025
Witnessed By : (Name of JEC Representative)	Name: Cheng TP	Signature:	Date: 21/03/2025
Witnessed By : (Name of GCL)	Name: Raymond Lau	Signature:	Date: 21/03/2025
Witnessed By : (Name of AMSU)	Name: Sam Lui	Signature:	Date: 21/3/2025
Witnessed By : (Name of)	Name:	Signature:	Date:
Witnessed By : (Name of)	Name:	Signature:	Date:

Gammon

CTA INTERNATIONAL AS CLEAN TUNNEL AIR

Air Purification System – HV Power Supply Units Test & Commissioning Report			
Contract No.:	HY/2019/13	RISC No.:	32663
Project:	Central Kowloon Route - Buildings, Electrical and Mechanical	Date:	21/03/2025
Location:	YVB / HVB / KVB	Room Name:	Plenum 3
T&C Plan Ref. No:	J3553-TVS-S-06283	Page:	
Ref. Dwg. No.:			

Part 3: Inspection and Test for Electrical Installations (Sheet 2B of 5)

B) Earth Loop Impedance Test (TCP Section 4.5.3)

ESP HV Power Supply Cabinets Information

Cabinets ID:	YVB-APS3-ESP-PSC-02	Main Switch Rating:	80
Location:	ESP HV Switch Room 01 / 02	Supply Fed From:	YVB-DB-ESP03-2

Circuit No	Details of Equipment	Type of Protective Device	Rating	Earth Loop Impedance (Zs) (Ω)	Test Result
1	YVB-APS03-PSU-4 C Subassembly I1	RCBO	16A SP	0.15	P / F / NA
2	YVB-APS03-PSU-12 C Subassembly C	RCBO	16A SP	0.12	P / F / NA
3	YVB-APS03-PSU-13 B Subassembly I3	RCBO	16A SP	0.14	P / F / NA
4	YVB-APS03-PSU-14 B Subassembly I2	RCBO	16A SP	0.15	P / F / NA
5	YVB-APS03-PSU-15 B Subassembly I1	RCBO	16A SP	0.13	P / F / NA
6	YVB-APS03-PSU-16 B Subassembly C	RCBO	16A SP	0.14	P / F / NA
7	YVB-APS03-PSU-17 A Subassembly I3	RCBO	16A SP	0.15	P / F / NA
8	YVB-APS03-PSU-18 A Subassembly I2	RCBO	16A SP	0.18	P / F / NA
9	YVB-APS03-PSU-19 A Subassembly I1	RCBO	16A SP	0.15	P / F / NA
10	YVB-APS03-PSU-20 A Subassembly C	RCBO	16A SP	0.16	P / F / NA

Remark: P / F / NA = Pass / Fail / Not Applicable
The Passing Criteria for the Max Earth Fault Loop Independence shall refer to EMSD COP.

Comment:

Test / Checked By : REW No.: Grade (Name of CTA Representative)	Name: Ho Tung	Signature:	Date: 21/03/2025
Witnessed By : (Name of JEC Representative)	Name: CHUNG ZP	Signature:	Date: 21/03/2025
Witnessed By : (Name of GCL)	Name: Raymond Lau	Signature:	Date: 21/03/2025
Witnessed By : (Name of AMMSV)	Name: Sam Lai	Signature:	Date: 21/3/2025
Witnessed By : (Name of)	Name:	Signature:	Date:
Witnessed By : (Name of)	Name:	Signature:	Date:

Gammon

CTA INTERNATIONAL AS CLEAN TUNNEL AIR

Air Purification System – HV Power Supply Units Test & Commissioning Report			
Contract No.:	HY/2019/13	RISC No.:	32663
Project:	Central Kowloon Route - Buildings, Electrical and Mechanical	Date:	21/03/2025
Location:	YVB / HVB / KVB	Room Name:	Plenum 3
T&C Plan Ref. No:	T3593-TCS-S-0628 3	Page:	
Ref. Dwg. No.:			

Part 3: Inspection and Test for Electrical Installations (Sheet 3 of 5)

C) Functional Test of Residual Current Device (RCD) (TCP Section 4.5.3)

ESP HV Power Supply Cabinets Information

Cabinets ID:	YVB-APS3-ESP-PSC-01	Main Switch Rating:	80A
Location:	ESP HV Switch Room 01 / 02	Supply Fed From:	YVB-DB-ESP03

Circuit No. or Details of Equipment	Type of Protective Device	Rating	Polarity	RCD 50% (ms)	RCD 100% (ms)	Test Result
1	RCBO	16A SP	P / F / NA	P / F / NA	36.2	P / F / NA
2	RCBO	16A SP	P / F / NA	P / F / NA	27.2	P / F / NA
3	RCBO	16A SP	P / F / NA	P / F / NA	36.7	P / F / NA
4	RCBO	16A SP	P / F / NA	P / F / NA	27.0	P / F / NA
5	RCBO	16A SP	P / F / NA	P / F / NA	36.3	P / F / NA
6	RCBO	16A SP	P / F / NA	P / F / NA	36.2	P / F / NA
7	RCBO	16A SP	P / F / NA	P / F / NA	36.6	P / F / NA
8	RCBO	16A SP	P / F / NA	P / F / NA	27.3	P / F / NA
9	RCBO	16A SP	P / F / NA	P / F / NA	35.8	P / F / NA
10	RCBO	16A SP	P / F / NA	P / F / NA	36.4	P / F / NA

Remark: P / F / NA = Pass / Fail / Not Applicable
Tripping time of RCD for 30mA leakage current shall be within 300ms.

Comment:

Test / Checked By : REW No.: Grade (Name of CTA Representative)	Name: Ho Tung	Signature:	Date: 21/03/2025
Witnessed By : (Name of JEC Representative)	Name: CHUNG TP	Signature:	Date: 21/03/2025
Witnessed By : (Name of GCL)	Name: Raymond Lau	Signature:	Date: 21/03/2025
Witnessed By : (Name of AMNSU)	Name: Sam Lui	Signature:	Date: 21/3/2025
Witnessed By : (Name of)	Name:	Signature:	Date:
Witnessed By : (Name of)	Name:	Signature:	Date:

Gammon

CTA INTERNATIONAL AS CLEAN TUNNEL AIR

Air Purification System – HV Power Supply Units Test & Commissioning Report			
Contract No.:	HY/2019/13	RISC No.:	32663
Project:	Central Kowloon Route - Buildings, Electrical and Mechanical	Date:	21/03/2025
Location:	YVB / HVB / KVB	Room Name:	Plenum 3
T&C Plan Ref. No:	J3383-TVS-S-06283	Page:	
Ref. Dwg. No.:			

Part 3: Inspection and Test for Electrical Installations (Sheet 3 of 5)

C) Functional Test of Residual Current Device (RCD) (TCP Section 4.5.3)

ESP HV Power Supply Cabinets Information

Cabinets ID:	YVB-APS3-ESP-PSC-02	Main Switch Rating:	80A
Location:	ESP HV Switch Room 01 / 02	Supply Fed From:	YVB-DB-ESP03

Circuit No. or Details of Equipment	Type of Protective Device	Rating	Polarity	RCD 50% (ms)	RCD 100% (ms)	Test Result
1	RCBO	16A SP	P / F / NA	P / F / NA	26.6	P / F / NA
2	RCBO	16A SP	P / F / NA	P / F / NA	27.4	P / F / NA
3	RCBO	16A SP	P / F / NA	P / F / NA	27.3	P / F / NA
4	RCBO	16A SP	P / F / NA	P / F / NA	36.8	P / F / NA
5	RCBO	16A SP	P / F / NA	P / F / NA	36.6	P / F / NA
6	RCBO	16A SP	P / F / NA	P / F / NA	27.2	P / F / NA
7	RCBO	16A SP	P / F / NA	P / F / NA	36.9	P / F / NA
8	RCBO	16A SP	P / F / NA	P / F / NA	37.2	P / F / NA
9	RCBO	16A SP	P / F / NA	P / F / NA	27.7	P / F / NA
10	RCBO	16A SP	P / F / NA	P / F / NA	36.7	P / F / NA

Remark: P / F / NA = Pass / Fail / Not Applicable
Tripping time of RCD for 30mA leakage current shall be within 300ms.

Comment:

Test / Checked By : REW No.: Grade (Name of CTA Representative)	Name: Ho Tung	Signature:	Date: 21/03/2025
Witnessed By : (Name of JEC Representative)	Name: CHUNG zp	Signature:	Date: 21/03/2025
Witnessed By : (Name of GCL)	Name: Raymond Lau	Signature:	Date: 21/03/2025
Witnessed By : (Name of AMJV)	Name: Sam Lui	Signature:	Date: 21/3/2025
Witnessed By : (Name of)	Name:	Signature:	Date:
Witnessed By : (Name of)	Name:	Signature:	Date:

Gammon

CTA INTERNATIONAL AS CLEAN TUNNEL AIR

Air Purification System – HV Power Supply Units Test & Commissioning Report			
Contract No.:	HY/2019/13	RISC No.:	32663
Project:	Central Kowloon Route - Buildings, Electrical and Mechanical	Date:	21/03/2025
Location:	YVB / HVB / KVB	Room Name:	Plenum 3
T&C Plan Ref. No:	J3883-TVS-S-06253	Page:	
Ref. Dwg. No.:			

Part 3: Inspection and Test for Electrical Installations (Sheet 4 of 5)

D) Functional Test and Circuitry Check (TCP Section 4.5.3)

ESP HV Power Supply Cabinets Information

Cabinets ID:	YVB-APS3-ESP-PSC-01	Main Switch Rating:	80A
Location:	ESP HV Switch Room 01 / 02	Supply Fed From:	YVB-DB-ESP03

Circuit No. or Details of Equipment	Type of Protective Device	Rating	Isolator	MCB	RCD Test Button	Circuitry Check
1	RCBO	16A SP	P / F / NA	P / F / NA	P / F / NA	P / F / NA
2	RCBO	16A SP	P / F / NA	P / F / NA	P / F / NA	P / F / NA
3	RCBO	16A SP	P / F / NA	P / F / NA	P / F / NA	P / F / NA
4	RCBO	16A SP	P / F / NA	P / F / NA	P / F / NA	P / F / NA
5	RCBO	16A SP	P / F / NA	P / F / NA	P / F / NA	P / F / NA
6	RCBO	16A SP	P / F / NA	P / F / NA	P / F / NA	P / F / NA
7	RCBO	16A SP	P / F / NA	P / F / NA	P / F / NA	P / F / NA
8	RCBO	16A SP	P / F / NA	P / F / NA	P / F / NA	P / F / NA
9	RCBO	16A SP	P / F / NA	P / F / NA	P / F / NA	P / F / NA
10	RCBO	16A SP	P / F / NA	P / F / NA	P / F / NA	P / F / NA
Air Conditioner	~~MCB~~ RCBO	16A SP	P / F / NA	P / F / NA	P / F / NA	P / F / NA

Remark: P / F / NA = Pass / Fail / Not Applicable

Comment:

Test / Checked By : REW No.: Grade (Name of CTA Representative)	Name: Ho Tim	Signature:	Date: 21/03/2025
Witnessed By : (Name of JEC Representative)	Name: CHUNG IP	Signature:	Date: 21/03/2025
Witnessed By : (Name of GCL)	Name: Raymond Lau	Signature:	Date: 21/03/2025
Witnessed By : (Name of AMMSU)	Name: Sam Lui	Signature:	Date: 21/3/2025
Witnessed By : (Name of)	Name:	Signature:	Date:
Witnessed By : (Name of)	Name:	Signature:	Date:

Gammon

CTA INTERNATIONAL AS

Air Purification System – HV Power Supply Units Test & Commissioning Report			
Contract No.:	HY/2019/13	RISC No.:	32663
Project:	Central Kowloon Route - Buildings, Electrical and Mechanical	Date:	21/03/2025
Location:	YVB / HVB / KVB	Room Name:	Plenum 3
T&C Plan Ref. No:	T3853-TVS-S-06283	Page:	
Ref. Dwg. No.:			

Part 3: Inspection and Test for Electrical Installations (Sheet 4 of 5)

D) Functional Test and Circuitry Check (TCP Section 4.5.3)

ESP HV Power Supply Cabinets Information

Cabinets ID:	YVB-APS3-ESP-PSC-02	Main Switch Rating:	80A
Location:	ESP HV Switch Room 01 / 02	Supply Fed From:	YVB-DB-ESP03

Circuit No. or Details of Equipment	Type of Protective Device	Rating	Isolator	MCB	RCD Test Button	Circuitry Check
1	RCBO	16A SP	P / F / NA	P / F / NA	P / F / NA	P / F / NA
2	RCBO	16A SP	P / F / NA	P / F / NA	P / F / NA	P / F / NA
3	RCBO	16A SP	P / F / NA	P / F / NA	P / F / NA	P / F / NA
4	RCBO	16A SP	P / F / NA	P / F / NA	P / F / NA	P / F / NA
5	RCBO	16A SP	P / F / NA	P / F / NA	P / F / NA	P / F / NA
6	RCBO	16A SP	P / F / NA	P / F / NA	P / F / NA	P / F / NA
7	RCBO	16A SP	P / F / NA	P / F / NA	P / F / NA	P / F / NA
8	RCBO	16A SP	P / F / NA	P / F / NA	P / F / NA	P / F / NA
9	RCBO	16A SP	P / F / NA	P / F / NA	P / F / NA	P / F / NA
10	RCBO	16A SP	P / F / NA	P / F / NA	P / F / NA	P / F / NA
Air conditioner	~~MCB~~ RCBO	16A SP	P / F / NA	P / F / NA	P / F / NA	P / F / NA

Remark: P / F / NA = Pass / Fail / Not Applicable

Comment:

Test / Checked By : REW No.: Grade (Name of CTA Representative)	Name: Ho Tung	Signature:	Date: 21/03/2025
Witnessed By : (Name of JEC Representative)	Name: CHUNG	Signature:	Date: 21/03/2025
Witnessed By : (Name of GCL)	Name: Raymond Lau	Signature:	Date: 21/03/2025
Witnessed By : (Name of AMNSU)	Name: Sam Lui	Signature:	Date: 21/3/2025
Witnessed By : (Name of)	Name:	Signature:	Date:
Witnessed By : (Name of)	Name:	Signature:	Date:

Gammon

CTA INTERNATIONAL AS CLEAN TUNNEL AIR

Air Purification System – HV Power Supply Units Test & Commissioning Report			
Contract No.:	HY/2019/13	RISC No.:	032046
Project:	Central Kowloon Route - Buildings, Electrical and Mechanical	Date:	25/03/2025
Location:	YVB / HVB / KVB	Room Name:	Plenum 3
T&C Plan Ref. No:	J3883-TLS-S-06283	Page:	
Ref. Dwg. No.:			

Part 2: Installation Inspection and Cable Tests for HV DC Cables (Sheet 1 of 2)

A) Visual Inspection (TCP Section 4.4.1)

Items	Description of Inspection	Test Result
a)	No visible damage to impair safety	P / F / NA
b)	Ensure all cables, HV connectors, cable glands & accessories are in good condition	P / F / NA
c)	All conductors are correctly and securely connected and identified, protected against mechanical damage, and adequately supported	P / F / NA

B) HV DC Cable Continuity Tests (TCP Section 4.4.2)

From: ESP HV Switch Room 01 / 02 To: APS Plenum No.01 / 02 / 03 Sub-assembly A / B / C / D / E

Items	Circuit No. or Details of Equipment	Cable Length	Continuity Resistance (Ω) Measured	Calculated	Passing Criteria	Test Result
1	YVB-APS3-HVC-3 Ionizer 3	25.4m	0.45	0.23	0.62	P / F / NA
2	YVB-APS3-HVC-2 Ionizer 2	24.9m		0.22	0.61	P / F / NA
3	YVB-APS3-HVC-1 Ionizer 1	24.6m	0.39	0.20	0.60	P / F / NA
4	YVB-APS3-HVC-4 Collector	24.0m		0.19	0.59	P / F / NA

C) List of Testing Equipment / Instruments

Type	Model	Serial No	Calibration Cert. No	Date of Cert.
Digital Micro Ohmmeter	UT620C+	C242921984	ACZ202502220127	22/02/2025
Cable fault test	LCT268-2(KM)	250219005	ACZ202503030802	22/02/2025

Remark: P / F / NA = Pass / Fail / Not Applicable
Insulation Resistance should be >1000MΩ, Continuity Resistance shall be < 0.0245Ω/m **(B)**

Comment:

Test / Checked By : REW No.: Grade (Name of CTA Representative)	Name: Ho Tung	Signature:	Date: 25/03/2025
Witnessed By : (Name of JEC Representative)	Name: CHUNG ZP	Signature:	Date: 25/03/2025
Witnessed By : (Name of GCL)	Name: Raymond Lau	Signature:	Date: 25/03/2025
Witnessed By : (Name of AMNSV)	Name: Sam Lui	Signature:	Date: 25/03/2025
Witnessed By : (Name of)	Name:	Signature:	Date:
Witnessed By : (Name of)	Name:	Signature:	Date:

Gammon

CTA INTERNATIONAL AS

Air Purification System – HV Power Supply Units Test & Commissioning Report			
Contract No.:	HY/2019/13	RISC No.:	32663A
Project:	Central Kowloon Route - Buildings, Electrical and Mechanical	Date:	9/10/2025
Location:	YVB / HVB / KVB	Room Name:	HV Switch Rm 1
T&C Plan Ref. No:		Page:	
Ref. Dwg. No.:			

Part 3: Inspection and Test for Electrical Installations (Sheet 1 of 5)

A) Continuity Test of ESP DC Earthing Conductor and 0V conductor (TCP Section 4.5.3)

Location: ESP HV Switch Room 01 / 02

Circuit No. or Details of Equipment	Continuity of Conductor (ohm)	Test Result
APS 3 - PSC01		
1L1	0.03	P / F / NA
2L1	0.02	P / F / NA
3L1	0.01	P / F / NA
4L1	0.02	P / F / NA
(Ho Tung) 1L2	0.02	P / F / NA
2L2	0.03	P / F / NA
3L2	0.04	P / F / NA
4L2	0.02	P / F / NA
1L3	0.01	P / F / NA
2L3	0.02	P / F / NA
		P / F / NA

Remark: P / F / NA = Pass / Fail / Not Applicable
The Passing Criteria for Reading of Continuity test should be <1Ω

Comment:

Test / Checked By : REW No.: W133567 Grade B+H (Name of CTA Representative)	Name: Ho Tung	Signature: Ho Tung	Date: 9/10/25
Witnessed By : (Name of JEC Representative)	Name: Chung Tp	Signature:	Date: 9/10/25
Witnessed By : (Name of GCL)	Name: Gang Tsp	Signature: Gang Tsp	Date: 9/10/25
Witnessed By : (Name of AMMTV)	Name: Andy Tang	Signature: me Tang	Date: 9/10/25
Witnessed By : (Name of)	Name:	Signature:	Date:
Witnessed By : (Name of)	Name:	Signature:	Date:

Gammon

CTA INTERNATIONAL AS

Air Purification System – HV Power Supply Units Test & Commissioning Report			
Contract No.:	HY/2019/13	RISC No.:	32663A
Project:	Central Kowloon Route - Buildings, Electrical and Mechanical	Date:	9/10/25
Location:	YVB / HVB / KVB	Room Name:	HV Switch Room 1
T&C Plan Ref. No:		Page:	
Ref. Dwg. No.:			

Part 3: Inspection and Test for Electrical Installations (Sheet 1 of 5)

A) Continuity Test of ESP DC Earthing Conductor and 0V conductor (TCP Section 4.5.3)

Location: ESP HV Switch Room 01 / 02

	Circuit No. or Details of Equipment	Continuity of Conductor (ohm)	Test Result
	APS3-PSC02		
1	1L1	0.03	P / F / NA
2	2L1	0.01	P / F / NA
3	3L1	0.02	P / F / NA
4	4L1	0.02	P / F / NA
5	Ch Tyg 1L2	0.03	P / F / NA
6	2L2	0.01	P / F / NA
7	3L2	0.02	P / F / NA
8	4L2	0.03	P / F / NA
9	1L3	0.02	P / F / NA
10	2L3	0.02	P / F / NA
			P / F / NA

Remark: P / F / NA = Pass / Fail / Not Applicable
The Passing Criteria for Reading of Continuity test should be <1Ω

Comment:

	Name:	Signature:	Date:
Test / Checked By : REW No.: W133567 Grade B+M (Name of CTA Representative)	Ho Tung	Ho Tung	9/10/25
Witnessed By : (Name of JEC Representative)	Chung Zp	G	9/10/25
Witnessed By : (Name of GCL)	Gang Zp	Gang Zp	9/10/25
Witnessed By : (Name of AMMJV)	Andy Tang	Andy Tang	9/10/25
Witnessed By : (Name of)			
Witnessed By : (Name of)			

Gammon

CTA INTERNATIONAL AS

Air Purification System – HV Power Supply Units Test & Commissioning Report			
Contract No.:	HY/2019/13	RISC No.:	32663A
Project:	Central Kowloon Route - Buildings, Electrical and Mechanical	Date:	9/10/2025
Location:	YVB / HVB / KVB	Room Name:	HV Switch Rm 1
T&C Plan Ref. No:		Page:	
Ref. Dwg. No.:			

Part 3: Inspection and Test for Electrical Installations (Sheet 1 of 5)

A) Continuity Test of ESP DC Earthing Conductor and 0V conductor (TCP Section 4.5.3)

Location: ESP HV Switch Room 01 / 02 (Ho Tung)

Circuit No. or Details of Equipment	Continuity of Conductor (ohm)	Test Result
CABLE TRAY AT APS1	0.05	P / F / NA
PSU CABINET 1	0.04	P / F / NA
		P / F / NA
CABLE TRAY AT APS3	0.07	P / F / NA
PSU CABINET 3	0.05	P / F / NA
		P / F / NA
		P / F / NA
		P / F / NA
		P / F / NA
		P / F / NA
		P / F / NA

Remark: P / F / NA = Pass / Fail / Not Applicable
The Passing Criteria for Reading of Continuity test should be <1Ω

Comment:

Test / Checked By : REW No.: W133567 Grade B+H (Name of CTA Representative)	Name: Ho Tung	Signature: Ho Tung	Date: 9/10/25
Witnessed By : (Name of JEC Representative)	Name: Chung Ip	Signature: C	Date: 9/10/25
Witnessed By : (Name of Gel)	Name: Gang Exp	Signature: Gang Exp.	Date: 9/10/25
Witnessed By : (Name of AMMJV)	Name: Andy Tang	Signature: Andy Tang	Date: 9/10/25
Witnessed By : (Name of)	Name:	Signature:	Date:
Witnessed By : (Name of)	Name:	Signature:	Date:

Gammon

CTA INTERNATIONAL AS CLEAN TUNNEL AIR

Air Purification System – HV Power Supply Units Test & Commissioning Report			
Contract No.:	HY/2019/13	RISC No.:	32663A
Project:	Central Kowloon Route - Buildings, Electrical and Mechanical	Date:	9/10/2025
Location:	YVB / HVB / KVB	Room Name:	ESP HV Switch Rm 1
T&C Plan Ref. No:		Page:	
Ref. Dwg. No.:			

Part 3: Inspection and Test for Electrical Installations (Sheet 5 of 5)

E) Bonding Continuity Test

Equipment Description	Equipotential Bonding (Ω)	Supplementary Bonding (Ω)	Test Result
OV AT APS 1	0.12		P / F / NA
ESP DC EARTH AT	0.12		P / F / NA
APS 1			P / F / NA
			P / F / NA
OV AT APS 3	0.12		P / F / NA
ESP DC EARTH AT	0.12		P / F / NA
APS 3			P / F / NA
			P / F / NA
Ho Tung FENCING WALL		0.05	P / F / NA
AT ESP APS HV			P / F / NA
ROOM 1			P / F / NA
			P / F / NA
			P / F / NA
			P / F / NA
			P / F / NA

Remark: P / F / NA = Pass / Fail / Not Applicable
The Passing Criteria of the Reading of Continuity test should be <1Ω.

Comment:

	Name:	Signature:	Date:
Test / Checked By : REW No.: W133567 Grade B+H (Name of CTA Representative)	Ho Tung	Ho Tung	9/10/25
Witnessed By : (Name of JEC Representative)	Chung Kp		9/10/25
Witnessed By : (Name of GEL)	Gong Kp	Gong Kp	9/10/25
Witnessed By : (Name of AMMJV)	Andy Tang	Andy Tang	9/10/25
Witnessed By : (Name of)			
Witnessed By : (Name of)			

Gammon

CIA INTERNATIONAL AS

Air Purification System – HV Power Supply Units Test & Commissioning Report			
Contract No.:	HY/2019/13	RISC No.:	32048
Project:	Central Kowloon Route - Buildings, Electrical and Mechanical	Date:	21/03/2025
Location:	YVB / ~~HVB / KVB~~	Room Name:	HV Room 1
T&C Plan Ref. No:	J3883-TVS-S-06283	Page:	
Ref. Dwg. No.:			

Part 3: Inspection and Test for Electrical Installation of ESP Filter (TCP Section 4.5)

Statutory Inspection and Test for LV and HV DC Installation (Sheet 1 of 10)

Items	Description of Inspection	Test Result
A) Visual Inspection (ASD TCP-EE, COP Code 21A/C and COP Appendix 13) - Working Space and Facilities (L.V.)		
a.	Adequacy working space and safe access provided for switch room / electrical facilities.	P / F / NA
b.	Entrance / exit to switch room and/or electrical facilities are free of obstruction.	P / F / NA
c.	Suitable locking facilities provided for switch room and /or electrical facilities.	P / F / NA
d.	Suitable lighting provision provided for switch room and /or electrical facilities.	P / F / NA
e.	Suitable ventilation provision provided for switch room and /or electrical facilities.	P / F / NA
f.	A warning notice 'DANGER — ELECTRICITY, UNAUTHORISED ENTRY PROHIBITED' and '危 險 —— 有電，未經授權不得內進' provided at every entrance of switch room.	P / F / NA
g.	Danger notices, warning notices, schematic diagrams, instructions and similar information are correctly and adequately provided.	P / F / NA
h.	Warning notices for Switch Rooms provided in compliance with EMSD CoP Code 17.	P / F / NA
i.	Warning notices for earthing and main bonding connections provided in compliance with EMSD CoP Code 17.	P / F / NA
j.	All switchgears, distribution boards and electrical equipment properly labelled in compliance with EMSD CoP Code 4D(1).	P / F / NA
k.	Continuity of protective conductors especially the bonding of all exposed conductive parts are satisfactory.	P / F / NA
l.	Logbook provided and work done properly recorded.	P / F / NA
Remark:	P / F / NA = Pass / Fail / Not Applicable	
Comment:		

Test / Checked By : REW No.: Grade (Name of CTA Representative)	Name: Ho Tung	Signature: Ho Tung	Date: 21/03/2025
Witnessed By : (Name of JEC Representative)	Name: CHUNG	Signature:	Date: 21/03/2025
Witnessed By : (Name of GCL)	Name: Raymond Lau	Signature:	Date: 21/03/2025
Witnessed By : AMMJV (Name of)	Name: Eric Tang	Signature:	Date: 21/03/2025
Witnessed By : (Name of)	Name:	Signature:	Date:
Witnessed By : (Name of)	Name:	Signature:	Date:

Gammon

CTA INTERNATIONAL AS

Air Purification System – HV Power Supply Units Test & Commissioning Report			
Contract No.:	HY/2019/13	RISC No.:	32048
Project:	Central Kowloon Route - Buildings, Electrical and Mechanical	Date:	21/03/2025
Location:	YVB / ~~HVB / KVB~~	Room Name:	HV Room 1
T&C Plan Ref. No:	J3883-TVS-S-06283	Page:	
Ref. Dwg. No.:			

Part 3: Inspection and Test for Electrical Installation of ESP Filter (TCP Section 4.5)

Statutory Inspection and Test for LV and HV DC Installation (Sheet 2 of 10)

Items	Description of Inspection	Test Result
B)	**Visual Inspection (ASD TCP-EE, COP Code 21A & C and COP Appendix 13) - Distribution Board (L.V.)**	
a.	No visible damage to impair safety	P / F / NA
b.	No fuse installed in the neutral circuit.	P / F / NA
c.	All live parts screened with an insulating plate or earthed metal	P / F / NA
d.	All exposed metal parts effectively earthed.	P / F / NA
e.	A warning notice 'DANGER' and '危險' provided on the front panel of every distribution board.	P / F / NA
f.	A notice of periodic testing provided at or near the main distribution board incorporating a residual current device.	P / F / NA
g.	Safe access & adequate clearance space provided in compliance with EMSD CoP Code 4E.	P / F / NA
h.	Distribution boards securely mounted on suitable supports.	P / F / NA
i.	A suitable switch provided to control each distribution board.	P / F / NA
j.	Phase Identification for distribution board provided.	P / F / NA
k.	Check the breaking capacity of MCB / RCBO (6kA) in compliance with EMSD CoP Code 9.	P / F / NA
l.	Circuits connected to MCB / RCBO in accordance with the schematic diagram.	P / F / NA

Remark: P / F / NA = Pass / Fail / Not Applicable

Comment:

Test / Checked By : REW No.: Grade (Name of CTA Representative)	Name: Ho Tung	Signature: Ho Tung	Date: 21/03/2025
Witnessed By : (Name of JEC Representative)	Name: CHUNG	Signature:	Date: 21/03/2025
Witnessed By : (Name of GCL)	Name: Raymond Lau	Signature:	Date: 21/03/2025
Witnessed By : AMMJV (Name of)	Name: Eric Tang	Signature:	Date: 21/3/25
Witnessed By : (Name of)	Name:	Signature:	Date:
Witnessed By : (Name of)	Name:	Signature:	Date:

Gammon

CTA INTERNATIONAL AS CLEAN TUNNEL AIR

Air Purification System – HV Power Supply Units Test & Commissioning Report			
Contract No.:	HY/2019/13	RISC No.:	32048
Project:	Central Kowloon Route - Buildings, Electrical and Mechanical	Date:	21/03/2025
Location:	YVB / ~~HVB / KVB~~	Room Name:	HV Room 1
T&C Plan Ref. No:	J3883-TVS-S-06283	Page:	
Ref. Dwg. No.:			

Part 3: Inspection and Test for Electrical Installation of ESP Filter (TCP Section 4.5)

Statutory Inspection and Test for LV and HV DC Installation (Sheet 3 of 10)

Items	Description of Inspection	Test Result
C) Visual Inspection (ASD TCP-EE, COP Code 21A & C and COP Appendix 13) - Conductors, Cables and Wirings (L.V.)		
a.	No visible damage to impair safety.	P / F / NA
b.	All live conductors and their methods of insulation, in relation to design currents of circuits and to the operating currents of the protective devices, are properly selected and erected.	P / F / NA
c.	All cables, flexible cords, switches, plugs and socket outlets, accessories and equipment are found to be in good working conditions.	P / F / NA
d.	All conductors are correctly and securely connected and identified.	P / F / NA
e.	Armoured cables properly terminated by proper cable glands.	P / F / NA
f.	Non-sheathed cables protected by conduit, trunking, ducting or approved mechanical protective means.	P / F / NA
g.	Cables and cable containments, such as tray, ladder, ducting, trunking, conduit, etc., adequately supported.	P / F / NA
h.	Suitable cable lugs used for terminating cables, including termination at distribution board.	P / F / NA
i.	Main cables connected up with correct polarity.	P / F / NA
j.	Cables protected against mechanical damage and suitably supported.	P / F / NA
k.	All exposed metal parts including the armour effectively earthed.	P / F / NA
Remark: P / F / NA = Pass / Fail / Not Applicable		
Comment:		

Test / Checked By : REW No.: Grade (Name of CTA Representative)	Name: Ho Tung	Signature: Ho Tung	Date: 21/03/2025
Witnessed By : (Name of JEC Representative)	Name: CHUNG	Signature:	Date: 21/03/2025
Witnessed By : (Name of GCL)	Name: Raymond Lau	Signature:	Date: 21/03/2025
Witnessed By : AMMJV (Name of)	Name: Eric Tang	Signature:	Date: 21/03/25
Witnessed By : (Name of)	Name:	Signature:	Date:
Witnessed By : (Name of)	Name:	Signature:	Date:

Gammon

CTA INTERNATIONAL AS CLEAN TUNNEL AIR

Air Purification System – HV Power Supply Units Test & Commissioning Report			
Contract No.:	HY/2019/13	RISC No.:	32048
Project:	Central Kowloon Route - Buildings, Electrical and Mechanical	Date:	21/03/2025
Location:	YVB ~~/ HVB / KVB~~	Room Name:	HV Room 1
T&C Plan Ref. No:	J3883-TVS-S-06283	Page:	
Ref. Dwg. No.:			

Part 3: Inspection and Test for Electrical Installation of ESP Filter (TCP Section 4.5)

Statutory Inspection and Test for LV and HV DC Installation (Sheet 4 of 10)

Items	Description of Inspection	Test Result
D)	**Visual Inspection (ASD TCP-EE, COP Code 21A and COP Appendix 13) - Final Circuits (L.V.)**	
a.	No visible damage to impair safety	P / F / NA
b.	All non-armoured cables susceptible to damage protected with steel conduit / trunking Bushing and rubber gromment, where necessary, provided.	P / F / NA
c.	Conductor sized to suit the rating of the fuse/ MCB protecting the circuit.	P / F / NA
d.	No cable joint in final circuit.	P / F / NA
e.	All joints of metal conduits or trunking to be mechanically sound, electrically continuous and protected against corrosion.	P / F / NA
f.	All metal conduits, trunking, switch boxes and exposed metal parts effectively earth.	P / F / NA
g.	Earth fault loop impedance and polarities of every outlet checked.	P / F / NA
h.	All fuses and single/double pole switches connected to the phase conductors only with correct polarity.	P / F / NA
i.	Low voltage circuits segregated from extra low voltage circuits.	P / F / NA
j.	Exposed insulated non-sheathed cables with mechanically protected.	P / F / NA
k.	No 2-pin sockets installed. All socket outlets connected with protective conductors and live conductors terminated at correct terminals.	P / F / NA

Remark: P / F / NA = Pass / Fail / Not Applicable

Comment:

Test / Checked By : REW No.: Grade (Name of CTA Representative)	Name: Ho Tung	Signature: Ho Tung	Date: 21/03/2025
Witnessed By : (Name of JEC Representative)	Name: CHUNG	Signature:	Date: 21/03/2025
Witnessed By : (Name of GCL)	Name: Raymond Lau	Signature:	Date: 21/03/2025
Witnessed By : AMMJV (Name of)	Name: Eric Tang	Signature:	Date: 21/03/25
Witnessed By : (Name of)	Name:	Signature:	Date:
Witnessed By : (Name of)	Name:	Signature:	Date:

Gammon

CTA INTERNATIONAL AS CLEAN TUNNEL AIR

Air Purification System – HV Power Supply Units Test & Commissioning Report			
Contract No.:	HY/2019/13	RISC No.:	32048
Project:	Central Kowloon Route - Buildings, Electrical and Mechanical	Date:	21/03/2025
Location:	YVB ~~/ HVB / KVB~~	Room Name:	HV Room 1
T&C Plan Ref. No:	J3883-TVS-S-06283	Page:	
Ref. Dwg. No.:			

Part 3: Inspection and Test for Electrical Installation of ESP Filter (TCP Section 4.5)

Statutory Inspection and Test for LV and HV DC Installation (Sheet 5 of 10)

Items	Description of Inspection	Test Result
E) Visual Inspection (ASD TCP-EE, COP Code 21A and COP Appendix 13) - Final Circuits (L.V.)		
l.	Final circuits using 13A socket outlets in compliance with EMSD Code 6E.	P / F / NA
m.	Where circuit protective conductor is formed by the metallic cable containment enclosure, a separate protective conductor between the earthing terminal of socket outlet and its associated metal box being provided.	P / F / NA
n.	Where circuit protective conductor is not formed by the metallic cable containment enclosure, a separate protective conductor to the earthing terminal of socket outlet being provided.	P / F / NA
o.	Residual current device having a rated residual operating current not exceeding 30mA provided for all socket outlets.	P / F / NA
p.	Minimum sizes of protective conductors are provided as per requirement in EMSD COP Code 11 for limitation of protective conductor impedance.	P / F / NA
q.	Means of isolation provided for every fixed appliance.	P / F / NA

Remark: P / F / NA = Pass / Fail / Not Applicable

Comment:

Test / Checked By : REW No.: Grade (Name of CTA Representative)	Name: Ho Tung	Signature: Ho Tung	Date: 21/03/2025
Witnessed By : (Name of JEC Representative)	Name: CHUNG	Signature:	Date: 21/03/2025
Witnessed By : (Name of GCL)	Name: Raymond Lau	Signature:	Date: 21/03/2025
Witnessed By : AMTOV (Name of)	Name: Eric Tang	Signature:	Date: 21/03/25
Witnessed By : (Name of)	Name:	Signature:	Date:
Witnessed By : (Name of)	Name:	Signature:	Date:

Gammon

CIA INTERNATIONAL AS CLEAR TUNNEL AIR

Air Purification System – HV Power Supply Units Test & Commissioning Report			
Contract No.:	HY/2019/13	RISC No.:	32048
Project:	Central Kowloon Route - Buildings, Electrical and Mechanical	Date:	21/03/2025
Location:	YVB / ~~HVB / KVB~~	Room Name:	HV Room 1
T&C Plan Ref. No:	J3883-TVS-S-06283	Page:	
Ref. Dwg. No.:			

Part 3: Inspection and Test for Electrical Installation of ESP Filter (TCP Section 4.5)

Statutory Inspection and Test for LV and HV DC Installation (Sheet 6 of 10)

Items	Description of Inspection	Test Result
F)	**Visual Inspection (ASD TCP-EE, COP Code 21A&C and COP Appendix 13) - Earthing and Bonding (L.V.)**	
a.	No visible damage to impair safety.	P / F / NA
b.	All exposed conductive parts of the wiring installation connected to the earthing terminal with appropriate protective conductor.	P / F / NA
c.	Minimum size of protective conductor used in compliance with EMSD CoP Table 11(1).	P / F / NA
d.	Protective conductor up to and including 6mm2 with green and yellow insulation sheath used throughout its length.	P / F / NA
e.	Copper links provided at joints of metallic trunking, forms part of a protective conductor	P / F / NA
f.	A warning notice 'SAFETY ELECTRICAL CONNECTION—DO NOT REMOVE and '安全接地 終端——切勿移去' provided at all main earthing and bonding connections.	P / F / NA
g.	Supplementary equipotential bonding effectively provided between exposed conductive parts and extraneous conductive parts.	P / F / NA
h.	Exposed conductive parts of fixed equipment installed outside equipotential zone effectively earthed for 0.4 sec. disconnection.	P / F / NA
i.	Exposed conductive parts of fixed equipment installed within equipotential zone effectively earthed for 5 sec. disconnection.	P / F / NA
j.	Effectiveness of the main equipotential bonding connection to the main earthing terminal.	P / F / NA
k.	Earthing conductors of adequate size.	P / F / NA
Remark:	P / F / NA = Pass / Fail / Not Applicable	
Comment:		

Test / Checked By : REW No.: Grade (Name of CTA Representative)	Name: Ho Tung	Signature: Ho Tung	Date: 21/03/2025
Witnessed By : (Name of JEC Representative)	Name: CHUNG	Signature:	Date: 21/03/2025
Witnessed By : (Name of GCL)	Name: Raymond Lau	Signature:	Date: 21/03/2025
Witnessed By : AMMJV (Name of)	Name: Eric Tang	Signature:	Date: 21/03/25
Witnessed By : (Name of)	Name:	Signature:	Date:
Witnessed By : (Name of)	Name:	Signature:	Date:

Gammon

CTA INTERNATIONAL AS CLEAN TUNNEL AIR

Air Purification System – HV Power Supply Units Test & Commissioning Report			
Contract No.:	HY/2019/13	RISC No.:	32048
Project:	Central Kowloon Route - Buildings, Electrical and Mechanical	Date:	21/03/2025
Location:	YVB ~~/ HVB / KVB~~	Room Name:	HV Room 1
T&C Plan Ref. No:	J3883-TVS-S-06283	Page:	
Ref. Dwg. No.:			

Part 3: Inspection and Test for Electrical Installation of ESP Filter (TCP Section 4.5)

Statutory Inspection and Test for LV and HV DC Installation (Sheet 7 of 10)

Items	Description of Inspection	Test Result
G) Conductor Continuity (ASD TCP-EE, COP Code 21B(3) and (4))		
a.	All protective conductors used for equipotential bonding have been tested for continuity.	P / F / NA
b.	All final ring circuit conductors including the protective conductors have been tested for continuity.	P / F / NA
c.	Conductor continuity test results recorded in **relevant Test Form.**	P / F / NA

Remark: P / F / NA = Pass / Fail / Not Applicable

Comment:

Test / Checked By : REW No.: Grade (Name of CTA Representative)	Name: Ho Tung	Signature: Ho Tung	Date: 21/03/2025
Witnessed By : (Name of JEC Representative)	Name: CHUNG TP	Signature:	Date: 21/03/2025
Witnessed By : (Name of GCL)	Name: Raymond Lau	Signature:	Date: 21/03/2025
Witnessed By : AMMGV (Name of)	Name: Eric Tang	Signature:	Date: 21/03/25
Witnessed By : (Name of)	Name:	Signature:	Date:
Witnessed By : (Name of)	Name:	Signature:	Date:

Gammon

CTA INTERNATIONAL AS CLEAN TUNNEL AIR

Air Purification System – HV Power Supply Units Test & Commissioning Report			
Contract No.:	HY/2019/13	RISC No.:	32048
Project:	Central Kowloon Route - Buildings, Electrical and Mechanical	Date:	21/03/2025
Location:	YVB / ~~HVB / KVB~~	Room Name:	HV Room 1
T&C Plan Ref. No:	J3883-TVS-S-06283	Page:	
Ref. Dwg. No.:			

Part 3: Inspection and Test for Electrical Installation of ESP Filter (TCP Section 4.5)

Statutory Inspection and Test for LV and HV DC Installation (Sheet 8 of 10)

Items	Description of Inspection	Test Result
H)	**Insulation Resistance (ASD TCP-EE, COP Code 21B(5))**	
a.	The insulation resistance to earth is NOT less than 1 mega ohm.	P / F / NA
b.	The insulation resistance between phase/poles is NOT less than 1 mega ohm.	P / F / NA
c.	The insulation resistance of equipment between the exposed conductive parts and all live parts is NOT less than 1 mega ohm when tested individually and separately (EMSD COP Code 21B(5)(f)).	P / F / NA
d.	Insulation resistance test results recorded in **relevant Test Form.**	P / F / NA

Remark: P / F / NA = Pass / Fail / Not Applicable

Comment:

Test / Checked By : REW No.: Grade (Name of CTA Representative)	Name: Ho Tung	Signature: Ho Tung	Date: 21/03/2025
Witnessed By : (Name of JEC Representative)	Name: CHEUNG ZP	Signature:	Date: 21/03/2025
Witnessed By : (Name of GCL)	Name: Raymond Lau	Signature:	Date: 21/03/2025
Witnessed By : AMMJV (Name of)	Name: Eric Tong	Signature:	Date: 21/03/25
Witnessed By : (Name of)	Name:	Signature:	Date:
Witnessed By : (Name of)	Name:	Signature:	Date:

Gammon

CTA INTERNATIONAL AS OCEAN TUNNEL AIR

Air Purification System – HV Power Supply Units Test & Commissioning Report			
Contract No.:	HY/2019/13	RISC No.:	32048
Project:	Central Kowloon Route - Buildings, Electrical and Mechanical	Date:	21/03/2025
Location:	YVB ~~/ HVB / KVB~~	Room Name:	HV Room 1
T&C Plan Ref. No:	J3883-TVS-S-06283	Page:	
Ref. Dwg. No.:			

Part 3: Inspection and Test for Electrical Installation of ESP Filter (TCP Section 4.5)

Statutory Inspection and Test for LV and HV DC Installation (Sheet 9 of 10)

Items	Description of Inspection	Test Result
I) Polarity (ASD TCP-EE, COP Code 21B(6))		
a.	All fuses and single-poles devices are connected in the phase conductors only.	P / F / NA
b.	All wiring has been correctly connected to socket outlets and, etc.	P / F / NA
c.	Polarity Check results recorded in **relevant Test Form.**	P / F / NA

Remark: P / F / NA = Pass / Fail / Not Applicable

Comment:

Test / Checked By : REW No.: Grade (Name of CTA Representative)	Name: Ho Tung	Signature: Ho Tung	Date: 21/03/2025
Witnessed By : (Name of JEC Representative)	Name: CHUNG YP	Signature:	Date: 21/03/2025
Witnessed By : (Name of GCL)	Name: Raymond Lau	Signature:	Date: 21/03/2025
Witnessed By : AMMJV (Name of)	Name: Eric Tang	Signature:	Date: 21/03/25
Witnessed By : (Name of)	Name:	Signature:	Date:
Witnessed By : (Name of)	Name:	Signature:	Date:

Gammon

CTA INTERNATIONAL AS CLEAN TUNNEL AIR

Air Purification System – HV Power Supply Units Test & Commissioning Report			
Contract No.:	HY/2019/13	RISC No.:	32048
Project:	Central Kowloon Route - Buildings, Electrical and Mechanical	Date:	21/03/2025
Location:	YVB / ~~HVB / KVB~~	Room Name:	HV Room 1
T&C Plan Ref. No:	J3883-TVS-S-06283	Page:	
Ref. Dwg. No.:			

Part 3: Inspection and Test for Electrical Installation of ESP Filter (TCP Section 4.5)

Statutory Inspection and Test for LV and HV DC Installation (Sheet 10 of 10)

Items	Description of Inspection	Test Result
J) Functional Testing of All Devices Including Protective Devices (ASD TCP-EE, COP Code 21B(9))		
a.	Simulation tests on the operation of devices for earth fault protection are satisfactory.	P / F / NA
b.	50% of the rated tripping current shall not cause the residual current circuit breaker to open.	P / F / NA
c.	100% of the rated tripping current shall cause the residual current circuit breaker to open within 300ms or at any delay time declared by the manufacture of the devices.	P / F / NA
d.	Where the residual current circuit breaker has a rated tripping current not exceeding 30mA and has been installed to reduce the risk associated with direct contact, a residual current of 150mA should cause the circuit breaker to open within 40ms.	P / F / NA
e.	In no event should the test current be applied for a period exceeding one second	P / F / NA
f.	Breakers, moulded case circuit breakers, air circuit breakers, fused switches, switch-fuses and protective relays, etc. are satisfactory.	P / F / NA
g.	Hand operation on all items of equipment such as isolators, switch and protective relays, etc. are satisfactory.	P / F / NA
h.	Hand operation on all items of equipment such as isolators, switches and indicative devices are satisfactory.	P / F / NA
i.	Functional test of all devices including protective devices had been recorded in **relevant Test Form.**	P / F / NA
Remark: P / F / NA = Pass / Fail / Not Applicable		
Comment:		

Test / Checked By : REW No.: Grade (Name of CTA Representative)	Name: Ho Tung	Signature: Ho Tung	Date: 21/03/2025
Witnessed By : (Name of JEC Representative)	Name: CHUNG IP	Signature:	Date: 21/03/2025
Witnessed By : (Name of GCL)	Name: Raymond Lau	Signature:	Date: 21/03/2025
Witnessed By : AMMGV (Name of)	Name: Eric Tang	Signature:	Date: 21/03/25
Witnessed By : (Name of)	Name:	Signature:	Date:
Witnessed By : (Name of)	Name:	Signature:	Date:

Gammon

CTA INTERNATIONAL AS

Air Purification System – HV Power Supply Units Test & Commissioning Report			
Contract No.:	HY/2019/13	RISC No.:	33297
Project:	Central Kowloon Route - Buildings, Electrical and Mechanical	Date:	15/4/2025
Location:	YVB / HVB / KVB	Room Name:	Plenum 3
T&C Plan Ref. No:	J3883-TVS-S-06283	Page:	
Ref. Dwg. No.:			

Part 4 : Functional and Performance Tests for HV Power Supply Units (Sheet 1 of 5)

A) Maximum Voltage Withstand Test for ESP Cell (TCP Section 4.6.1)

From:	ESP HV Switch Room 01 / 02	To:	APS Plenum No.01 / 02 / 03 Sub-assembly A / B / C / D / E

Step 1 & 3 - Insulation Resistance Test before and after the Maximum Voltage Withstand Test

Items	Circuit No. or Details of Equipment	Insulation Resistance (MΩ)	
		Before Max. Withstand Tests	After Max. Withstand Tests
1	(1st Col. Ionizer to Earth)	170 (Lower 3 ESP Cell) / 194 (Upper 3 ESP Cell)	91.4 (Lower 3 ESP Cell) / 160 (Upper 3 ESP Cell)
2	(2nd Col. Ionizer to Earth)	179 (Lower 3 ESP Cell) / 309 (Upper 3 ESP Cell)	72.8 (Lower 3 ESP Cell) / 72 (Upper 3 ESP Cell)
3	(3rd Col. Ionizer to Earth)	133 (Lower 3 ESP Cell) / 136 (Upper 3 ESP Cell)	62.6 (Lower 3 ESP Cell) / 64.6 (Upper 3 ESP Cell)
4	(1st to 3rd Col. Collector the Earth)	71.3 (1st Col.) / 50.1 (2nd Col.) / 50.7 (3rd Col.)	105 (1st Col.) / 76.7 (2nd Col.) / 79.3 (3rd Col.)

Step 2 - Maximum Voltage Withstand Test

Items	Test Voltage (kV DC)	Duration (min)	Measured Voltage (kV DC)	Test Result
1	20 (Ionizer)	1	20.16 / 20.15	P / F / NA
2	20 (Ionizer)		20.16 / 20.17	P / F / NA
3	20 (Ionizer)		20.16 / 20.17	P / F / NA
4	8 (Collector)	1	7.53	P / F / NA

B) List of Testing Equipment / Instruments

Type	Model	Serial No	Calibration Cert. No	Date of Cert.
HV insulation tester	AR3125	6819355	KS2525021278001	26/02/2025
HV DC Voltage Meter	HVP-40DM	20240071	AC2202505030801	03/03/2025

Remark: P / F / NA = Pass / Fail / Not Applicable
The passing criteria for the test is passing the insulation test after for maximum voltage withstand test.
The insulation resistance is over 1000MOhm (*) for HV DC Cable and 30MOhm for ESP Cell

Comment:

	Name:	Signature:	Date:
Test / Checked By : REW No.: Grade (Name of CTA Representative)	Ho Tung		15/4/2025
Witnessed By : (Name of JEC Representative)	Lucy Li		15/4/2025
Witnessed By : (Name of GCL)	Raymond Lau		15/4/2025
Witnessed By : (Name of AMMJV)	Sam Lui		15/4/2025
Witnessed By : (Name of)			
Witnessed By : (Name of)			

Gammon

CTA INTERNATIONAL AS

Air Purification System – HV Power Supply Units Test & Commissioning Report			
Contract No.:	HY/2019/13	RISC No.:	33297
Project:	Central Kowloon Route - Buildings, Electrical and Mechanical	Date:	15/4/2025
Location:	YVB / HVB / KVB	Room Name:	Plenum 3
T&C Plan Ref. No:	JS883-TVS-S-06283	Page:	
Ref. Dwg. No.:			

Part 4 : Functional and Performance Tests for HV Power Supply Units (Sheet 1 of 5)

A) Maximum Voltage Withstand Test for ESP Cell (TCP Section 4.6.1) 2

From:	ESP HV Switch Room 01 / 02	To:	APS Plenum No.01 / 02 / 03 Sub-assembly A / B / C / D / E

Step 1 & 3 - Insulation Resistance Test before and after the Maximum Voltage Withstand Test

Items	Circuit No. or Details of Equipment	Insulation Resistance (MΩ)	
		Before Max. Withstand Tests	After Max. Withstand Tests
1	(1st Col. Ionizer to Earth)	230 (Lower 3 ESP Cell) / 127 (Upper 3 ESP Cell)	111 (Lower 3 ESP Cell) / 80.3 (Upper 3 ESP Cell)
2	(2nd Col. Ionizer to Earth)	249 (Lower 3 ESP Cell) / 183 (Upper 3 ESP Cell)	147 (Lower 3 ESP Cell) / 122 (Upper 3 ESP Cell)
3	(3rd Col. Ionizer to Earth)	244 (Lower 3 ESP Cell) / 265 (Upper 3 ESP Cell)	139 (Lower 3 ESP Cell) / 172 (Upper 3 ESP Cell)
4	(1st to 3rd Col. Collector the Earth)	80.3 (1st Col.) / 68.4 (2nd Col.) / 53.4 (3rd Col.)	98.3 (1st Col.) / 155 (2nd Col.) / 89.7 (3rd Col.)

Step 2 - Maximum Voltage Withstand Test

Items	Test Voltage (kV DC)	Duration (min)	Measured Voltage (kV DC)	Test Result
1	20 (Ionizer)	1	20.16 / 20.17	P / F / NA
2	20 (Ionizer)		20.16 / 20.16	P / F / NA
3	20 (Ionizer)		20.17 / 20.17	P / F / NA
4	8 (Collector)	1	7.52	P / F / NA

B) List of Testing Equipment / Instruments

Type	Model	Serial No	Calibration Cert. No	Date of Cert.
HV insulation tester	AR3125	6819355	KS2525021278D001	26/02/2025
HV DC Voltage Meter	HVP-40DM	20240071	ACZ20250503080I	03/03/2025

Remark: P / F / NA = Pass / Fail / Not Applicable
The passing criteria for the test is passing the insulation test after for maximum voltage withstand test.
The insulation resistance is over 1000MOhm (*) for HV DC Cable and 30MOhm for ESP Cell

Comment:

	Name:	Signature:	Date:
Test / Checked By : REW No.: Grade (Name of CTA Representative)	Ho Tuiy		15/4/2025
Witnessed By : (Name of JEC Representative)	Lung Li		15/4/2025
Witnessed By : (Name of GCL)	Raymond Lau		15/4/2025
Witnessed By : (Name of AMMJV)	Sam Li		15/4/2025
Witnessed By : (Name of)			
Witnessed By : (Name of)			

Gammon

CTA INTERNATIONAL AS

Air Purification System – HV Power Supply Units Test & Commissioning Report			
Contract No.:	HY/2019/13	RISC No.:	33297
Project:	Central Kowloon Route - Buildings, Electrical and Mechanical	Date:	15/4/2025
Location:	YVB / HVB / KVB	Room Name:	Plenum 3
T&C Plan Ref. No:	J3883-TVS-S-06283	Page:	
Ref. Dwg. No.:			

Part 4 : Functional and Performance Tests for HV Power Supply Units (Sheet 1 of 5)

A) Maximum Voltage Withstand Test for ESP Cell (TCP Section 4.6.1)

From:	ESP HV Switch Room 01 / 02	To:	APS Plenum No.01 / 02 / 03 Sub-assembly A / B / C / D / E

Step 1 & 3 - Insulation Resistance Test before and after the Maximum Voltage Withstand Test

Items	Circuit No. or Details of Equipment	Insulation Resistance (MΩ)	
		Before Max. Withstand Tests	After Max. Withstand Tests
1	(1st Col. Ionizer to Earth)	150 (Lower 3 ESP Cell) / 273 (Upper 3 ESP Cell)	123 (Lower 3 ESP Cell) / 157 (Upper 3 ESP Cell)
2	(2nd Col. Ionizer to Earth)	233 (Lower 3 ESP Cell) / 319 (Upper 3 ESP Cell)	150 (Lower 3 ESP Cell) / 137 (Upper 3 ESP Cell)
3	(3rd Col. Ionizer to Earth)	273 (Lower 3 ESP Cell) / 379 (Upper 3 ESP Cell)	191 (Lower 3 ESP Cell) / 176 (Upper 3 ESP Cell)
4	(1st to 3rd Col. Collector the Earth)	48.0 (1st Col.) / 98.3 (2nd Col.) / 40.6 (3rd Col.)	51.8 (1st Col.) / 149 (2nd Col.) / 56.3 (3rd Col.)

Step 2 - Maximum Voltage Withstand Test

Items	Test Voltage (kV DC)	Duration (min)	Measured Voltage (kV DC)	Test Result
1	20 (Ionizer)	1	20.17 / 20.17	P / F / NA
2	20 (Ionizer)		20.17 / 20.17	P / F / NA
3	20 (Ionizer)		20.17 / 20.17	P / F / NA
4	8 (Collector)	1	7.52	P / F / NA

B) List of Testing Equipment / Instruments

Type	Model	Serial No	Calibration Cert. No	Date of Cert.
HV insulation tester	AR3125	6819355	KS2525021278D001	26/02/2025
HV DC Voltage Meter	HVP-400M	20240071	AC2202505030801	03/03/2025

Remark: P / F / NA = Pass / Fail / Not Applicable
The passing criteria for the test is passing the insulation test after for maximum voltage withstand test.
The insulation resistance is over 1000MOhm (*) for HV DC Cable and 30MOhm for ESP Cell

Comment:

	Name:	Signature:	Date:
Test / Checked By : REW No.: Grade (Name of CTA Representative)	Ho Tung		15/4/2025
Witnessed By : (Name of JEC Representative)	Lucy Li	Li	15/4/2025
Witnessed By : (Name of GCL)	Raymond Lau		15/4/2025
Witnessed By : (Name of AMMS)	Sam Lai		15/4/2025
Witnessed By : (Name of)			
Witnessed By : (Name of)			

Gammon

CTA INTERNATIONAL AS CLEAN TUNNEL AIR

Air Purification System – HV Power Supply Units Test & Commissioning Report			
Contract No.:	HY/2019/13	RISC No.:	33297
Project:	Central Kowloon Route - Buildings, Electrical and Mechanical	Date:	15/4/2025
Location:	YVB / HVB / KVB	Room Name:	Plenum 3
T&C Plan Ref. No:	J3883-TVS-S-06283	Page:	
Ref. Dwg. No.:			

Part 4 : Functional and Performance Tests for HV Power Supply Units (Sheet 1 of 5)

A) Maximum Voltage Withstand Test for ESP Cell (TCP Section 4.6.1)

From:	ESP HV Switch Room 01 / 02	To:	APS Plenum No.01 / 02 / 03 Sub-assembly A / B / C / D / E (4)

Step 1 & 3 - Insulation Resistance Test before and after the Maximum Voltage Withstand Test

Items	Circuit No. or Details of Equipment	Insulation Resistance (MΩ)	
		Before Max. Withstand Tests	After Max. Withstand Tests
1	(1st Col. Ionizer to Earth)	142 (Lower 3 ESP Cell) / 150 (Upper 3 ESP Cell)	126 (Lower 3 ESP Cell) / 92.4 (Upper 3 ESP Cell)
2	(2nd Col. Ionizer to Earth)	162 (Lower 3 ESP Cell) / 325 (Upper 3 ESP Cell)	143 (Lower 3 ESP Cell) / 169 (Upper 3 ESP Cell)
3	(3rd Col. Ionizer to Earth)	176 (Lower 3 ESP Cell) / 157 (Upper 3 ESP Cell)	141 (Lower 3 ESP Cell) / 126 (Upper 3 ESP Cell)
4	(1st to 3rd Col. Collector the Earth)	60.3 (1st Col.) / 55.4 (2nd Col.) / 51.6 (3rd Col.)	45.7 (1st Col.) / 75.2 (2nd Col.) / 61.3 (3rd Col.)

Step 2 - Maximum Voltage Withstand Test

Items	Test Voltage (kV DC)	Duration (min)	Measured Voltage (kV DC)	Test Result
1	20 (Ionizer)	1	20.17 / 20.18	P / F / NA
2	20 (Ionizer)		20.17 / 20.17	P / F / NA
3	20 (Ionizer)		20.17 / 20.17	P / F / NA
4	8 (Collector)	1	7.42	P / F / NA

B) List of Testing Equipment / Instruments

Type	Model	Serial No	Calibration Cert. No	Date of Cert.
HV insulation tester	AR3125	6819355	KS2525021278D001	26/02/2025
HV DC Voltage Meter	HVP-400M	20240021	AC220250503080 1	03/03/2025

Remark: P / F / NA = Pass / Fail / Not Applicable
The passing criteria for the test is passing the insulation test after for maximum voltage withstand test.
The insulation resistance is over 1000MOhm (*) for HV DC Cable and 30MOhm for ESP Cell

Comment:

	Name:	Signature:	Date:
Test / Checked By : REW No.: Grade (Name of CTA Representative)	Ho Tung		15/4/2025
Witnessed By : (Name of JEC Representative)	Lucy Li		15/4/2025
Witnessed By : (Name of GCL)	Raymond Lam		15/4/2025
Witnessed By : (Name of AMMSV)	Sam Lui		15/4/2025
Witnessed By : (Name of)			
Witnessed By : (Name of)			

Gammon

CTA INTERNATIONAL AS CLEAN TUNNEL AIR

Air Purification System – HV Power Supply Units Test & Commissioning Report

Contract No.:	HY/2019/13	RISC No.:	33297
Project:	Central Kowloon Route - Buildings, Electrical and Mechanical	Date:	15/4/2025
Location:	YVB / HVB / KVB	Room Name:	Plenum 3
T&C Plan Ref. No:	J3883-T/S-5-06283	Page:	
Ref. Dwg. No.:			

Part 4 : Functional and Performance Tests for HV Power Supply Units (Sheet 1 of 5)

A) Maximum Voltage Withstand Test for ESP Cell (TCP Section 4.6.1)

From:	ESP HV Switch Room 01 / 02	To:	APS Plenum No.01 / 02 / 03 Sub-assembly A / B / C / D / E

Step 1 & 3 - Insulation Resistance Test before and after the Maximum Voltage Withstand Test

Items	Circuit No. or Details of Equipment	Insulation Resistance (MΩ)	
		Before Max. Withstand Tests	After Max. Withstand Tests
1	(1st Col. Ionizer to Earth)	264 (Lower 3 ESP Cell) / 350 (Upper 3 ESP Cell)	237 (Lower 3 ESP Cell) / 196 (Upper 3 ESP Cell)
2	(2nd Col. Ionizer to Earth)	259 (Lower 3 ESP Cell) / 50.3 (Upper 3 ESP Cell)	191 (Lower 3 ESP Cell) / 712 (Upper 3 ESP Cell)
3	(3rd Col. Ionizer to Earth)	389 (Lower 3 ESP Cell) / 156 (Upper 3 ESP Cell)	390 (Lower 3 ESP Cell) / 136 (Upper 3 ESP Cell)
4	(1st to 3rd Col. Collector the Earth)	33.4 (1st Col.) / 34.9 (2nd Col.) / 54.4 (3rd Col.)	81.0 (1st Col.) / 69.3 (2nd Col.) / 93.2 (3rd Col.)

Step 2 - Maximum Voltage Withstand Test

Items	Test Voltage (kV DC)	Duration (min)	Measured Voltage (kV DC)	Test Result
1	20 (Ionizer)	1	20.15 / 20.18	P / F / NA
2	20 (Ionizer)		20.17 / 20.17	P / F / NA
3	20 (Ionizer)		20.17 / 20.18	P / F / NA
4	8 (Collector)	1	7.52	P / F / NA

B) List of Testing Equipment / Instruments

Type	Model	Serial No	Calibration Cert. No	Date of Cert.
HV insulation tester	AR3125	6819355	KS252502127800 1	26/02/2025
HV DC Voltage Meter	HVP-40DM	20240071-	AC220250503080 1	03/03/2025

Remark: P / F / NA = Pass / Fail / Not Applicable
The passing criteria for the test is passing the insulation test after for maximum voltage withstand test.
The insulation resistance is over 1000MOhm (*) for HV DC Cable and 30MOhm for ESP Cell

Comment:

Test / Checked By : REW No.: Grade (Name of CTA Representative)	Name: Ho Tung	Signature:	Date: 15/4/2025
Witnessed By : (Name of JEC Representative)	Name: Lucy Li	Signature:	Date: 15/4/2025
Witnessed By : (Name of GCL)	Name: Raymond Lau	Signature:	Date: 15/4/2025
Witnessed By : (Name of AMMSL)	Name: Sam Lui	Signature:	Date: 15/4/2025
Witnessed By : (Name of)	Name:	Signature:	Date:
Witnessed By : (Name of)	Name:	Signature:	Date:

Gammon

CTA INTERNATIONAL AS CLEAN TUNNEL AIR

Air Purification System – HV Power Supply Units Test & Commissioning Report			
Contract No.:	HY/2019/13	RISC No.:	33297
Project:	Central Kowloon Route - Buildings, Electrical and Mechanical	Date:	15/4/2025
Location:	YVB / HVB / KVB	Room Name:	Plenum 3
T&C Plan Ref. No:	J3883-TVS-S-06283	Page:	
Ref. Dwg. No.:			

Part 4 : Functional and Performance Tests for HV Power Supply Units (Sheet 1 of 5)

A) Maximum Voltage Withstand Test for ESP Cell (TCP Section 4.6.1)

From:	ESP HV Switch Room 01 / 02	To:	APS Plenum No.01 / 02 / 03 Sub-assembly A / B / C / D / E

Step 1 & 3 - Insulation Resistance Test before and after the Maximum Voltage Withstand Test

Items	Circuit No. or Details of Equipment	Insulation Resistance (MΩ)	
		Before Max. Withstand Tests	After Max. Withstand Tests
1	(1st Col. Ionizer to Earth)	170 (Lower 3 ESP Cell) / 194 (Upper 3 ESP Cell)	91.4 (Lower 3 ESP Cell) / 160 (Upper 3 ESP Cell)
2	(2nd Col. Ionizer to Earth)	179 (Lower 3 ESP Cell) / 309 (Upper 3 ESP Cell)	72.8 (Lower 3 ESP Cell) / 72 (Upper 3 ESP Cell)
3	(3rd Col. Ionizer to Earth)	133 (Lower 3 ESP Cell) / 136 (Upper 3 ESP Cell)	62.6 (Lower 3 ESP Cell) / 64.6 (Upper 3 ESP Cell)
4	(1st to 3rd Col. Collector the Earth)	71.3 (1st Col.) / 50.1 (2nd Col.) / 50.7 (3rd Col.)	105 (1st Col.) / 76.7 (2nd Col.) / 79.3 (3rd Col.)

Step 2 - Maximum Voltage Withstand Test

Items	Test Voltage (kV DC)	Duration (min)	Measured Voltage (kV DC)	Test Result
1	20 (Ionizer)	1	20.16 / 20.15	P / F / NA
2	20 (Ionizer)		20.16 / 20.17	P / F / NA
3	20 (Ionizer)		20.16 / 20.17	P / F / NA
4	8 (Collector)	1	7.53	P / F / NA

B) List of Testing Equipment / Instruments

Type	Model	Serial No	Calibration Cert. No	Date of Cert.
HV insulation tester	AR3125	6819355	KS2525021278D001	26/02/2025
HV DC Voltage Meter	HVP-40DM	20240071-	ACZ20250503080I	03/03/2025

Remark: P / F / NA = Pass / Fail / Not Applicable
The passing criteria for the test is passing the insulation test after for maximum voltage withstand test.
The insulation resistance is over 1000MOhm (*) for HV DC Cable and 30MOhm for ESP Cell

Comment:

	Name:	Signature:	Date:
Test / Checked By : REW No.: Grade (Name of CTA Representative)	Ho Tung		15/4/2025
Witnessed By : (Name of JEC Representative)	Lucy Li		15/4/2025
Witnessed By : (Name of GCL)	Raymond Lau		15/4/2025
Witnessed By : (Name of AMMJV)	Sam Lui		15/4/2025
Witnessed By : (Name of)			
Witnessed By : (Name of)			

Gammon

CTA INTERNATIONAL AS CLEAN TUNNEL AIR

Air Purification System – HV Power Supply Units Test & Commissioning Report			
Contract No.:	HY/2019/13	RISC No.:	33297
Project:	Central Kowloon Route - Buildings, Electrical and Mechanical	Date:	15/4/2025
Location:	YVB / HVB / KVB	Room Name:	Plenum 3
T&C Plan Ref. No:	J3883-TVS-S-06283	Page:	
Ref. Dwg. No.:			

Part 4 : Functional and Performance Tests for HV Power Supply Units (Sheet 1 of 5)

A) Maximum Voltage Withstand Test for ESP Cell (TCP Section 4.6.1) 2

From:	ESP HV Switch Room 01 / 02	To:	APS Plenum No.01 / 02 / 03 Sub-assembly A / B / C / D / E

Step 1 & 3 - Insulation Resistance Test before and after the Maximum Voltage Withstand Test

Items	Circuit No. or Details of Equipment	Insulation Resistance (MΩ)	
		Before Max. Withstand Tests	After Max. Withstand Tests
1	(1st Col. Ionizer to Earth)	230 (Lower 3 ESP Cell) / 127 (Upper 3 ESP Cell)	111 (Lower 3 ESP Cell) / 80.3 (Upper 3 ESP Cell)
2	(2nd Col. Ionizer to Earth)	249 (Lower 3 ESP Cell) / 183 (Upper 3 ESP Cell)	147 (Lower 3 ESP Cell) / 122 (Upper 3 ESP Cell)
3	(3rd Col. Ionizer to Earth)	244 (Lower 3 ESP Cell) / 265 (Upper 3 ESP Cell)	139 (Lower 3 ESP Cell) / 172 (Upper 3 ESP Cell)
4	(1st to 3rd Col. Collector the Earth)	80.3 (1st Col.) / 68.4 (2nd Col.) / 53.4 (3rd Col.)	98.3 (1st Col.) / 155 (2nd Col.) / 89.7 (3rd Col.)

Step 2 - Maximum Voltage Withstand Test

Items	Test Voltage (kV DC)	Duration (min)	Measured Voltage (kV DC)	Test Result
1	20 (Ionizer)	1	20.16 / 20.17	P / F / NA
2	20 (Ionizer)		20.16 / 20.16	P / F / NA
3	20 (Ionizer)		20.17 / 20.17	P / F / NA
4	8 (Collector)	1	7.52	P / F / NA

B) List of Testing Equipment / Instruments

Type	Model	Serial No	Calibration Cert. No	Date of Cert.
HV insulation tester	AR3125	6819355	KS2502127 8D001	26/02/2025
HV DC Voltage Meter	HVP-40DM	20240071	ACZ20250503080 1	03/03/2025

Remark: P / F / NA = Pass / Fail / Not Applicable
The passing criteria for the test is passing the insulation test after for maximum voltage withstand test.
The insulation resistance is over 1000MOhm (*) for HV DC Cable and 30MOhm for ESP Cell

Comment:

	Name:	Signature:	Date:
Test / Checked By : REW No.: Grade (Name of CTA Representative)	Ho Tuiy		15/4/2025
Witnessed By : (Name of JEC Representative)	Lung Li	Li	15/4/2025
Witnessed By : (Name of GCL)	Raymond Lau		15/4/2025
Witnessed By : (Name of AMSL)	Sam Li		15/4/2025
Witnessed By : (Name of)			
Witnessed By : (Name of)			

Gammon

CTA INTERNATIONAL AS

Air Purification System – HV Power Supply Units Test & Commissioning Report			
Contract No.:	HY/2019/13	RISC No.:	33297
Project:	Central Kowloon Route - Buildings, Electrical and Mechanical	Date:	15/4/2025
Location:	YVB / HVB / KVB	Room Name:	Plenum 3
T&C Plan Ref. No:	J3883-TVS-S-00283	Page:	
Ref. Dwg. No.:			

Part 4 : Functional and Performance Tests for HV Power Supply Units (Sheet 1 of 5)

A) Maximum Voltage Withstand Test for ESP Cell (TCP Section 4.6.1)

From:	ESP HV Switch Room 01 / 02	To:	APS Plenum No.01 / 02 / 03 Sub-assembly A / B / C / D / E

Step 1 & 3 - Insulation Resistance Test before and after the Maximum Voltage Withstand Test

Items	Circuit No. or Details of Equipment	Insulation Resistance (MΩ)	
		Before Max. Withstand Tests	After Max. Withstand Tests
1	(1st Col. Ionizer to Earth)	150 (Lower 3 ESP Cell) / 273 (Upper 3 ESP Cell)	123 (Lower 3 ESP Cell) / 157 (Upper 3 ESP Cell)
2	(2nd Col. Ionizer to Earth)	233 (Lower 3 ESP Cell) / 319 (Upper 3 ESP Cell)	150 (Lower 3 ESP Cell) / 137 (Upper 3 ESP Cell)
3	(3rd Col. Ionizer to Earth)	273 (Lower 3 ESP Cell) / 379 (Upper 3 ESP Cell)	191 (Lower 3 ESP Cell) / 176 (Upper 3 ESP Cell)
4	(1st to 3rd Col. Collector the Earth)	48.0 (1st Col.) / 98.3 (2nd Col.) / 40.6 (3rd Col.)	51.8 (1st Col.) / 149 (2nd Col.) / 56.3 (3rd Col.)

Step 2 - Maximum Voltage Withstand Test

Items	Test Voltage (kV DC)	Duration (min)	Measured Voltage (kV DC)	Test Result
1	20 (Ionizer)	1	20.17 / 20.17	P / F / NA
2	20 (Ionizer)		20.17 / 20.17	P / F / NA
3	20 (Ionizer)		20.17 / 20.17	P / F / NA
4	8 (Collector)	1	7.52	P / F / NA

B) List of Testing Equipment / Instruments

Type	Model	Serial No	Calibration Cert. No	Date of Cert.
HV insulation tester	AR3125	6819355	KS2525021278D001	26/02/2025
HV DC Voltage Meter	HVP-400M	20240071	AC2202505030801	03/03/2025

Remark: P / F / NA = Pass / Fail / Not Applicable
The passing criteria for the test is passing the insulation test after for maximum voltage withstand test.
The insulation resistance is over 1000MOhm (*) for HV DC Cable and 30MOhm for ESP Cell

Comment:

Test / Checked By : REW No.: Grade (Name of CTA Representative)	Name: Ho Tung	Signature:	Date: 15/4/2025
Witnessed By : (Name of JEC Representative)	Name: Lucy Li	Signature:	Date: 15/4/2025
Witnessed By : (Name of GCL)	Name: Raymond Lau	Signature:	Date: 15/4/2025
Witnessed By : (Name of AMMS)	Name: Sam Lai	Signature:	Date: 15/4/2025
Witnessed By : (Name of)	Name:	Signature:	Date:
Witnessed By : (Name of)	Name:	Signature:	Date:

Gammon

CTA INTERNATIONAL AS

Air Purification System – HV Power Supply Units Test & Commissioning Report			
Contract No.:	HY/2019/13	RISC No.:	33297
Project:	Central Kowloon Route - Buildings, Electrical and Mechanical	Date:	15/4/2025
Location:	YVB / HVB / KVB	Room Name:	Plenum 3
T&C Plan Ref. No:	J3883-TVS-S-06283	Page:	
Ref. Dwg. No.:			

Part 4 : Functional and Performance Tests for HV Power Supply Units (Sheet 1 of 5)

A) Maximum Voltage Withstand Test for ESP Cell (TCP Section 4.6.1) 4

From:	ESP HV Switch Room 01 / 02	To:	APS Plenum No.01 / 02 / 03 Sub-assembly A / B / C / D / E

Step 1 & 3 - Insulation Resistance Test before and after the Maximum Voltage Withstand Test

Items	Circuit No. or Details of Equipment	Insulation Resistance (MΩ)	
		Before Max. Withstand Tests	After Max. Withstand Tests
1	(1st Col. Ionizer to Earth)	142 (Lower 3 ESP Cell) / 150 (Upper 3 ESP Cell)	126 (Lower 3 ESP Cell) / 92.4 (Upper 3 ESP Cell)
2	(2nd Col. Ionizer to Earth)	162 (Lower 3 ESP Cell) / 325 (Upper 3 ESP Cell)	143 (Lower 3 ESP Cell) / 169 (Upper 3 ESP Cell)
3	(3rd Col. Ionizer to Earth)	176 (Lower 3 ESP Cell) / 157 (Upper 3 ESP Cell)	141 (Lower 3 ESP Cell) / 126 (Upper 3 ESP Cell)
4	(1st to 3rd Col. Collector the Earth)	60.3 (1st Col.) / 55.4 (2nd Col.) / 51.6 (3rd Col.)	95.7 (1st Col.) / 75.2 (2nd Col.) / 61.3 (3rd Col.)

Step 2 - Maximum Voltage Withstand Test

Items	Test Voltage (kV DC)	Duration (min)	Measured Voltage (kV DC)	Test Result
1	20 (Ionizer)	1	20.17 / 20.18	P / F / NA
2	20 (Ionizer)		20.17 / 20.17	P / F / NA
3	20 (Ionizer)		20.17 / 20.17	P / F / NA
4	8 (Collector)	1	7.42	P / F / NA

B) List of Testing Equipment / Instruments

Type	Model	Serial No	Calibration Cert. No	Date of Cert.
HV insulation tester	AR3125	6819355	KS2525021278D001	26/02/2025
HV DC Voltage Meter	HVP-40DM	20240021	AC2-20250503080 1	03/03/2025

Remark: P / F / NA = Pass / Fail / Not Applicable
The passing criteria for the test is passing the insulation test after for maximum voltage withstand test.
The insulation resistance is over 1000MOhm (*) for HV DC Cable and 30MOhm for ESP Cell

Comment:

Test / Checked By : REW No.: Grade (Name of CTA Representative)	Name: Ho Tung	Signature:	Date: 15/4/2025
Witnessed By : (Name of JEC Representative)	Name: Lucy Li	Signature:	Date: 15/4/2025
Witnessed By : (Name of GCL)	Name: Raymond Lam	Signature:	Date: 15/4/2025
Witnessed By : (Name of AMSV)	Name: Sam Lui	Signature:	Date: 15/4/2025
Witnessed By : (Name of)	Name:	Signature:	Date:
Witnessed By : (Name of)	Name:	Signature:	Date:

Gammon

CTA INTERNATIONAL AS CLEAN TUNNEL AIR

Air Purification System – HV Power Supply Units Test & Commissioning Report			
Contract No.:	HY/2019/13	RISC No.:	33297
Project:	Central Kowloon Route - Buildings, Electrical and Mechanical	Date:	15/4/2025
Location:	YVB / HVB / KVB	Room Name:	Plenum 3
T&C Plan Ref. No:	J3883-TVS-S-06283	Page:	
Ref. Dwg. No.:			

Part 4 : Functional and Performance Tests for HV Power Supply Units (Sheet 1 of 5)

A) Maximum Voltage Withstand Test for ESP Cell (TCP Section 4.6.1)

From:	ESP HV Switch Room 01 / 02	To:	APS Plenum No.01 / 02 / 03 Sub-assembly A / B / C / D / E

Step 1 & 3 - Insulation Resistance Test before and after the Maximum Voltage Withstand Test

Items	Circuit No. or Details of Equipment	Insulation Resistance (MΩ)	
		Before Max. Withstand Tests	After Max. Withstand Tests
1	(1st Col. Ionizer to Earth)	264 (Lower 3 ESP Cell) / 350 (Upper 3 ESP Cell)	237 (Lower 3 ESP Cell) / 196 (Upper 3 ESP Cell)
2	(2nd Col. Ionizer to Earth)	259 (Lower 3 ESP Cell) / 50.3 (Upper 3 ESP Cell)	191 (Lower 3 ESP Cell) / 712 (Upper 3 ESP Cell)
3	(3rd Col. Ionizer to Earth)	389 (Lower 3 ESP Cell) / 156 (Upper 3 ESP Cell)	390 (Lower 3 ESP Cell) / 136 (Upper 3 ESP Cell)
4	(1st to 3rd Col. Collector the Earth)	33.4 (1st Col.) / 34.9 (2nd Col.) / 54.4 (3rd Col.)	81.0 (1st Col.) / 69.3 (2nd Col.) / 93.2 (3rd Col.)

Step 2 - Maximum Voltage Withstand Test

Items	Test Voltage (kV DC)	Duration (min)	Measured Voltage (kV DC)	Test Result
1	20 (Ionizer)	1	20.15 / 20.18	P / F / NA
2	20 (Ionizer)		20.17 / 20.17	P / F / NA
3	20 (Ionizer)		20.17 / 20.18	P / F / NA
4	8 (Collector)	1	7.52	P / F / NA

B) List of Testing Equipment / Instruments

Type	Model	Serial No	Calibration Cert. No	Date of Cert.
HV insulation tester	AR3125	6819355	KS25250212780001	26/02/2025
HV DC Voltage Meter	HVP-40DM	20240071	AC220250503080	03/03/2025

Remark: P / F / NA = Pass / Fail / Not Applicable
The passing criteria for the test is passing the insulation test after for maximum voltage withstand test.
The insulation resistance is over 1000MOhm (*) for HV DC Cable and 30MOhm for ESP Cell

Comment:

	Name:	Signature:	Date:
Test / Checked By : REW No.: Grade (Name of CTA Representative)	Ho Tung		15/4/2025
Witnessed By : (Name of JEC Representative)	Lucy Li		15/4/2025
Witnessed By : (Name of GCL)	Raymond Lam		15/4/2025
Witnessed By : (Name of AMMSC)	Sam Lui		15/4/2025
Witnessed By : (Name of)			
Witnessed By : (Name of)			

Gammon

CTA INTERNATIONAL AS CLEAN TUNNEL AIR

Air Purification System – HV Power Supply Units Test & Commissioning Report			
Contract No.:	HY/2019/13	RISC No.:	33297A
Project:	Central Kowloon Route - Buildings, Electrical and Mechanical	Date:	~~15/4/2025~~ 15/4/2025
Location:	YVB / HVB / KVB	Room Name:	
T&C Plan Ref. No:	J3883-TVS-S-06283	Page:	
Ref. Dwg. No.:			

Part 4 : Functional and Performance Tests for HV Power Supply Units (Sheet 2A of 5)

C) ESP HV Power Supply Cabinets Information

Cabinets ID:	YVB-APS3-ESP-PSC-01	Main Switch Rating:	80A
Location:	ESP HV Switch Room 01 / 02	Fed From:	YVB-DB-ESP03-1

D) Output Voltage Measurement for HV Power Supply Units (TCP Section 4.6.2)

Item	Circuit No. or Details of Equipment	Vol-meter Reading at PSU (kV)	Am-meter Reading of PSU (mA)	Measured Voltage (kV) at ESP	Result (see remark)
1	YVB-APS3-PSU-01A Subassembly 14kV (I1)	14	71.2	14	P / F
2	YVB-APS3-PSU-02A Subassembly 14kV (I2)	14	69.4	14	P / F
3	YVB-APS3-PSU-03A Subassembly 14kV (I3)	14	68.1	14	P / F
4	YVB-APS3-PSU-04A Subassembly 6.5kV (C)	6.5	10.2	6.5	P / F
5	YVB-APS3-PSU-05B Subassembly 14kV (I1)	14	70.1	14	P / F
6	YVB-APS3-PSU-06B Subassembly 14kV (I2)	14	69.5	14	P / F
7	YVB-APS3-PSU-07B Subassembly 14kV (I3)	14	68.2	14	P / F
8	YVB-APS3-PSU-08B Subassembly 6.5kV (C)	6.5	11.2	6.5	P / F
9	YVB-APS3-PSU-09C Subassembly 14kV (I1)	14	68.3	14	P / F
10	YVB-APS3-PSU-10C Subassembly 14kV (I2)	14	71.3	14	P / F

E) List of Testing Equipment / Instruments

Type	Model	Serial No	Calibration Cert. No	Date of Cert.
DC Voltage Meter	HVP-40DM	~~20230668~~ 20240071	~~ZD202508111226~~	~~11/08/2025~~
			ACZ20250303080 1	03/03/2025

Remark: P / F = Pass / Fail, measured output voltage for ionizer and for collector is±14kV ±5% 6.5kV ±5%

Comment:

Test / Checked By : REW No.: W133567 Grade B+H (Name of CTA Representative)	Name: Ho Tung	Signature: Ho Tung	Date: 15/4/2025
Witnessed By : (Name of JEC Representative)	Name: John Chan	Signature:	Date: 15 APR 2025
Witnessed By : (Name of GCL)	Name: Boris Yan	Signature:	Date: 15 APR 2025
Witnessed By : (Name of HMMJV)	Name: Tam Ling kit	Signature:	Date: 15 APR 2025
Witnessed By : (Name of EMSD)	Name: WONG Cheong Shing CIE/TSC/1	Signature:	Date: 15 APR 2025
Witnessed By : (Name of)	Name:	Signature:	Date:

Gammon

CTA INTERNATIONAL AS CLEAN TUNNEL AIR

Air Purification System – HV Power Supply Units Test & Commissioning Report			
Contract No.:	HY/2019/13	RISC No.:	332497A
Project:	Central Kowloon Route - Buildings, Electrical and Mechanical	Date:	15/4/25
Location:	YVB / HVB / KVB	Room Name:	
T&C Plan Ref. No:	J3883-TVS-S-06283	Page:	
Ref. Dwg. No.:			

Part 4 : Functional and Performance Tests for HV Power Supply Units (Sheet 2B of 5)

C) ESP HV Power Supply Cabinets Information

Cabinets ID:	YVB-APS3-ESP-PSC-02	Main Switch Rating:	80A
Location:	ESP HV Switch Room 01 / 02	Fed From:	YVB-DB-ESP03-2

D) Output Voltage Measurement for HV Power Supply Units (TCP Section 4.6.2)

Item	Circuit No. or Details of Equipment	Vol-meter Reading at PSU (kV)	Am-meter Reading of PSU (mA)	Measured Voltage (kV) at ESP	Result (see remark)
1	Y VB-APS3-PSU-11C Subassembly 14 kV (I3)	14	71.4	14	P / F
2	Y VB-APS3-PSU-12C Subassembly 6.5 kV (C)	6.5	68.2	6.5	P / F
3	Y VB-APS3-PSU-13D Subassembly 14 kV (I1)	14	69.5	14	P / F
4	Y VB-APS3-PSU-14D Subassembly 14 kV (I2)	14	68.1	14	P / F
5	Y VB-APS3-PSU-15D Subassembly 14 kV (I3)	14	68.3	14	P / F
6	Y VB-APS3-PSU-16D Subassembly 6.5 kV (C)	6.5	10.3	6.5	P / F
7	Y VB-APS3-PSU-17E Subassembly 14 kV (I1)	14	68.3	14	P / F
8	Y VB-APS3-PSU-18E Subassembly 14 kV (I2)	14	68.5	14	P / F
9	Y VB-APS3-PSU-19E Subassembly 14 kV (I3)	14	69.6	14	P / F
10	Y VB-APS3-PSU-20E Subassembly 6.5 kV (C)	6.5	11.	6.5	P / F

E) List of Testing Equipment / Instruments

Type	Model	Serial No	Calibration Cert. No	Date of Cert.
DC Voltage Meter	HVP-40DM	~~20230668~~	~~ZD202508111226~~	~~11/08/2025~~
		20240071	ACZ20250303080 1	03/03/2025

Remark: P / F = Pass / Fail, measured output voltage for ionizer and for collector is±14kV ±5% 6.5kV ±5%

Comment:

Test / Checked By : REW No.: W133567 Grade B+H (Name of CTA Representative)	Name: Ho Tung	Signature:	Date: 15 APR 2025
Witnessed By : (Name of JEC Representative)	Name: John Chan	Signature:	Date: 15 APR 2025
Witnessed By : (Name of GCL)	Name: Boris Yan	Signature:	Date: 15 APR 2025
Witnessed By : (Name of AMMJV)	Name: Tam Wing Kit	Signature:	Date: 15 APR 2025
Witnessed By : (Name of EMSD)	Name: WONG Cheong Shing CIE/TSC/1	Signature:	Date: 15 APR 2025
Witnessed By : (Name of)	Name:	Signature:	Date:

Gammon

CTA INTERNATIONAL AS CLEAN TUNNEL AIR

Air Purification System – HV Power Supply Units Test & Commissioning Report			
Contract No.:	HY/2019/13	RISC No.:	332917A
Project:	Central Kowloon Route - Buildings, Electrical and Mechanical	Date:	15/4/25
Location:	YVB / HVB / KVB	Room Name:	
T&C Plan Ref. No:	J3883-TVS-S-06283	Page:	
Ref. Dwg. No.:			

Part 4 : Functional and Performance Tests for HV Power Supply Units (Sheet 4B of 5)

G) Functional Test for the Constant Current Control Mode Cabinets ID: Y_VB-APS3_-ESP-PSC-02

(TCP Section 4.6.4)

Item	Equipment Description	Functional Test for Constant Current Control Mode				
		Before Earth Fault Simulation		During Earth Fault Simulation		Constant Output Current Observed on PSU *
		"CC" not light up	Output Current on PSU	"CC" light up	Output Current on PSU	
1	Y VB-APS3-PSU-01A Subassembly 14kV (I1)	P / F	71.5 mA	P / F	0 mA	P / F
2	Y VB-APS3-PSU-02A Subassembly 14kV (I2)	P / F	68.5 mA	P / F	0 mA	P / F
3	Y VB-APS3-PSU-03A Subassembly 14kV (I3)	P / F	68.9 mA	P / F	0 mA	P / F
4	Y VB-APS3-PSU-04A Subassembly 6.5kV (C)	P / F	10.3 mA	P / F	0 mA	P / F
5	Y VB-APS3-PSU-05B Subassembly 14kV (I1)	P / F	71.3 mA	P / F	0 mA	P / F
6	Y VB-APS3-PSU-06B Subassembly 14kV (I2)	P / F	68.2 mA	P / F	0 mA	P / F
7	Y VB-APS3-PSU-07B Subassembly 14kV (I3)	P / F	68.8 mA	P / F	0 mA	P / F
8	Y VB-APS3-PSU-08B Subassembly 6.5kV (C)	P / F	10.3 mA	P / F	0 mA	P / F
9	Y VB-APS3-PSU-09C Subassembly 14kV (I1)	P / F	69.1 mA	P / F	0 mA	P / F
10	Y VB-APS3-PSU-10C Subassembly 14kV (I2)	P / F	68.4 mA	P / F	0 mA	P / F

Remarks: P / F = Pass / Fail,
* Acceptance Criteria for Output Current during the Earth Fault Simulation is ± 5% of before the Fault

Comment:

Test / Checked By : REW No.: W133567 Grade B+H (Name of CTA Representative)	Name: Ho Tung	Signature:	Date: 15 APR 2025
Witnessed By : (Name of JEC Representative)	Name: John Chan	Signature:	Date: 15 APR 2025
Witnessed By : (Name of GCL)	Name: Boris Yan	Signature:	Date: 15 APR 2025
Witnessed By : (Name of AMMTV)	Name: Tam Wing kit	Signature:	Date: 15 APR 2025
Witnessed By : (Name of EMSD)	Name: WONG Cheong Shing CIE/TSC/1	Signature:	Date: 15 APR 2025
Witnessed By : (Name of)	Name:	Signature:	Date:

Gammon

CTA INTERNATIONAL AS

Air Purification System – HV Power Supply Units Test & Commissioning Report			
Contract No.:	HY/2019/13	RISC No.:	33297/A
Project:	Central Kowloon Route - Buildings, Electrical and Mechanical	Date:	15/4/25
Location:	YVB / HVB / KVB	Room Name:	
T&C Plan Ref. No:	J3883-TVS-S-06283	Page:	
Ref. Dwg. No.:			

Part 4 : Functional and Performance Tests for HV Power Supply Units (Sheet 4A of 5)

G) Functional Test for the Constant Current Control Mode Cabinets ID: Y VB-APS 3 -ESP-PSC-0 1

(TCP Section 4.6.4)

Item	Equipment Description	Functional Test for Constant Current Control Mode				
		Before Earth Fault Simulation		During Earth Fault Simulation		Constant Output Current Observed on PSU *
		"CC" not light up	Output Current on PSU	"CC" light up	Output Current on PSU	
1	Y VB-APS 3 -PSU-11C Subassembly 14 kV (I3)	(P) / F	71.5 mA	(P) / F	0 mA	(P) / F
2	Y VB-APS 3 -PSU-12C Subassembly 6.5 kV (C)	(P) / F	68.5 mA	(P) / F	0 mA	(P) / F
3	Y VB-APS 3 -PSU-13D Subassembly 14 kV (I1)	(P) / F	69.3 mA	(P) / F	0 mA	(P) / F
4	Y VB-APS 3 -PSU-14D Subassembly 14 kV (I2)	(P) / F	69.5 mA	(P) / F	0 mA	(P) / F
5	Y VB-APS 3 -PSU-15D Subassembly 14 kV (I3)	(P) / F	70.1 mA	(P) / F	0 mA	(P) / F
6	Y VB-APS 3 -PSU-16D Subassembly 6.5 kV (C)	(P) / F	10.4 mA	(P) / F	0 mA	(P) / F
7	Y VB-APS 3 -PSU-17E Subassembly 14 kV (I1)	(P) / F	69.8 mA	(P) / F	0 mA	(P) / F
8	Y VB-APS 3 -PSU-18E Subassembly 14 kV (I2)	(P) / F	69.5 mA	(P) / F	0 mA	(P) / F
9	Y VB-APS 3 -PSU-19E Subassembly 14 kV (I3)	(P) / F	71.2 mA	(P) / F	0 mA	(P) / F
10	Y VB-APS 3 -PSU-20E Subassembly 6.5 kV (C)	(P) / F	10.9 mA	(P) / F	0 mA	(P) / F

Remarks: P / F = Pass / Fail,
* Acceptance Criteria for Output Current during the Earth Fault Simulation is ± 5% of before the Fault

Comment:

Test / Checked By : REW No.: W133567 Grade B+H (Name of CTA Representative)	Name: Ho Tung	Signature:	Date: 15 APR 2025
Witnessed By : (Name of JEC Representative)	Name: John Chan	Signature:	Date: 15 APR 2025
Witnessed By : (Name of GCL)	Name: Boris Yan	Signature:	Date: 15 APR 2025
Witnessed By : (Name of AMMTV)	Name: Tam Wing kit	Signature:	Date: 15 APR 2025
Witnessed By : (Name of EMSD)	Name: WONG Cheong Shing CIE/TSC/1	Signature:	Date: 15 APR 2025
Witnessed By : (Name of)	Name:	Signature:	Date:

Appendix D2 – Site Acceptance Test (SAT) Reports for HVB ESP HV Power Supply Units

Gammon

CTA INTERNATIONAL A/S

Air Purification System – HV Power Supply Units Test & Commissioning Report			
Contract No.:	HY/2019/13	RISC No.:	36849 A
Project:	Central Kowloon Route - Buildings, Electrical and Mechanical	Date:	14/08/2025
Location:	~~YVB~~ / HVB / ~~KVB~~	Room Name:	
T&C Plan Ref. No:	J3883-APS-S-I-17	Page:	
Ref. Dwg. No.:	J3883/MEP/APS/HVB/3203 & 3204		

Part 1 : Installation Inspection of ESP HV Power Supply Cabinets (Sheet 1 of 3)

A) ESP HV Power Supply Cabinets Information

Cabinets ID:	H VB-APS 1 -ESP-PSC-0 1&02	Main Switch Rating:	80A
Location:	ESP HV Switch Room (01) / 02	Supply Fed From:	HVB-DB-ESP01-1

B) Visual Inspection for ESP HV Power Supply Cabinets (TCP Section 4.3.1)

Items	Description of Inspection	Test Result
a.	Verify cabinets are installed per the accepted ESP HV Switch Room layout and plant room details	(P) / F / NA
b.	Check clearance space (≥1400mm front, ≥600mm rear) per EMSD CoP	(P) / F / NA
c.	Ensure cabinets are securely fixed, sealed, and free of damage, corrosion, wear, or dust	(P) / F / NA
d.	Check that the cabinet door, door handle and lock are installed and operated properly	(P) / F / NA

C) Visual Inspection for Cabinet Top Cooling Units (TCP Section 4.3.2)

a.	Check that the cabinet top cooling units are without visual damage, corrosion or sign of wear and tear	(P) / F / NA
b.	Check that the cabinet top cooling unit is securely fixed on top of the cabinets according to the accepted shop drawing and fabrication drawing	(P) / F / NA
c.	Check the exhaust lourve of the cabinet cooling unit to ensure no obstructions or blockages	(P) / F / NA
d.	Check the internal air duct is connected properly with the cabinet top cooling unit	(P) / F / NA
e.	Check the cable connection between cabinet and cooling unit are completed properly	(P) / F / NA

Remark: P / F / NA = Pass / Fail / Not Applicable

Comment:

Test / Checked By : REW No.: W133687 Grade B+H (Name of CTA Representative)	Name: HO TUNG	Signature:	Date: 14/08/2025
Witnessed By : (Name of JEC Representative)	Name: John Chan	Signature:	Date: 14 AUG 2025
Witnessed By : (Name of GCL)	Name: Raymond L.	Signature:	Date: 14 AUG 2025
Witnessed By : (Name of AMMJV)	Name: Andy Tang	Signature:	Date: 14 Aug 2025
Witnessed By : (Name of)	Name:	Signature:	Date:
Witnessed By : (Name of)	Name:	Signature:	Date:

Gammon

CTA INTERNATIONAL AS CLEAN TUNNEL AIR

Air Purification System – HV Power Supply Units Test & Commissioning Report			
Contract No.:	HY/2019/13	RISC No.:	36849 A
Project:	Central Kowloon Route - Buildings, Electrical and Mechanical	Date:	14/08/2025
Location:	~~YVB~~ / HVB / ~~KVB~~	Room Name:	
T&C Plan Ref. No:	J3883-APS-S-I-17	Page:	
Ref. Dwg. No.:	J3883/MEP/APS/HVB/3203 & 3204		

Part 1 : Installation Inspection of ESP HV Power Supply Cabinets (Sheet 2 of 3)		
Items	**Description of Inspection**	**Test Result**
D) Visual Inspection for ESP HV Power Supply Units (TCP Section 4.3.3)		
a.	No visible damage to impair safety	(P) / F / NA
b.	Check that the ESP HV power supply units are securely fixed inside the Power Supply Cabinet with no physical damage, or signs of deterioration	(P) / F / NA
c.	Check and record the equipment ID, manufacturer, model number, serial number and other information, showing on the name plate for cabinet top cooling unit and ESP HV power supply units, and record it the initial installed location on the test form	(P) / F / NA
E) Visual Inspection for Accessories inside the Cabinet (TCP Section 4.3.4)		
a.	Check that the limit switch is securely fixed on rear door of the cabinet with proper cabling works	(P) / F / NA
Remark: P / F / NA = Pass / Fail / Not Applicable		
Comment:		

Test / Checked By : REW No.: W133569 Grade BH1 (Name of CTA Representative)	Name: HO TUNG	Signature: Ho Tung	Date: 14/08/2025
Witnessed By : (Name of JEC Representative)	Name: John Chan	Signature:	Date: 14 AUG 2025
Witnessed By : (Name of)	Name: Raymond Lau	Signature:	Date: 14 AUG 2025
Witnessed By : (Name of AMMJV)	Name: Andy Tang	Signature:	Date: 14 AUG 2025
Witnessed By : (Name of)	Name:	Signature:	Date:
Witnessed By : (Name of)	Name:	Signature:	Date:

Gammon

CTA INTERNATIONAL AS

Air Purification System – HV Power Supply Units Test & Commissioning Report			
Contract No.:	HY/2019/13	RISC No.:	36849 A
Project:	Central Kowloon Route - Buildings, Electrical and Mechanical	Date:	14/08/2025
Location:	~~YVB~~ / HVB / ~~KVB~~	Room Name:	
T&C Plan Ref. No:	J3883-APS-S-I-17	Page:	
Ref. Dwg. No.:	J3883/MEP/APS/HVB/3203 & 3204		

Part 1 : Installation Inspection of ESP HV Power Supply Cabinets (Sheet 3A of 3)

F) Equipment List for HV Power Supply Cabinet (TCP Section 4.3.3)

Cabinets ID: H VB-APS 1 -ESP-PSC-0 1 **Main Switch Rating:** 80A

Location : ESP HV Switch Room 01 / 02 **Supply Fed From:** HVB-DB-ESP01-1

Item	Equipment ID / Description	Brand / Model No.		Serial No.	Check
1	19" Equipment Rack	Rittal		24244-02-13	☑
2	Top Cabinet Cooling Unit	Rittal	SK 3385.500	N/A	☑
3	H VB-APS 1 -PSU- 01 A Subassembly Ionizer 1	FUG	HCP 1600-20000 MOD	24244-01-121	☑
4	H VB-APS 1 -PSU- 02 A Subassembly Ionizer 2	FUG	HCP 1600-20000 MOD	24244-01-122	☑
5	H VB-APS 1 -PSU- 03 A Subassembly Ionizer 3	FUG	HCP 1600-20000 MOD	24244-01-123	☑
6	H VB-APS 1 -PSU- 04 A Subassembly Collector	FUG	HCP 1600-20000 MOD	24244-01-124	☑
7	H VB-APS 1 -PSU- 05 B Subassembly Ionizer 1	FUG	HCP 1600-20000 MOD	24244-01-125	☑
8	H VB-APS 1 -PSU- 06 B Subassembly Ionizer 2	FUG	HCP 1600-20000 MOD	24244-01-126	☑
9	H VB-APS 1 -PSU- 07 B Subassembly Ionizer 3	FUG	HCP 1600-20000 MOD	24244-01-127	☑
10	H VB-APS 1 -PSU- 08 B Subassembly Collector	FUG	HCP 1600-20000 MOD	24244-01-128	☑
11	H VB-APS 1 -PSU- 09 C Subassembly Ionizer 1	FUG	HCP 1600-20000 MOD	24244-01-129	☑
12	H VB-APS 1 -PSU- 10 C Subassembly Ionizer 2	FUG	HCP 1600-20000 MOD	24244-01-130	☑

Comment:

Test / Checked By : REW No.: W133569 Grade B+M (Name of CTA Representative)	Name: HO TUNG	Signature:	Date: 14/08/2025
Witnessed By : (Name of JEC Representative)	Name: John Chan	Signature:	Date: 14 AUG 2025
Witnessed By : (Name of Gee)	Name: Raymond Lau	Signature:	Date: 14 AUG 2025
Witnessed By : (Name of AMNDV)	Name: Andy Tang	Signature:	Date: 14 AUG 2025
Witnessed By : (Name of)	Name:	Signature:	Date:
Witnessed By : (Name of)	Name:	Signature:	Date:

Gammon

CTA INTERNATIONAL AS CLEAN TUNNEL AIR

Air Purification System – HV Power Supply Units Test & Commissioning Report			
Contract No.:	HY/2019/13	RISC No.:	36849 A
Project:	Central Kowloon Route - Buildings, Electrical and Mechanical	Date:	14/08/2025
Location:	~~YVB~~ / HVB / ~~KVB~~	Room Name:	
T&C Plan Ref. No:	J3883-APS-S-I-17	Page:	
Ref. Dwg. No.:	J3883/MEP/APS/HVB/3203 & 3204		

Part 1 : Installation Inspection of ESP HV Power Supply Cabinets (Sheet 3B of 3)

F) Equipment List for HV Power Supply Cabinet (TCP Section 4.3.3)

Cabinets ID: H VB-APS 1 -ESP-PSC-0 2		**Main Switch Rating:**	80A
Location : ESP HV Switch Room 01 / 02		**Supply Fed From:**	HVB-DB-ESP01-2

Item	Equipment ID / Description	Brand / Model No.		Serial No.	Check
1	19" Equipment Rack	Rittal		24244-02-14	☑
2	Top Cabinet Cooling Unit	Rittal	SK 3385.500	N/A	☑
3	H VB-APS 1 -PSU- 11 C Subassembly Ionizer 3	FUG	HCP 1600-20000 MOD	24244-01-131	☑
4	H VB-APS 1 -PSU- 12 C Subassembly Collector	FUG	HCP 1600-20000 MOD	24244-01-132	☑
5	H VB-APS 1 -PSU- 13 D Subassembly Ionizer 1	FUG	HCP 1600-20000 MOD	24244-01-133	☑
6	H VB-APS 1 -PSU- 14 D Subassembly Ionizer 2	FUG	HCP 1600-20000 MOD	24244-01-134	☑
7	H VB-APS 1 -PSU- 15 D Subassembly Ionizer 3	FUG	HCP 1600-20000 MOD	24244-01-135	☑
8	H VB-APS 1 -PSU- 16 D Subassembly Collector	FUG	HCP 1600-20000 MOD	24244-01-136	☑
9	H VB-APS 1 -PSU- 17 E Subassembly Ionizer 1	FUG	HCP 1600-20000 MOD	24244-01-137	☑
10	H VB-APS 1 -PSU- 18 E Subassembly Ionizer 2	FUG	HCP 1600-20000 MOD	24244-01-138	☑
11	H VB-APS 1 -PSU- 19 E Subassembly Ionizer 3	FUG	HCP 1600-20000 MOD	24244-01-139	☑
12	H VB-APS 1 -PSU- 20 E Subassembly Collector	FUG	HCP 1600-20000 MOD	24244-01-140	☑

Comment:

Test / Checked By : REW No.: W33587 Grade B+M (Name of CTA Representative)	Name: HO TUNG	Signature: Ho Tung	Date: 14/08/2025
Witnessed By : (Name of JEC Representative)	Name: John Chan	Signature:	Date: 14 AUG 2025
Witnessed By : (Name of Gee)	Name: Raymond Lau	Signature:	Date: 14 AUG 2025
Witnessed By : (Name of AMNJV)	Name: Andy Tang	Signature:	Date: 14 AUG 2025
Witnessed By : (Name of)	Name:	Signature:	Date:
Witnessed By : (Name of)	Name:	Signature:	Date:

Gammon

CTA INTERNATIONAL AS

Air Purification System – HV Power Supply Units Test & Commissioning Report			
Contract No.:	HY/2019/13	RISC No.:	36852
Project:	Central Kowloon Route - Buildings, Electrical and Mechanical	Date:	17/09/2025
Location:	YVB / HVB / KVB	Room Name:	HV Room 1
T&C Plan Ref. No:		Page:	
Ref. Dwg. No.:			

Part 3: Inspection and Test for Electrical Installations (Sheet 2A of 5)

B) Earth Loop Impedance Test (TCP Section 4.5.3)

ESP HV Power Supply Cabinets Information

Cabinets ID:	HVB-APS1-ESP-PSC-01	Main Switch Rating:	80A
Location:	ESP HV Switch Room 01 / 02	Supply Fed From:	HVB-DB-ESP01

Circuit No	Details of Equipment	Type of Protective Device	Rating	Earth Loop Impedance (Zs) (Ω)	Test Result
1	HVB-APS1-PSU-01 Subassembly I1	RCBO	16A SP	0.15	P / F / NA
2	HVB-APS1-PSU-02 Subassembly I2	RCBO	16A SP	0.15	P / F / NA
3	HVB-APS1-PSU-03 Subassembly I3	RCBO	16A SP	0.14	P / F / NA
4	HVB-APS1-PSU-04 Subassembly C	RCBO	16A SP	0.14	P / F / NA
5	HVB-APS1-PSU-05 Subassembly I1	RCBO	16A SP	0.15	P / F / NA
6	HVB-APS1-PSU-06 Subassembly I2	RCBO	16A SP	0.15	P / F / NA
7	HVB-APS1-PSU-07 Subassembly I3	RCBO	16A SP	0.16	P / F / NA
8	HVB-APS1-PSU-08 Subassembly C	RCBO	16A SP	0.15	P / F / NA
9	HVB-APS1-PSU-09 Subassembly I1	RCBO	16A SP	0.15	P / F / NA
10	HVB-APS1-PSU-10 Subassembly I2	RCBO	16A SP	0.16	P / F / NA

Remark: P / F / NA = Pass / Fail / Not Applicable
The Passing Criteria for the Max Earth Fault Loop Independence shall refer to EMSD COP.

Comment:

	Name:	Signature:	Date:
Test / Checked By : REW No.: W133567 Grade H (Name of CTA Representative)	Ho Tung		17/09/2025
Witnessed By : (Name of JEC Representative)	John Chan		17/09/2025
Witnessed By : (Name of GCL)	Raymond Lau		17/09/2025
Witnessed By : (Name of AMMJV)	Patrick Yung		17/09/2025
Witnessed By : (Name of)			
Witnessed By : (Name of)			

Gammon

CTA INTERNATIONAL AS

Air Purification System – HV Power Supply Units Test & Commissioning Report			
Contract No.:	HY/2019/13	RISC No.:	36852
Project:	Central Kowloon Route - Buildings, Electrical and Mechanical	Date:	17/09/2025
Location:	YVB / HVB / KVB	Room Name:	HV Room 1
T&C Plan Ref. No:		Page:	
Ref. Dwg. No.:			

Part 3: Inspection and Test for Electrical Installations (Sheet 2B of 5)

B) Earth Loop Impedance Test (TCP Section 4.5.3)

ESP HV Power Supply Cabinets Information

Cabinets ID:	HVB-APS1-ESP-PSC-02	Main Switch Rating:	80A
Location:	ESP HV Switch Room 01 / 02	Supply Fed From:	HVB-DB-ESP01

Circuit No	Details of Equipment	Type of Protective Device	Rating	Earth Loop Impedance (Zs) (Ω)	Test Result
1	HVB-APS1-PSU-11 Subassembly F3	RCBO	16A SP	0.13	P / F / NA
2	HVB-APS1-PSU-12 Subassembly C	RCBO	16A SP	0.14	P / F / NA
3	HVB-APS1-PSU-13 Subassembly F1	RCBO	16A SP	0.15	P / F / NA
4	HVB-APS1-PSU-14 Subassembly F2	RCBO	16A SP	0.14	P / F / NA
5	HVB-APS1-PSU-15 Subassembly F3	RCBO	16A SP	0.14	P / F / NA
6	HVB-APS1-PSU-16 Subassembly C	RCBO	16A SP	0.16	P / F / NA
7	HVB-APS1-PSU-17 Subassembly F1	RCBO	16A SP	0.15	P / F / NA
8	HVB-APS1-PSU-18 Subassembly F2	RCBO	16A SP	0.15	P / F / NA
9	HVB-APS1-PSU-19 Subassembly F3	RCBO	16A SP	0.18	P / F / NA
10	HVB-APS1-PSU-20 Subassembly C	RCBO	16A SP	0.18	P / F / NA

Remark: P / F / NA = Pass / Fail / Not Applicable
The Passing Criteria for the Max Earth Fault Loop Independence shall refer to EMSD COP.

Comment:

Test / Checked By : REW No.: W133567 Grade H (Name of CTA Representative)	Name: Ho Tung	Signature:	Date: 17/09/2025
Witnessed By : (Name of JEC Representative)	Name: John Chan	Signature:	Date: 17/09/2025
Witnessed By : (Name of GCL)	Name: Raymond Lau	Signature:	Date: 17/09/2025
Witnessed By : (Name of AMMJV)	Name: Patrick Yung	Signature:	Date: 17/09/2025
Witnessed By : (Name of)	Name:	Signature:	Date:
Witnessed By : (Name of)	Name:	Signature:	Date:

Gammon

CTA INTERNATIONAL AS CLEAN TUNNEL AIR

Air Purification System – HV Power Supply Units Test & Commissioning Report			
Contract No.:	HY/2019/13	RISC No.:	36852
Project:	Central Kowloon Route - Buildings, Electrical and Mechanical	Date:	17/09/2025
Location:	YVB / HVB / KVB	Room Name:	HV Room 1
T&C Plan Ref. No:		Page:	
Ref. Dwg. No.:			

Part 3: Inspection and Test for Electrical Installations (Sheet 3 of 5)

C) Functional Test of Residual Current Device (RCD) (TCP Section 4.5.3)

ESP HV Power Supply Cabinets Information

Cabinets ID:	HVB-APS1-ESP-PSC-01	Main Switch Rating:	80A
Location:	ESP HV Switch Room 01 / 02	Supply Fed From:	HVB-DB-ESP01

Circuit No. or Details of Equipment	Type of Protective Device	Rating	Polarity	RCD 50% (ms)	RCD 100% (ms)	Test Result
1	RCBO	16A SP	P / F / NA	P / F / NA	~~26.5~~ 26.5	P / F / NA
2	RCBO	16A SP	P / F / NA	P / F / NA	27.1	P / F / NA
3	RCBO	16A SP	P / F / NA	P / F / NA	26.3	P / F / NA
4	RCBO	16A SP	P / F / NA	P / F / NA	36.8	P / F / NA
5	RCBO	16A SP	P / F / NA	P / F / NA	27.3	P / F / NA
6	RCBO	16A SP	P / F / NA	P / F / NA	37	P / F / NA
7	RCBO	16A SP	P / F / NA	P / F / NA	36.6	P / F / NA
8	RCBO	16A SP	P / F / NA	P / F / NA	26.6	P / F / NA
9	RCBO	16A SP	P / F / NA	P / F / NA	26.7	P / F / NA
10	RCBO	16A SP	P / F / NA	P / F / NA	36.5	P / F / NA

Remark: P / F / NA = Pass / Fail / Not Applicable
Tripping time of RCD for 30mA leakage current shall be within 300ms.

Comment:

	Name:	Signature:	Date:
Test / Checked By : REW No.: W13356 Grade H (Name of CTA Representative)	Ho Tung		17/09/2025
Witnessed By : (Name of JEC Representative)	John Chan		17/09/2025
Witnessed By : (Name of GCL)	Raymond Lau		17/09/2025
Witness By : (Name of AMM IV)	Patrick Yung		17/09/2025
Witnessed By : (Name of)			
Witnessed By : (Name of)			

Gammon

CTA INTERNATIONAL AS CLEAN TUNNEL AIR

Air Purification System – HV Power Supply Units Test & Commissioning Report			
Contract No.:	HY/2019/13	RISC No.:	36852
Project:	Central Kowloon Route - Buildings, Electrical and Mechanical	Date:	17/09/2025
Location:	YVB / ~~HVB~~ / KVB	Room Name:	HV Room 1
T&C Plan Ref. No:		Page:	
Ref. Dwg. No.:			

Part 3: Inspection and Test for Electrical Installations (Sheet 3 of 5)

C) Functional Test of Residual Current Device (RCD) (TCP Section 4.5.3)

ESP HV Power Supply Cabinets Information

Cabinets ID:	HVB-APS 1 -ESP-PSC-0 2	Main Switch Rating:	80A
Location:	ESP HV Switch Room 01 / 02	Supply Fed From:	HVB-DB-ESP01

Circuit No. or Details of Equipment	Type of Protective Device	Rating	Polarity	RCD 50% (ms)	RCD 100% (ms)	Test Result
1	RCBO	16A SP	P / F / NA	P / F / NA	36.8	P / F / NA
2	RCBO	16A SP	P / F / NA	P / F / NA	37	P / F / NA
3	RCBO	16A SP	P / F / NA	P / F / NA	36.7	P / F / NA
4	RCBO	16A SP	P / F / NA	P / F / NA	27.2	P / F / NA
5	RCBO	16A SP	P / F / NA	P / F / NA	36.5	P / F / NA
6	RCBO	16A SP	P / F / NA	P / F / NA	36.8	P / F / NA
7	RCBO	16A SP	P / F / NA	P / F / NA	26.4	P / F / NA
8	RCBO	16A SP	P / F / NA	P / F / NA	36.6	P / F / NA
9	RCBO	16A SP	P / F / NA	P / F / NA	26.2	P / F / NA
10	RCBO	16A SP	P / F / NA	P / F / NA	18.3	P / F / NA

Remark: P / F / NA = Pass / Fail / Not Applicable
Tripping time of RCD for 30mA leakage current shall be within 300ms.

Comment:

Test / Checked By : REW No.: W133567 Grade H (Name of CTA Representative)	Name: Ho Tung	Signature:	Date: 17/09/2025
Witnessed By : (Name of JEC Representative)	Name: John Chan	Signature:	Date: 17/09/2025
Witnessed By : (Name of GCL)	Name: Raymond Lau	Signature:	Date: 17/09/2025
Witnessed By : (Name of AMM JV)	Name: Patrick Yung	Signature:	Date: 17/09/2025
Witnessed By : (Name of)	Name:	Signature:	Date:
Witnessed By : (Name of)	Name:	Signature:	Date:

Gammon

CIA INTERNATIONAL AS CLEAR TUNNEL AIR

Air Purification System – HV Power Supply Units Test & Commissioning Report			
Contract No.:	HY/2019/13	RISC No.:	36852
Project:	Central Kowloon Route - Buildings, Electrical and Mechanical	Date:	17/09/2025
Location:	YVB / HVB / KVB	Room Name:	HV Room 1
T&C Plan Ref. No:		Page:	
Ref. Dwg. No.:			

Part 3: Inspection and Test for Electrical Installations (Sheet 4 of 5)

D) Functional Test and Circuitry Check (TCP Section 4.5.3)

ESP HV Power Supply Cabinets Information

Cabinets ID:	HVB-APS 1 -ESP-PSC-0 1	Main Switch Rating:	80A
Location:	ESP HV Switch Room 01 / 02	Supply Fed From:	HVB-DB-ESP01

Circuit No. or Details of Equipment	Type of Protective Device	Rating	Isolator	MCB	RCD Test Button	Circuitry Check
1	RCBO	16A SP	P / F / NA	P / F / NA	P / F / NA	P / F / NA
2	RCBO	16A SP	P / F / NA	P / F / NA	P / F / NA	P / F / NA
3	RCBO	16A SP	P / F / NA	P / F / NA	P / F / NA	P / F / NA
4	RCBO	16A SP	P / F / NA	P / F / NA	P / F / NA	P / F / NA
5	RCBO	16A SP	P / F / NA	P / F / NA	P / F / NA	P / F / NA
6	RCBO	16A SP	P / F / NA	P / F / NA	P / F / NA	P / F / NA
7	RCBO	16A SP	P / F / NA	P / F / NA	P / F / NA	P / F / NA
8	RCBO	16A SP	P / F / NA	P / F / NA	P / F / NA	P / F / NA
9	RCBO	16A SP	P / F / NA	P / F / NA	P / F / NA	P / F / NA
10	RCBO	16A SP	P / F / NA	P / F / NA	P / F / NA	P / F / NA
Air conditioner	RCBO	16A SP	P / F / NA	P / F / NA	P / F / NA	P / F / NA

Remark: P / F / NA = Pass / Fail / Not Applicable

Comment:

Test / Checked By : REW No.: W133567 Grade H (Name of CTA Representative)	Name: Ho Tung	Signature:	Date: 17/09/2025
Witnessed By : (Name of JEC Representative)	Name: John Chan	Signature:	Date: 17/09/2025
Witnessed By : (Name of GCL)	Name: Roland Lau	Signature:	Date: 17/09/2025
Witnessed By : (Name of AMM JV)	Name: Patrick Yung	Signature:	Date: 17/09/2025
Witnessed By : (Name of)	Name:	Signature:	Date:
Witnessed By : (Name of)	Name:	Signature:	Date:

Gammon

CTA INTERNATIONAL AS CLEAN TUNNEL AIR

Air Purification System – HV Power Supply Units Test & Commissioning Report			
Contract No.:	HY/2019/13	RISC No.:	36882
Project:	Central Kowloon Route - Buildings, Electrical and Mechanical	Date:	17/09/2025
Location:	YVB / HVB / KVB	Room Name:	HV Room 1
T&C Plan Ref. No:		Page:	
Ref. Dwg. No.:			

Part 3: Inspection and Test for Electrical Installations (Sheet 4 of 5)

D) Functional Test and Circuitry Check (TCP Section 4.5.3)

ESP HV Power Supply Cabinets Information

Cabinets ID:	HVB-APS1-ESP-PSC-02	Main Switch Rating:	80A
Location:	ESP HV Switch Room 01 / 02	Supply Fed From:	HVB-DB-ESP01

Circuit No. or Details of Equipment	Type of Protective Device	Rating	Isolator	MCB	RCD Test Button	Circuitry Check
1	RCBO	16A SP	P / F / NA	P / F / NA	P / F / NA	P / F / NA
2	RCBO	16A SP	P / F / NA	P / F / NA	P / F / NA	P / F / NA
3	RCBO	16A SP	P / F / NA	P / F / NA	P / F / NA	P / F / NA
4	RCBO	16A SP	P / F / NA	P / F / NA	P / F / NA	P / F / NA
5	RCBO	16A SP	P / F / NA	P / F / NA	P / F / NA	P / F / NA
6	RCBO	16A SP	P / F / NA	P / F / NA	P / F / NA	P / F / NA
7	RCBO	16A SP	P / F / NA	P / F / NA	P / F / NA	P / F / NA
8	RCBO	16A SP	P / F / NA	P / F / NA	P / F / NA	P / F / NA
9	RCBO	16A SP	P / F / NA	P / F / NA	P / F / NA	P / F / NA
10	RCBO	16A SP	P / F / NA	P / F / NA	P / F / NA	P / F / NA
Air conditioner	RCBO	16A SP	P / F / NA	P / F / NA	P / F / NA	P / F / NA

Remark: P / F / NA = Pass / Fail / Not Applicable

Comment:

Test / Checked By : REW No.: W133567 Grade H (Name of CTA Representative)	Name: Ho Ting	Signature:	Date: 17/09/2025
Witnessed By : (Name of JEC Representative)	Name: John Chan	Signature:	Date: 17/09/2025
Witnessed By : (Name of GCL)	Name: Roland Lin	Signature:	Date: 17/09/2025
Witnessed By : (Name of AMMJV)	Name: Patrick Yung	Signature:	Date: 17/09/2025
Witnessed By : (Name of)	Name:	Signature:	Date:
Witnessed By : (Name of)	Name:	Signature:	Date:

Gammon

CTA INTERNATIONAL AS CLEAN TUNNEL AIR

Air Purification System – HV Power Supply Units Test & Commissioning Report

Contract No.:	HY/2019/13	RISC No.:	~~36855~~ A ~~36849A~~
Project:	Central Kowloon Route - Buildings, Electrical and Mechanical	Date:	14/08/2025 36851A
Location:	~~YVB~~ / HVB / ~~KVB~~	Room Name:	
T&C Plan Ref. No:	J3883-APS-S-I-17	Page:	
Ref. Dwg. No.:	J3883/MEP/APS/HVB/1603&1604&1605		

Part 2: Installation Inspection and Cable Tests for HV DC Cables (Sheet 1 of 2)

A) Visual Inspection (TCP Section 4.4.1)

Items	Description of Inspection	Test Result
a)	No visible damage to impair safety	(P) / F / NA
b)	Ensure all cables, HV connectors, cable glands & accessories are in good condition	(P) / F / NA
c)	All conductors are correctly and securely connected and identified, protected against mechanical damage, and adequately supported	(P) / F / NA

B) HV DC Cable Continuity Tests (TCP Section 4.4.2)

From: ESP HV Switch Room (01) / 02 To: APS Plenum No (01) / 02 / 03 Sub-assembly (A) / B / C / D / E

Items	Circuit No. or Details of Equipment	Cable Length (m)	Continuity Resistance (Ω) Measured	Calculated	Passing Criteria	Test Result
1	H VB-APS 1 -HVC- 01 Ionizer	36.5	0.76	0.38	0.894	(P) / F / NA
2	H VB-APS 1 -HVC- 02 Ionizer	36.5		0.38	0.894	(P) / F / NA
3	H VB-APS 1 -HVC- 03 Ionizer	35.5	0.74	0.37	0.87	(P) / F / NA
4	H VB-APS 1 -HVC- 04 Collector	35.5		0.37	0.87	(P) / F / NA

C) List of Testing Equipment / Instruments

Type	Model	Serial No	Calibration Cert. No	Date of Cert.
Digital Micro Ohmmeter	VT620C+	C242921984	ACZ202502220127	22/02/2025
Cable Fault Tester	LCT268-2(KM)	250219005	ACZ202503030802	22/02/2025

Remark: P / F / NA = Pass / Fail / Not Applicable
Insulation Resistance should be >1000MΩ, Continuity Resistance shall be < 0.0245Ω/m (B)

Comment: Calculation Formula = (Cable Length x Measured Resistance) / Total Cable Length
Passing Criteria = 0.0245*Cable Length

Test / Checked By : REW No.: W133567 Grade B+H (Name of CTA Representative)	Name: HO TUNG	Signature:	Date: 14/08/2025
Witnessed By : (Name of JEC Representative)	Name: John Chan	Signature:	Date: 14/08/2025
Witnessed By : (Name of GCL)	Name: Raymond Lau	Signature:	Date: 14/08/2025
Witnessed By : (Name of AMMJV)	Name: Andy Tang	Signature:	Date: 14/8/2025
Witnessed By : (Name of)	Name:	Signature:	Date:
Witnessed By : (Name of)	Name:	Signature:	Date:

Gammon

CTA INTERNATIONAL AS CLEAN TUNNEL A/S

Air Purification System – HV Power Supply Units Test & Commissioning Report			
Contract No.:	HY/2019/13	RISC No.:	~~36855A~~ ~~36849A~~ 36851A
Project:	Central Kowloon Route - Buildings, Electrical and Mechanical	Date:	14/08/2025
Location:	~~HVB~~ / HVB / ~~KVB~~	Room Name:	
T&C Plan Ref. No:	J3883-APS-S-I-17	Page:	
Ref. Dwg. No.:	J3883/MEP/APS/HVB/1603&1604&1605		

Part 2: Installation Inspection and Cable Tests for HV DC Cables (2 of 2)

D) Maximum Voltage Withstand Test for HV DC Cable (TCP Section 4.4.3)

Step 1 & 3 - Insulation Resistance Test before and after the Maximum Voltage Withstand Test

From: ESP HV Switch Room (01) / 02 To: APS Plenum No. (01) / 02 / 03 Sub-assembly (A) / B / C / D / E

Items	Circuit No. or Details of Equipment	Cable Length (m)	Insulation Resistance (MΩ) before Step 2	Insulation Resistance (MΩ) after Step 2	Test Result
1	H VB-APS 1 -HVC- 01 Ionizer	36.5	270G	256G	(P) / F / NA
2	H VB-APS 1 -HVC- 02 Ionizer	36.5	240G	255G	(P) / F / NA
3	H VB-APS 1 -HVC- 03 Ionizer	35.5	244G	224G	(P) / F / NA
4	H VB-APS 1 -HVC- 04 Collector	35.5	224G	273G	(P) / F / NA

Step 2 - Maximum Voltage Withstand Test

Items	Circuit No. or Details of Equipment	Test Voltage (kV DC)	Duration (Min)	Measured Voltage
1	H VB-APS 1 -HVC- 01 Ionizer	20	1	20.2 kV
2	H VB-APS 1 -HVC- 02 Ionizer	20	1	20.2 kV
3	H VB-APS 1 -HVC- 03 Ionizer	20	1	20.2 kV
4	H VB-APS 1 -HVC- 04 Collector	20	1	20.2 kV

E) List of Testing Equipment / Instruments

Type	Model	Serial No	Calibration Cert. No	Date of Cert.
HV Insulation Tester	AR3125	6819355	KSZ250212780001	26/02/2025
HV DC Voltage Meter	HVP-40DM	20240071	ACZ2202505030801	03/03/2025

Remark: P / F / NA = Pass / Fail / Not Applicable,
The passing criteria for the test is passing the insulation test after for maximum voltage withstand test.
The insulation resistance is over 1000MOhm (*) for HV DC Cable and 30MOhm for ESP Cell

Comment:

	Name:	Signature:	Date:
Test / Checked By : REW No.: W133589 Grade B+1 (Name of CTA Representative)	HO TUNG		14/08/2025
Witnessed By : (Name of JEC Representative)	John Chan		14/08/2025
Witnessed By : (Name of GCL)	Raymond Lau		14/08/2025
Witnessed By : (Name of AM MJV)	Andy Tang		14/08/2025
Witnessed By : (Name of)			
Witnessed By : (Name of)			

Gammon

CTA INTERNATIONAL AS CLEAN TUNNEL AIR

Air Purification System – HV Power Supply Units Test & Commissioning Report			
Contract No.:	HY/2019/13	RISC No.:	~~36855A~~ ~~(36849A)~~ 36851A
Project:	Central Kowloon Route - Buildings, Electrical and Mechanical	Date:	14/08/2025
Location:	~~YVB~~ / HVB / ~~KVB~~	Room Name:	
T&C Plan Ref. No:	J3883-APS-S-I-17	Page:	
Ref. Dwg. No.:	J3883/MEP/APS/HVB/1603&1604&1605		

Part 2: Installation Inspection and Cable Tests for HV DC Cables (Sheet 1 of 2)

A) Visual Inspection (TCP Section 4.4.1)

Items	Description of Inspection	Test Result
a)	No visible damage to impair safety	(P) / F / NA
b)	Ensure all cables, HV connectors, cable glands & accessories are in good condition	(P) / F / NA
c)	All conductors are correctly and securely connected and identified, protected against mechanical damage, and adequately supported	(P) / F / NA

B) HV DC Cable Continuity Tests (TCP Section 4.4.2)

From: ESP HV Switch Room (01) / 02 To: APS Plenum No (01) / 02 / 03 Sub-assembly A / (B) / C / D / E

Items	Circuit No. or Details of Equipment	Cable Length (m)	Continuity Resistance (Ω) Measured	Calculated	Passing Criteria	Test Result
1	H VB-APS 1 -HVC- 05 Ionizer	34.5	0.72	0.36	0.845	(P) / F / NA
2	H VB-APS 1 -HVC- 06 Ionizer	34.5		0.36	0.845	(P) / F / NA
3	H VB-APS 1 -HVC- 07 Ionizer	33.5	0.70	0.35	0.821	(P) / F / NA
4	H VB-APS 1 -HVC- 08 Collector	33.5		0.35	0.821	(P) / F / NA

C) List of Testing Equipment / Instruments

Type	Model	Serial No	Calibration Cert. No	Date of Cert.
Digital Micro Ohmmeter	VT620C+	C242921984	ACZ202502220127	22/02/2025
Cable Fault Tester	LCT268-2(KM)	250219005	ACZ202503030802	22/02/2025

Remark: P / F / NA = Pass / Fail / Not Applicable
Insulation Resistance should be >1000MΩ, Continuity Resistance shall be < 0.0245Ω/m (B)

Comment: Calculation Formula = (Cable Length x Measured Resistance) / Total Cable Length
Passing Criteria = 0.0245*Cable Length

Test / Checked By : REW No.: W133567 Grade B+H (Name of CTA Representative)	Name: HO TUNG	Signature:	Date: 14/08/2025
Witnessed By : (Name of JEC Representative)	Name: John Chan	Signature:	Date: 14/08/2025
Witnessed By : (Name of GCL)	Name: Raymond Lau	Signature:	Date: 14/08/2025
Witnessed By : (Name of AMMJV)	Name: Andy Tang	Signature:	Date: 14/08/2025
Witnessed By : (Name of)	Name:	Signature:	Date:
Witnessed By : (Name of)	Name:	Signature:	Date:

Gammon

CTA INTERNATIONAL AS CLEAN TUNNEL AIR

Air Purification System – HV Power Supply Units Test & Commissioning Report			
Contract No.:	HY/2019/13	RISC No.:	~~36835A~~ ~~36849A~~ 36851A
Project:	Central Kowloon Route - Buildings, Electrical and Mechanical	Date:	14/08/2025
Location:	~~HVB~~ / HVB / ~~KVB~~	Room Name:	
T&C Plan Ref. No:	J3883-APS-S-I-17	Page:	
Ref. Dwg. No.:	J3883/MEP/APS/HVB/1603&1604&1605		

Part 2: Installation Inspection and Cable Tests for HV DC Cables (2 of 2)

D) Maximum Voltage Withstand Test for HV DC Cable (TCP Section 4.4.3)

Step 1 & 3 - Insulation Resistance Test before and after the Maximum Voltage Withstand Test

From:	ESP HV Switch Room (01) / 02	To:	APS Plenum No. (01) / 02 / 03 Sub-assembly A / (B) / C / D / E

Items	Circuit No. or Details of Equipment	Cable Length (m)	Insulation Resistance (MΩ) before Step 2	Insulation Resistance (MΩ) after Step 2	Test Result
1	H VB-APS 1 -HVC- 05 Ionizer	34.5	273G	235G	(P) / F / NA
2	H VB-APS 1 -HVC- 06 Ionizer	34.5	245G	254G	(P) / F / NA
3	H VB-APS 1 -HVC- 07 Ionizer	33.5	254G	265G	(P) / F / NA
4	H VB-APS 1 -HVC- 08 Collector	33.5	224G	235G	(P) / F / NA

Step 2 - Maximum Voltage Withstand Test

Items	Circuit No. or Details of Equipment	Test Voltage (kV DC)	Duration (Min)	Measured Voltage
1	H VB-APS 1 -HVC- 01 Ionizer	20	1	20.2 kV
2	H VB-APS 1 -HVC- 02 Ionizer	20	1	20.2 kV
3	H VB-APS 1 -HVC- 03 Ionizer	20	1	20.2 kV
4	H VB-APS 1 -HVC- 04 Collector	20	1	20.2 kV

E) List of Testing Equipment / Instruments

Type	Model	Serial No	Calibration Cert. No	Date of Cert.
HV Insulation Tester	AR3125	6819355	KSZ250212780001	26/02/2025
HV DC Voltage Meter	HVP-40DM	20240071	ACZ2202505030801	03/03/2025

Remark: P / F / NA = Pass / Fail / Not Applicable,
The passing criteria for the test is passing the insulation test after for maximum voltage withstand test.
The insulation resistance is over 1000MOhm (*) for HV DC Cable and 30MOhm for ESP Cell

Comment:

Test / Checked By : REW No.: W133567 Grade H+B (Name of CTA Representative)	Name: HO TUNG	Signature:	Date: 14/08/2025
Witnessed By : (Name of JEC Representative)	Name: John Chan	Signature:	Date: 14/08/2025
Witnessed By : (Name of GCL)	Name: Raymond Lau	Signature:	Date: 14/08/2025
Witnessed By : (Name of AMMJV)	Name: Andy Tang	Signature:	Date: 14/08/2025
Witnessed By : (Name of)	Name:	Signature:	Date:
Witnessed By : (Name of)	Name:	Signature:	Date:

Gammon

CTA INTERNATIONAL AS CLEAN TUNNEL AIR

Air Purification System – HV Power Supply Units Test & Commissioning Report			
Contract No.:	HY/2019/13	RISC No.:	~~36855A~~ ~~36849A~~ 36851A
Project:	Central Kowloon Route - Buildings, Electrical and Mechanical	Date:	14/08/2025
Location:	~~IVB~~ / HVB / ~~KVB~~	Room Name:	
T&C Plan Ref. No:	J3883-APS-S-I-17	Page:	
Ref. Dwg. No.:	J3883/MEP/APS/HVB/1603&1604&1605		

Part 2: Installation Inspection and Cable Tests for HV DC Cables (Sheet 1 of 2)

A) Visual Inspection (TCP Section 4.4.1)

Items	Description of Inspection	Test Result
a)	No visible damage to impair safety	(P) / F / NA
b)	Ensure all cables, HV connectors, cable glands & accessories are in good condition	(P) / F / NA
c)	All conductors are correctly and securely connected and identified, protected against mechanical damage, and adequately supported	(P) / F / NA

B) HV DC Cable Continuity Tests (TCP Section 4.4.2)

From: ESP HV Switch Room (01) / 02 To: APS Plenum No. (01) / 02 / 03 Sub-assembly A / B / (C) / D / E

Items	Circuit No. or Details of Equipment	Cable Length (m)	Continuity Resistance (Ω)			Test Result
			Measured	Calculated	Passing Criteria	
1	H VB-APS 1 -HVC- 09 Ionizer	32.5	0.68	0.34	0.796	(P) / F / NA
2	H VB-APS 1 -HVC- 10 Ionizer	32.5		0.34	0.796	(P) / F / NA
3	H VB-APS 1 -HVC- 11 Ionizer	31.5	0.66	0.33	0.772	(P) / F / NA
4	H VB-APS 1 -HVC- 12 Collector	31.5		0.33	0.772	(P) / F / NA

C) List of Testing Equipment / Instruments

Type	Model	Serial No	Calibration Cert. No	Date of Cert.
Digital Micro Ohmmeter	VT620C+	C242921984	ACZ202502220127	22/02/2025
Cable Fault Tester	LCT268-2(KM)	250219005	ACZ202503030802	22/02/2025

Remark: P / F / NA = Pass / Fail / Not Applicable
Insulation Resistance should be >1000MΩ, Continuity Resistance shall be < 0.0245Ω/m (B)

Comment: Calculation Formula = (Cable Length x Measured Resistance) / Total Cable Length
Passing Criteria = 0.0245*Cable Length

Test / Checked By : REW No.: W133567 Grade B+T1 (Name of CTA Representative)	Name: HO TUNG	Signature:	Date: 14/08/2025
Witnessed By : (Name of JEC Representative)	Name: John Chan	Signature:	Date: 14/08/2025
Witnessed By : (Name of GCL)	Name: Raymond Lau	Signature:	Date: 14/08/2025
Witnessed By : (Name of AMMJV)	Name: Andy Tang	Signature:	Date: 14/08/2025
Witnessed By : (Name of)	Name:	Signature:	Date:
Witnessed By : (Name of)	Name:	Signature:	Date:

Gammon

CTA INTERNATIONAL AS CLEAN TUNNEL AIR

Air Purification System – HV Power Supply Units Test & Commissioning Report			
Contract No.:	HY/2019/13	RISC No.:	~~36855 A~~ ~~36844A~~ 36851A
Project:	Central Kowloon Route - Buildings, Electrical and Mechanical	Date:	14/08/2025
Location:	~~YVB~~ / HVB / ~~KVB~~	Room Name:	
T&C Plan Ref. No:	J3883-APS-S-I-17	Page:	
Ref. Dwg. No.:	J3883/MEP/APS/HVB/1603&1604&1605		

Part 2: Installation Inspection and Cable Tests for HV DC Cables (2 of 2)

D) Maximum Voltage Withstand Test for HV DC Cable (TCP Section 4.4.3)

Step 1 & 3 - Insulation Resistance Test before and after the Maximum Voltage Withstand Test

From:	ESP HV Switch Room (01) / 02	To:	APS Plenum No. (01) / 02 / 03 Sub-assembly A / B / (C) / D / E

Items	Circuit No. or Details of Equipment	Cable Length (m)	Insulation Resistance (MΩ) before Step 2	Insulation Resistance (MΩ) after Step 2	Test Result
1	H VB-APS 1 -HVC- 09 Ionizer	32.5	220G	235G	(P) / F / NA
2	H VB-APS 1 -HVC- 10 Ionizer	32.5	235G	245G	(P) / F / NA
3	H VB-APS 1 -HVC- 11 Ionizer	31.5	225G	246G	(P) / F / NA
4	H VB-APS 1 -HVC- 12 Collector	31.5	235G	264G	(P) / F / NA

Step 2 - Maximum Voltage Withstand Test

Items	Circuit No. or Details of Equipment	Test Voltage (kV DC)	Duration (Min)	Measured Voltage
1	H VB-APS 1 -HVC- 09 Ionizer	20	1	20.2 kV
2	H VB-APS 1 -HVC- 10 Ionizer	20	1	20.2 kV
3	H VB-APS 1 -HVC- 11 Ionizer	20	1	20.2 kV
4	H VB-APS 1 -HVC- 12 Collector	20	1	20.2 kV

E) List of Testing Equipment / Instruments

Type	Model	Serial No	Calibration Cert. No	Date of Cert.
HV Insulation Tester	AR3125	6819355	KSZ250212780001	26/02/2025
HV DC Voltage Meter	HVP-40DM	20240071	ACZ2202505030801	03/03/2025

Remark: P / F / NA = Pass / Fail / Not Applicable,
The passing criteria for the test is passing the insulation test after for maximum voltage withstand test.
The insulation resistance is over 1000MOhm (*) for HV DC Cable and 30MOhm for ESP Cell

Comment:

Test / Checked By : REW No.: W133567 Grade B+H (Name of CTA Representative)	Name: HO TUNG	Signature:	Date: 14/08/2025
Witnessed By : (Name of JEC Representative)	Name: John Chan	Signature:	Date: 14/08/2025
Witnessed By : (Name of GCL)	Name: Raymond Lau	Signature:	Date: 14/08/2025
Witnessed By : (Name of AMATV)	Name: Andy Tang	Signature:	Date: 14/08/2025
Witnessed By : (Name of)	Name:	Signature:	Date:
Witnessed By : (Name of)	Name:	Signature:	Date:

Gammon

CTA INTERNATIONAL AS CLEAN TUNNEL AIR

Air Purification System – HV Power Supply Units Test & Commissioning Report			
Contract No.:	HY/2019/13	RISC No.:	~~36835A~~ 36849A (~~[illegible]~~) 36851A (~~[illegible]~~)
Project:	Central Kowloon Route - Buildings, Electrical and Mechanical	Date:	14/08/2025
Location:	~~YVB~~ / HVB / ~~KVB~~	Room Name:	
T&C Plan Ref. No:	J3883-APS-S-I-17	Page:	
Ref. Dwg. No.:	J3883/MEP/APS/HVB/1603&1604&1605		

Part 2: Installation Inspection and Cable Tests for HV DC Cables (Sheet 1 of 2)

A) Visual Inspection (TCP Section 4.4.1)

Items	Description of Inspection	Test Result
a)	No visible damage to impair safety	(P) / F / NA
b)	Ensure all cables, HV connectors, cable glands & accessories are in good condition	(P) / F / NA
c)	All conductors are correctly and securely connected and identified, protected against mechanical damage, and adequately supported	(P) / F / NA

B) HV DC Cable Continuity Tests (TCP Section 4.4.2)

From: ESP HV Switch Room (01) / 02 To: APS Plenum No. (01) / 02 / 03 Sub-assembly A / B / C / (D) / E

Items	Circuit No. or Details of Equipment	Cable Length (m)	Continuity Resistance (Ω) Measured	Calculated	Passing Criteria	Test Result
1	H VB-APS 1 -HVC- 13 Ionizer	30.5	0.64	0.32	0.747	(P) / F / NA
2	H VB-APS 1 -HVC- 14 Ionizer	30.5		0.32	0.747	(P) / F / NA
3	H VB-APS 1 -HVC- 15 Ionizer	29.5	0.62	0.31	0.723	(P) / F / NA
4	H VB-APS 1 -HVC- 16 Collector	29.5		0.31	0.723	(P) / F / NA

C) List of Testing Equipment / Instruments

Type	Model	Serial No	Calibration Cert. No	Date of Cert.
Digital Micro Ohmmeter	VT620C+	C242921984	ACZ202502220127	22/02/2025
Cable Fault Tester	LCT268-2(KM)	250219005	ACZ202503030802	22/02/2025

Remark: P / F / NA = Pass / Fail / Not Applicable
Insulation Resistance should be >1000MΩ, Continuity Resistance shall be < 0.0245Ω/m (B)

Comment: Calculation Formula = (Cable Length x Measured Resistance) / Total Cable Length
Passing Criteria = 0.0245*Cable Length

Test / Checked By : REW No.: W133569 Grade B+H (Name of CTA Representative)	Name: HO TUNG	Signature:	Date: 14/08/2025
Witnessed By : (Name of JEC Representative)	Name: John Chan	Signature:	Date: 14/08/2025
Witnessed By : (Name of GCL)	Name: Raymond Lau	Signature:	Date: 14/08/2025
Witnessed By : (Name of AMMJV)	Name: Andy Tang	Signature:	Date: 14/08/2025
Witnessed By : (Name of)	Name:	Signature:	Date:
Witnessed By : (Name of)	Name:	Signature:	Date:

Gammon

CTA INTERNATIONAL AS CLEAN TUNNEL AIR

Air Purification System – HV Power Supply Units Test & Commissioning Report			
Contract No.:	HY/2019/13	RISC No.:	~~36855A~~ ~~36840A~~ 36851A
Project:	Central Kowloon Route - Buildings, Electrical and Mechanical	Date:	14/08/2025
Location:	~~HVB~~ / HVB / ~~KVB~~	Room Name:	
T&C Plan Ref. No:	J3883-APS-S-I-17	Page:	
Ref. Dwg. No.:	J3883/MEP/APS/HVB/1603&1604&1605		

Part 2: Installation Inspection and Cable Tests for HV DC Cables (2 of 2)

D) Maximum Voltage Withstand Test for HV DC Cable (TCP Section 4.4.3)

Step 1 & 3 - Insulation Resistance Test before and after the Maximum Voltage Withstand Test

From:	ESP HV Switch Room (01) / 02	To:	APS Plenum No. (01) / 02 / 03 Sub-assembly A / B / C / (D) / E

Items	Circuit No. or Details of Equipment	Cable Length (m)	Insulation Resistance (MΩ) before Step 2	Insulation Resistance (MΩ) after Step 2	Test Result
1	H VB-APS 1 -HVC- 13 Ionizer	30.5	225G	246G	(P) / F / NA
2	H VB-APS 1 -HVC- 14 Ionizer	30.5	235G	257G	(P) / F / NA
3	H VB-APS 1 -HVC- 15 Ionizer	29.5	235G	267G	(P) / F / NA
4	H VB-APS 1 -HVC- 16 Collector	29.5	233G	246G	(P) / F / NA

Step 2 - Maximum Voltage Withstand Test

Items	Circuit No. or Details of Equipment	Test Voltage (kV DC)	Duration (Min)	Measured Voltage
1	H VB-APS 1 -HVC- 13 Ionizer	20	1	20.2 kV
2	H VB-APS 1 -HVC- 14 Ionizer	20	1	20.2 kV
3	H VB-APS 1 -HVC- 15 Ionizer	20	1	20.2 kV
4	H VB-APS 1 -HVC- 16 Collector	20	1	20.2 kV

E) List of Testing Equipment / Instruments

Type	Model	Serial No	Calibration Cert. No	Date of Cert.
HV Insulation Tester	AR3125	6819355	KSZ250212780001	26/02/2025
HV DC Voltage Meter	HVP-40DM	20240071	ACZ2202505030801	03/03/2025

Remark: P / F / NA = Pass / Fail / Not Applicable,
The passing criteria for the test is passing the insulation test after for maximum voltage withstand test.
The insulation resistance is over 1000MOhm (*) for HV DC Cable and 30MOhm for ESP Cell

Comment:

	Name:	Signature:	Date:
Test / Checked By : REW No.: W133507 Grade H+B (Name of CTA Representative)	HO TUNG		14/08/2025
Witnessed By : (Name of JEC Representative)	John Chan		14/08/2025
Witnessed By : (Name of GCL)	Raymond Lau		14/08/2025
Witnessed By : (Name of AMMJV)	Andy Tang		14/08/2025
Witnessed By : (Name of)			
Witnessed By : (Name of)			

Gammon

CTA INTERNATIONAL AS

Air Purification System – HV Power Supply Units Test & Commissioning Report			
Contract No.:	HY/2019/13	RISC No.:	~~36855A~~ ~~36849A~~ 36851A
Project:	Central Kowloon Route - Buildings, Electrical and Mechanical	Date:	14/08/2025
Location:	~~HVB~~ / HVB / ~~KVB~~	Room Name:	
T&C Plan Ref. No:	J3883-APS-S-I-17	Page:	
Ref. Dwg. No.:	J3883/MEP/APS/HVB/1603&1604&1605		

Part 2: Installation Inspection and Cable Tests for HV DC Cables (Sheet 1 of 2)

A) Visual Inspection (TCP Section 4.4.1)

Items	Description of Inspection	Test Result
a)	No visible damage to impair safety	(P) / F / NA
b)	Ensure all cables, HV connectors, cable glands & accessories are in good condition	(P) / F / NA
c)	All conductors are correctly and securely connected and identified, protected against mechanical damage, and adequately supported	(P) / F / NA

B) HV DC Cable Continuity Tests (TCP Section 4.4.2)

From: ESP HV Switch Room (01) / 02 To: APS Plenum No. (01) / 02 / 03 Sub-assembly A / B / C / D / (E)

Items	Circuit No. or Details of Equipment	Cable Length (m)	Continuity Resistance (Ω) Measured	Calculated	Passing Criteria	Test Result
1	H VB-APS 1 -HVC- 17 Ionizer	28.5	0.60	0.30	0.698	(P) / F / NA
2	H VB-APS 1 -HVC- 18 Ionizer	28.5		0.30	0.698	(P) / F / NA
3	H VB-APS 1 -HVC- 19 Ionizer	27.5	0.58	0.29	0.674	(P) / F / NA
4	H VB-APS 1 -HVC- 20 Collector	27.5		0.29	0.674	(P) / F / NA

C) List of Testing Equipment / Instruments

Type	Model	Serial No	Calibration Cert. No	Date of Cert.
Digital Micro Ohmmeter	VT620C+	C242921984	ACZ202502220127	22/02/2025
Cable Fault Tester	LCT268-2(KM)	250219005	ACZ202503030802	22/02/2025

Remark: P / F / NA = Pass / Fail / Not Applicable
Insulation Resistance should be >1000MΩ, Continuity Resistance shall be < 0.0245Ω/m (B)

Comment: Calculation Formula = (Cable Length x Measured Resistance) / Total Cable Length
Passing Criteria = 0.0245*Cable Length

Test / Checked By : REW No.: W135507 Grade Btrl (Name of CTA Representative)	Name: HO TUNG	Signature:	Date: 14/08/2025
Witnessed By : (Name of JEC Representative)	Name: John Chan	Signature:	Date: 14/08/2025
Witnessed By : (Name of GCL)	Name: Raymond Lau	Signature:	Date: 14/08/2025
Witnessed By : (Name of AMMJV)	Name: Andy Tang	Signature:	Date: 14/08/2025
Witnessed By : (Name of)	Name:	Signature:	Date:
Witnessed By : (Name of)	Name:	Signature:	Date:

Gammon

CTA INTERNATIONAL AS CLEAN TUNNEL AIR

Air Purification System – HV Power Supply Units Test & Commissioning Report			
Contract No.:	HY/2019/13	RISC No.:	~~36855 A~~ ~~36849A~~ 36851 A
Project:	Central Kowloon Route - Buildings, Electrical and Mechanical	Date:	14/08/2025
Location:	~~YVB~~ / HVB / ~~KVB~~	Room Name:	
T&C Plan Ref. No:	J3883-APS-S-I-17	Page:	
Ref. Dwg. No.:	J3883/MEP/APS/HVB/1603&1604&1605		

Part 2: Installation Inspection and Cable Tests for HV DC Cables (2 of 2)

D) Maximum Voltage Withstand Test for HV DC Cable (TCP Section 4.4.3)

Step 1 & 3 - Insulation Resistance Test before and after the Maximum Voltage Withstand Test

From:	ESP HV Switch Room 01 / 02	To:	APS Plenum No. 01 / 02 / 03 Sub-assembly A / B / C / D / E

Items	Circuit No. or Details of Equipment	Cable Length (m)	Insulation Resistance (MΩ) before Step 2	Insulation Resistance (MΩ) after Step 2	Test Result
1	H VB-APS 1 -HVC- 17 Ionizer	28.5	224G	236G	P / F / NA
2	H VB-APS 1 -HVC- 18 Ionizer	28.5	235G	254G	P / F / NA
3	H VB-APS 1 -HVC- 19 Ionizer	27.5	243G	225G	P / F / NA
4	H VB-APS 1 -HVC- 20 Collector	27.5	274G	246G	P / F / NA

Step 2 - Maximum Voltage Withstand Test

Items	Circuit No. or Details of Equipment	Test Voltage (kV DC)	Duration (Min)	Measured Voltage
1	H VB-APS 1 -HVC- 17 Ionizer	20	1	20.2 kV
2	H VB-APS 1 -HVC- 18 Ionizer	20	1	20.2 kV
3	H VB-APS 1 -HVC- 19 Ionizer	20	1	20.2 kV
4	H VB-APS 1 -HVC- 20 Collector	20	1	20.2 kV

E) List of Testing Equipment / Instruments

Type	Model	Serial No	Calibration Cert. No	Date of Cert.
HV Insulation Tester	AR3125	6819355	KSZ250212780001	26/02/2025
HV DC Voltage Meter	HVP-40DM	20240071	ACZ2202505030801	03/03/2025

Remark: P / F / NA = Pass / Fail / Not Applicable,
The passing criteria for the test is passing the insulation test after for maximum voltage withstand test.
The insulation resistance is over 1000MOhm (*) for HV DC Cable and 30MOhm for ESP Cell

Comment:

Test / Checked By : REW No.: WB3567 Grade 3+1 (Name of CTA Representative)	Name: HO TUNG	Signature:	Date: 14/08/2025
Witnessed By : (Name of JEC Representative)	Name: John Chan	Signature:	Date: 14/08/2025
Witnessed By : (Name of GCL)	Name: Raymond Lau	Signature:	Date: 14/08/2025
Witnessed By : (Name of AnMJV)	Name: Andy Tang	Signature:	Date: 14/08/2025
Witnessed By : (Name of)	Name:	Signature:	Date:
Witnessed By : (Name of)	Name:	Signature:	Date:

Gammon

CTA INTERNATIONAL AS CLEAN TUNNEL AIR

Air Purification System – HV Power Supply Units Test & Commissioning Report			
Contract No.:	HY/2019/13	RISC No.:	36858A
Project:	Central Kowloon Route - Buildings, Electrical and Mechanical	Date:	14/8/2025
Location:	YVB / HVB / KVB	Room Name:	HV Switch Room 1
T&C Plan Ref. No:	J3883-APS-S-I-17	Page:	
Ref. Dwg. No.:	J3883-MEP/APS/HVB/1603&1604&1605		

Part 3: Inspection and Test for Electrical Installations			
Testing Equipment / Instrument 01:			
Type:	Insulation-Continuity	Serial No. of Instrument:	E8430370
Model:	3005A	Calibration Certificate No.:	C5C248876
Date of Calibration:	19/11/2024		
Testing Equipment / Instrument 02:			
Type:		Serial No. of Instrument:	
Model:		Calibration Certificate No.:	
Date of Calibration:			
Testing Equipment / Instrument 03:			
Type:		Serial No. of Instrument:	
Model:		Calibration Certificate No.:	
Date of Calibration:			
Testing Equipment / Instrument 04:			
Type:		Serial No. of Instrument:	
Model:		Calibration Certificate No.:	
Date of Calibration:			
Testing Equipment / Instrument 05:			
Type:		Serial No. of Instrument:	
Model:		Calibration Certificate No.:	
Date of Calibration:			

Test / Checked By : REW No.: W133567 Grade B+H (Name of CTA Representative)	Name: Ho Tung	Signature: Ho Tung	Date: 14/8/25
Witnessed By : (Name of JEC Representative)	Name: John Chan	Signature:	Date: 14/8/25
Witnessed By : (Name of GCL)	Name: Boris Yan	Signature:	Date: 14/8/25
Witnessed By : (Name of AMMTV)	Name: Andy Tang	Signature: Andy Tang	Date: 14/8/25
Witnessed By : (Name of)	Name:	Signature:	Date:
Witnessed By : (Name of)	Name:	Signature:	Date:

Gammon

CTA INTERNATIONAL AS

Air Purification System – HV Power Supply Units Test & Commissioning Report			
Contract No.:	HY/2019/13	RISC No.:	36858 A
Project:	Central Kowloon Route - Buildings, Electrical and Mechanical	Date:	14/08/2025
Location:	~~KVB~~ / HVB / ~~KVB~~	Room Name:	
T&C Plan Ref. No:	J3883-APS-S-I-17	Page:	
Ref. Dwg. No.:	J3883/MEP/APS/HVB/1603&1604&1605		

Part 3: Inspection and Test for Electrical Installations (Sheet 1 of 5)

A) Continuity Test of ESP DC Earthing Conductor and 0V conductor (TCP Section 4.5.3)

Location: ESP HV Switch Room (01) / 02

Circuit No. or Details of Equipment	Continuity of Conductor (ohm)	Test Result
APS1-PSC-01 Main Earthing	0.1	(P) / F / NA
APS1-PSC-01 0V Earthing	0.1	(P) / F / NA
APS1-PSC-02 Main Earthing	0.1	(P) / F / NA
APS1-PSC-02 0V Earthing	0.1	(P) / F / NA
		P / F / NA
		P / F / NA
		P / F / NA
		P / F / NA
		P / F / NA
		P / F / NA
		P / F / NA

Remark: P / F / NA = Pass / Fail / Not Applicable
The Passing Criteria for Reading of Continuity test should be <1Ω

Comment:

Test / Checked By : REW No.: W133587 Grade BTH (Name of CTA Representative)	Name: HO TUNG	Signature:	Date: 14/08/2025
Witnessed By : (Name of JEC Representative)	Name: John Chan	Signature:	Date: 14/08/2025
Witnessed By : (Name of GCL)	Name: Boris Yan	Signature:	Date: 14/08/2025
Witnessed By : (Name of AMMSV)	Name: Andy Tang	Signature:	Date: 14/08/2025
Witnessed By : (Name of)	Name:	Signature:	Date:
Witnessed By : (Name of)	Name:	Signature:	Date:

Gammon

CTA INTERNATIONAL AS CLEAN TUNNEL AIR

Air Purification System – HV Power Supply Units Test & Commissioning Report			
Contract No.:	HY/2019/13	RISC No.:	36858
Project:	Central Kowloon Route - Buildings, Electrical and Mechanical	Date:	14/08/2025
Location:	~~YVB~~ / HVB / ~~KVB~~	Room Name:	
T&C Plan Ref. No:	J3883-APS-S-I-17	Page:	
Ref. Dwg. No.:	J3883/MEP/APS/HVB/1603&1604&1605		

Part 3: Inspection and Test for Electrical Installations (Sheet 2A of 5)

B) Earth Loop Impedance Test (TCP Section 4.5.3)

ESP HV Power Supply Cabinets Information

Cabinets ID:	H VB-APS 1 -ESP-PSC-0 1	Main Switch Rating:	80A
Location:	ESP HV Switch Room (01) / 02	Supply Fed From:	HVB-DB-ESP01-1

Circuit No	Details of Equipment	Type of Protective Device	Rating	Earth Loop Impedance (Zs) (Ω)	Test Result
1	H VB-APS 1 -PSU- 01 A Subassembly Ionizer 1	RCBO	16A SP	0.12	(P) / F / NA
2	H VB-APS 1 -PSU- 02 A Subassembly Ionizer 2	RCBO	16A SP	0.12	(P) / F / NA
3	H VB-APS 1 -PSU- 03 A Subassembly Ionizer 3	RCBO	16A SP	0.13	(P) / F / NA
4	H VB-APS 1 -PSU- 04 A Subassembly Collector	RCBO	16A SP	0.12	(P) / F / NA
5	H VB-APS 1 -PSU- 05 B Subassembly Ionizer 1	RCBO	16A SP	0.14	(P) / F / NA
6	H VB-APS 1 -PSU- 06 B Subassembly Ionizer 2	RCBO	16A SP	0.12	(P) / F / NA
7	H VB-APS 1 -PSU- 07 B Subassembly Ionizer 3	RCBO	16A SP	0.13	(P) / F / NA
8	H VB-APS 1 -PSU- 08 B Subassembly Collector	RCBO	16A SP	0.14	(P) / F / NA
9	H VB-APS 1 -PSU- 09 C Subassembly Ionizer 1	RCBO	16A SP	0.13	(P) / F / NA
10	H VB-APS 1 -PSU- 10 C Subassembly Ionizer 2	RCBO	16A SP	0.12	(P) / F / NA

Remark: P / F / NA = Pass / Fail / Not Applicable
The Passing Criteria for the Max Earth Fault Loop Independence shall refer to EMSD COP.

Comment:

Test / Checked By : REW No.: W133567 Grade B+H (Name of CTA Representative)	Name: HO TUNG	Signature: Ho Tung	Date: 14/08/2025
Witnessed By : (Name of JEC Representative)	Name: John Chan	Signature:	Date: 14/08/2025
Witnessed By : (Name of GCL)	Name: Boris Yan	Signature:	Date: 14/08/2025
Witnessed By : (Name of AMMSV)	Name: Andy Tang	Signature: Andy Tang	Date: 14/08/2025
Witnessed By : (Name of)	Name:	Signature:	Date:
Witnessed By : (Name of)	Name:	Signature:	Date:

Gammon

CTA INTERNATIONAL AS CLEAN TUNNEL AIR

Air Purification System – HV Power Supply Units Test & Commissioning Report			
Contract No.:	HY/2019/13	RISC No.:	36858 A
Project:	Central Kowloon Route - Buildings, Electrical and Mechanical	Date:	14/08/2025
Location:	~~YVB~~ / HVB / ~~KVB~~	Room Name:	
T&C Plan Ref. No:	J3883-APS-S-I-17	Page:	
Ref. Dwg. No.:	J3883/MEP/APS/HVB/1603&1604&1605		

Part 3: Inspection and Test for Electrical Installations (Sheet 2A of 5)

B) Earth Loop Impedance Test (TCP Section 4.5.3)

ESP HV Power Supply Cabinets Information

Cabinets ID:	H VB-APS 1 -ESP-PSC-0 2	Main Switch Rating:	80A
Location:	ESP HV Switch Room (01) / 02	Supply Fed From:	HVB-DB-ESP01-2

Circuit No	Details of Equipment	Type of Protective Device	Rating	Earth Loop Impedance (Zs) (Ω)	Test Result
1	H VB-APS 1 -PSU- 11 C Subassembly Ionizer 3	RCBO	16A SP	0.12	(P) / F / NA
2	H VB-APS 1 -PSU- 12 C Subassembly Collector	RCBO	16A SP	0.13	(P) / F / NA
3	H VB-APS 1 -PSU- 13 D Subassembly Ionizer 1	RCBO	16A SP	0.13	(P) / F / NA
4	H VB-APS 1 -PSU- 14 D Subassembly Ionizer 2	RCBO	16A SP	0.13	(P) / F / NA
5	H VB-APS 1 -PSU- 15 D Subassembly Ionizer 3	RCBO	16A SP	0.14	(P) / F / NA
6	H VB-APS 1 -PSU- 16 D Subassembly Collector	RCBO	16A SP	0.13	(P) / F / NA
7	H VB-APS 1 -PSU- 17 E Subassembly Ionizer 1	RCBO	16A SP	0.13	(P) / F / NA
8	H VB-APS 1 -PSU- 18 E Subassembly Ionizer 2	RCBO	16A SP	0.14	(P) / F / NA
9	H VB-APS 1 -PSU- 19 E Subassembly Ionizer 3	RCBO	16A SP	0.13	(P) / F / NA
10	H VB-APS 1 -PSU- 20 E Subassembly Collector	RCBO	16A SP	0.12	(P) / F / NA

Remark: P / F / NA = Pass / Fail / Not Applicable
The Passing Criteria for the Max Earth Fault Loop Independence shall refer to EMSD COP.

Comment:

Test / Checked By : REW No.: W133587 Grade B+1 (Name of CTA Representative)	Name: HO TUNG	Signature: Ho Tung	Date: 14/08/2025
Witnessed By : (Name of JEC Representative)	Name: John Chan	Signature:	Date: 14/08/2025
Witnessed By : (Name of GCL)	Name: Boris Yan	Signature:	Date: 14/08/2025
Witnessed By : (Name of AMMJV)	Name: Andy Tang	Signature: Andy Tang	Date: 14/08/2025
Witnessed By : (Name of)	Name:	Signature:	Date:
Witnessed By : (Name of)	Name:	Signature:	Date:

Gammon

CTA INTERNATIONAL AS CLEAN TUNNEL AIR

Air Purification System – HV Power Supply Units Test & Commissioning Report			
Contract No.:	HY/2019/13	RISC No.:	36858 A
Project:	Central Kowloon Route - Buildings, Electrical and Mechanical	Date:	14/08/2025
Location:	~~YVB~~ / HVB / ~~KVB~~	Room Name:	
T&C Plan Ref. No:	J3883-APS-S-I-17	Page:	
Ref. Dwg. No.:	J3883/MEP/APS/HVB/1603&1604&1605		

Part 3: Inspection and Test for Electrical Installations (Sheet 3 of 5)

C) Functional Test of Residual Current Device (RCD) (TCP Section 4.5.3)

ESP HV Power Supply Cabinets Information

Cabinets ID:	H VB-APS 1 -ESP-PSC-0 1	Main Switch Rating:	80A
Location:	ESP HV Switch Room (01) / 02	Supply Fed From:	HVB-DB-ESP01-1

Circuit No. or Details of Equipment	Type of Protective Device	Rating	Polarity	RCD 50% (ms)	RCD 100% (ms)	Test Result
1	RCBO	16A SP	(P) / F / NA	(P) / F / NA	37.1	(P) / F / NA
2	RCBO	16A SP	(P) / F / NA	(P) / F / NA	37.3	(P) / F / NA
3	RCBO	16A SP	(P) / F / NA	(P) / F / NA	33.1	(P) / F / NA
4	RCBO	16A SP	(P) / F / NA	(P) / F / NA	33.3	(P) / F / NA
5	RCBO	16A SP	(P) / F / NA	(P) / F / NA	27.1	(P) / F / NA
6	RCBO	16A SP	(P) / F / NA	(P) / F / NA	37.1	(P) / F / NA
7	RCBO	16A SP	(P) / F / NA	(P) / F / NA	27.1	(P) / F / NA
8	RCBO	16A SP	(P) / F / NA	(P) / F / NA	33.1	(P) / F / NA
9	RCBO	16A SP	(P) / F / NA	(P) / F / NA	27.1	(P) / F / NA
10	RCBO	16A SP	(P) / F / NA	(P) / F / NA	32.1	(P) / F / NA

Remark: P / F / NA = Pass / Fail / Not Applicable
Tripping time of RCD for 30mA leakage current shall be within 300ms.

Comment:

Test / Checked By : REW No.: W133587 Grade B+/1 (Name of CTA Representative)	Name: HO TUNG	Signature: Ho Tung	Date: 14/08/2025
Witnessed By : (Name of JEC Representative)	Name: John Chan	Signature:	Date: 14/08/2025
Witnessed By : (Name of GCL)	Name: Boris Yan	Signature:	Date: 14/08/2025
Witnessed By : (Name of AMMJV)	Name: Andy Tang	Signature: Andy Tang	Date: 14/08/2025
Witnessed By : (Name of)	Name:	Signature:	Date:
Witnessed By : (Name of)	Name:	Signature:	Date:

Gammon

CTA INTERNATIONAL AS CLEAN TUNNEL AIR

Air Purification System – HV Power Supply Units Test & Commissioning Report			
Contract No.:	HY/2019/13	RISC No.:	36858 A
Project:	Central Kowloon Route - Buildings, Electrical and Mechanical	Date:	14/08/2025
Location:	~~YVB~~ / HVB / ~~KVB~~	Room Name:	
T&C Plan Ref. No:	J3883-APS-S-I-17	Page:	
Ref. Dwg. No.:	J3883/MEP/APS/HVB/1603&1604&1605		

Part 3: Inspection and Test for Electrical Installations (Sheet 3 of 5)

C) Functional Test of Residual Current Device (RCD) (TCP Section 4.5.3)

ESP HV Power Supply Cabinets Information

Cabinets ID:	H VB-APS 1 -ESP-PSC-0 2	Main Switch Rating:	80A
Location:	ESP HV Switch Room (01) / 02	Supply Fed From:	HVB-DB-ESP01-2

Circuit No. or Details of Equipment	Type of Protective Device	Rating	Polarity	RCD 50% (ms)	RCD 100% (ms)	Test Result
1	RCBO	16A SP	(P) / F / NA	(P) / F / NA	37.1	(P) / F / NA
2	RCBO	16A SP	(P) / F / NA	(P) / F / NA	27.3	(P) / F / NA
3	RCBO	16A SP	(P) / F / NA	(P) / F / NA	23.1	(P) / F / NA
4	RCBO	16A SP	(P) / F / NA	(P) / F / NA	28.3	(P) / F / NA
5	RCBO	16A SP	(P) / F / NA	(P) / F / NA	27.1	(P) / F / NA
6	RCBO	16A SP	(P) / F / NA	(P) / F / NA	37.4	(P) / F / NA
7	RCBO	16A SP	(P) / F / NA	(P) / F / NA	27.5	(P) / F / NA
8	RCBO	16A SP	(P) / F / NA	(P) / F / NA	33.1	(P) / F / NA
9	RCBO	16A SP	(P) / F / NA	(P) / F / NA	27.8	(P) / F / NA
10	RCBO	16A SP	(P) / F / NA	(P) / F / NA	32.1	(P) / F / NA

Remark: P / F / NA = Pass / Fail / Not Applicable
Tripping time of RCD for 30mA leakage current shall be within 300ms.

Comment:

Test / Checked By : REW No.: W133567 Grade BH1 (Name of CTA Representative)	Name: HO TUNG	Signature: Ho Tung	Date: 14/08/2025
Witnessed By : (Name of JEC Representative)	Name: John Chan	Signature:	Date: 14/08/2025
Witnessed By : (Name of GCL)	Name: Boris Yan	Signature:	Date: 14/08/2025
Witnessed By : (Name of AMMJV)	Name: Andy Tang	Signature:	Date: 14/08/2025
Witnessed By : (Name of)	Name:	Signature:	Date:
Witnessed By : (Name of)	Name:	Signature:	Date:

Gammon

CTA INTERNATIONAL AS CLEAN TUNNEL AIR

Air Purification System – HV Power Supply Units Test & Commissioning Report			
Contract No.:	HY/2019/13	RISC No.:	36858 A
Project:	Central Kowloon Route - Buildings, Electrical and Mechanical	Date:	14/08/2025
Location:	~~YVB~~ / HVB / ~~KVB~~	Room Name:	
T&C Plan Ref. No:	J3883-APS-S-I-17	Page:	
Ref. Dwg. No.:	J3883/MEP/APS/HVB/1603&1604&1605		

Part 3: Inspection and Test for Electrical Installations (Sheet 4 of 5)

D) Functional Test and Circuitry Check (TCP Section 4.5.3)

ESP HV Power Supply Cabinets Information

Cabinets ID:	H VB-APS 1 -ESP-PSC-0 1	Main Switch Rating:	80A
Location:	ESP HV Switch Room (01) / 02	Supply Fed From:	HVB-DB-ESP01-1

Circuit No. or Details of Equipment	Type of Protective Device	Rating	Isolator	MCB	RCD Test Button	Circuitry Check
1	RCBO	16A SP	P / F / (NA)	P / F / (NA)	(P) / F / NA	(P) / F / NA
2	RCBO	16A SP	P / F / (NA)	P / F / (NA)	(P) / F / NA	(P) / F / NA
3	RCBO	16A SP	P / F / (NA)	P / F / (NA)	(P) / F / NA	(P) / F / NA
4	RCBO	16A SP	P / F / (NA)	P / F / (NA)	(P) / F / NA	(P) / F / NA
5	RCBO	16A SP	P / F / (NA)	P / F / (NA)	(P) / F / NA	(P) / F / NA
6	RCBO	16A SP	P / F / (NA)	P / F / (NA)	(P) / F / NA	(P) / F / NA
7	RCBO	16A SP	P / F / (NA)	P / F / (NA)	(P) / F / NA	(P) / F / NA
8	RCBO	16A SP	P / F / (NA)	P / F / (NA)	(P) / F / NA	(P) / F / NA
9	RCBO	16A SP	P / F / (NA)	P / F / (NA)	(P) / F / NA	(P) / F / NA
10	RCBO	16A SP	P / F / (NA)	P / F / (NA)	(P) / F / NA	(P) / F / NA
A/C Unit	RCBO	16A SP	P / F / (NA)	P / F / (NA)	(P) / F / NA	(P) / F / NA

Remark: P / F / NA = Pass / Fail / Not Applicable

Comment:

Test / Checked By : REW No.: W133567 Grade B+M (Name of CTA Representative)	Name: HO TUNG	Signature: Ho Tung	Date: 14/08/2025
Witnessed By : (Name of JEC Representative)	Name: John Chan	Signature:	Date: 14/08/2025
Witnessed By : (Name of GCL)	Name: Boris Yan	Signature:	Date: 14/08/2025
Witnessed By : (Name of AMMJV)	Name: Andy Tang	Signature: Ivo Tang	Date: 14/08/2025
Witnessed By : (Name of)	Name:	Signature:	Date:
Witnessed By : (Name of)	Name:	Signature:	Date:

Gammon

CTA INTERNATIONAL AS CLEAN TUNNEL AIR

Air Purification System – HV Power Supply Units Test & Commissioning Report			
Contract No.:	HY/2019/13	RISC No.:	36858 A
Project:	Central Kowloon Route - Buildings, Electrical and Mechanical	Date:	14/08/2025
Location:	~~YVB~~ / HVB / ~~KVB~~	Room Name:	
T&C Plan Ref. No:	J3883-APS-S-I-17	Page:	
Ref. Dwg. No.:	J3883/MEP/APS/HVB/1603&1604&1605		

Part 3: Inspection and Test for Electrical Installations (Sheet 4 of 5)

D) Functional Test and Circuitry Check (TCP Section 4.5.3)

ESP HV Power Supply Cabinets Information

Cabinets ID:	H VB-APS 1 -ESP-PSC-0 2	Main Switch Rating:	80A
Location:	ESP HV Switch Room (01) / 02	Supply Fed From:	HVB-DB-ESP01-2

Circuit No. or Details of Equipment	Type of Protective Device	Rating	Isolator	MCB	RCD Test Button	Circuitry Check
1	RCBO	16A SP	P / F / (NA)	P / F / (NA)	(P) / F / NA	(P) / F / NA
2	RCBO	16A SP	P / F / (NA)	P / F / (NA)	(P) / F / NA	(P) / F / NA
3	RCBO	16A SP	P / F / (NA)	P / F / (NA)	(P) / F / NA	(P) / F / NA
4	RCBO	16A SP	P / F / (NA)	P / F / (NA)	(P) / F / NA	(P) / F / NA
5	RCBO	16A SP	P / F / (NA)	P / F / (NA)	(P) / F / NA	(P) / F / NA
6	RCBO	16A SP	P / F / (NA)	P / F / (NA)	(P) / F / NA	(P) / F / NA
7	RCBO	16A SP	P / F / (NA)	P / F / (NA)	(P) / F / NA	(P) / F / NA
8	RCBO	16A SP	P / F / (NA)	P / F / (NA)	(P) / F / NA	(P) / F / NA
9	RCBO	16A SP	P / F / (NA)	P / F / (NA)	(P) / F / NA	(P) / F / NA
10	RCBO	16A SP	P / F / (NA)	P / F / (NA)	(P) / F / NA	(P) / F / NA
A/C Unit	RCBO	16A SP	P / F / (NA)	P / F / (NA)	(P) / F / NA	(P) / F / NA

Remark: P / F / NA = Pass / Fail / Not Applicable

Comment:

Test / Checked By : REW No.: W133587 Grade B+H (Name of CTA Representative)	Name: HO TUNG	Signature: Ho Tung	Date: 14/08/2025
Witnessed By : (Name of JEC Representative)	Name: John Chan	Signature:	Date: 14/08/2025
Witnessed By : (Name of GCL)	Name: Boris Yan	Signature:	Date: 14/08/2025
Witnessed By : (Name of AMMJV)	Name: Andy Tang	Signature:	Date: 14/08/2025
Witnessed By : (Name of)	Name:	Signature:	Date:
Witnessed By : (Name of)	Name:	Signature:	Date:

Gammon

CTA INTERNATIONAL AS CLEAN TUNNEL AIR

Air Purification System – HV Power Supply Units Test & Commissioning Report			
Contract No.:	HY/2019/13	RISC No.:	36858 A
Project:	Central Kowloon Route - Buildings, Electrical and Mechanical	Date:	14/08/2025
Location:	~~YVB~~ / HVB / ~~KVB~~	Room Name:	
T&C Plan Ref. No:	J3883-APS-S-I-17	Page:	
Ref. Dwg. No.:	J3883/MEP/APS/HVB/1603&1604&1605		

Part 3: Inspection and Test for Electrical Installations (Sheet 5 of 5)

E) Bonding Continuity Test

	Equipment Description	Equipotential Bonding (Ω)	Supplementary Bonding (Ω)	Test Result
APS1-PSC-01	Main Earthing Terminal	0.1	N/A	(P) / F / NA
	Cabient Door	N/A	0.1	(P) / F / NA
	Trunking	N/A	0.1	(P) / F / NA
	Cable Tray	N/A	0.1	(P) / F / NA
	PSU case	N/A	0.1	(P) / F / NA
				P / F / NA
APS1-PSC-02	Main Earthing Terminal	0.1	N/A	(P) / F / NA
	Cabient Door	N/A	0.1	(P) / F / NA
	Trunking	N/A	0.1	(P) / F / NA
	Cable Tray	N/A	0.1	(P) / F / NA
	PSU case	N/A	0.1	(P) / F / NA
				P / F / NA
				P / F / NA
				P / F / NA
				P / F / NA

Remark: P / F / NA = Pass / Fail / Not Applicable
The Passing Criteria of the Reading of Continuity test should be <1Ω.

Comment:

Test / Checked By : REW No.: W137567 Grade B+H (Name of CTA Representative)	Name: Ho Tung	Signature: Ho Tung	Date: 14/08/2025
Witnessed By : (Name of JEC Representative)	Name: John Chan	Signature:	Date: 14/08/2025
Witnessed By : (Name of GCL)	Name: Boris Yan	Signature:	Date: 14/08/2025
Witnessed By : (Name of AMMJV)	Name: Andy Tang	Signature: Andy Tang	Date: 14/08/2025
Witnessed By : (Name of)	Name:	Signature:	Date:
Witnessed By : (Name of)	Name:	Signature:	Date:

Gammon

CTA INTERNATIONAL AS

Air Purification System – HV Power Supply Units Test & Commissioning Report			
Contract No.:	HY/2019/13	RISC No.:	36854A
Project:	Central Kowloon Route - Buildings, Electrical and Mechanical	Date:	14/08/2025
Location:	~~XVB~~ / HVB / ~~RVB~~	Room Name:	
T&C Plan Ref. No:	J3883-TVS-S-I17	Page:	
Ref. Dwg. No.:	J3883-MEP-APS-HVB-1604 & 1605 & 1606		

Part 4 : Functional and Performance Tests for HV Power Supply Units (Sheet 1 of 5)

A) Maximum Voltage Withstand Test for ESP Cell (TCP Section 4.6.1)

From:	ESP HV Switch Room 01 / 02	To:	APS Plenum No 01 / 02 / 03 Sub-assembly A / ~~B / C / D / E~~

Step 1 & 3 - Insulation Resistance Test before and after the Maximum Voltage Withstand Test

Items	Circuit No. or Details of Equipment	Insulation Resistance (MΩ)	
		Before Max. Withstand Tests	After Max. Withstand Tests
1	Sub-Assembly A (1st Col. Ionizer to Earth)	261G (Lower 3 ESP Cell) / 268G (Upper 3 ESP Cell)	258G (Lower 3 ESP Cell) / 267G (Upper 3 ESP Cell)
2	Sub-Assembly A (2nd Col. Ionizer to Earth)	259G (Lower 3 ESP Cell) / 270G (Upper 3 ESP Cell)	277G (Lower 3 ESP Cell) / 265G (Upper 3 ESP Cell)
3	Sub-Assembly A (3rd Col. Ionizer to Earth)	240G (Lower 3 ESP Cell) / 255G (Upper 3 ESP Cell)	263G (Lower 3 ESP Cell) / 273G (Upper 3 ESP Cell)
4	Sub-Assembly A (1st to 3rd Col. Collector the Earth)	255G (1st Col.) / 258G (2nd Col.) / 269G (3rd Col.)	273G (1st Col.) / 270G (2nd Col.) / 253G (3rd Col.)

Step 2 - Maximum Voltage Withstand Test

Items	Test Voltage (kV DC)	Duration (min)	Measured Voltage (kV DC)	Test Result
1	20 (Ionizer)	1	20.2	P / F / NA
2	20 (Ionizer)		20.2	P / F / NA
3	20 (Ionizer)		20.2	P / F / NA
4	8 (Collector)	1	7.2	P / F / NA

B) List of Testing Equipment / Instruments

Type	Model	Serial No	Calibration Cert. No	Date of Cert.
HV insulation tester	AR3125	6819355	KSZS25021278D001	26/02/2025
DC Voltage Meter	HVP-40DM	20230668	ZD202508111226	11/08/2025

Remark: P / F / NA = Pass / Fail / Not Applicable
The passing criteria for the test is passing the insulation test after for maximum voltage withstand test.
The insulation resistance is over 1000MOhm (*) for HV DC Cable and 30MOhm for ESP Cell

Comment:

	Name:	Signature:	Date:
Test / Checked By : REW No.: W133567 Grade: BM1 (Name of CTA Representative)	Ho Tung	Ho Tung	14/8/25
Witnessed By : (Name of JEC Representative)	John Chan		14/8/25
Witnessed By : (Name of GCL)	Boris Yan		14/8/25
Witnessed By : (Name of AMMJV)	Andy Tang	Andy Tang	14/8/25
Witnessed By : (Name of)			
Witnessed By : (Name of)			

Gammon

CTA INTERNATIONAL AS CLEAN TUNNEL AIR

Air Purification System – HV Power Supply Units Test & Commissioning Report			
Contract No.:	HY/2019/13	RISC No.:	36854A
Project:	Central Kowloon Route - Buildings, Electrical and Mechanical	Date:	14/08/2025
Location:	~~HVB~~ / HVB / ~~HVB~~	Room Name:	
T&C Plan Ref. No:	J3883-TVS-S-I17	Page:	
Ref. Dwg. No.:	J3883-MEP-APS-HVB-1604 & 1605 & 1606		

Part 4 : Functional and Performance Tests for HV Power Supply Units (Sheet 1 of 5)

A) Maximum Voltage Withstand Test for ESP Cell (TCP Section 4.6.1)

From:	ESP HV Switch Room 01 / 02	To:	APS Plenum No.01 / 02 / 03 Sub-assembly A / ~~B / C / D / E~~

Step 1 & 3 - Insulation Resistance Test before and after the Maximum Voltage Withstand Test

Items	Circuit No. or Details of Equipment	Insulation Resistance (MΩ)	
		Before Max. Withstand Tests	After Max. Withstand Tests
1	Sub-Assembly A (1st Col. Ionizer to Earth)	268G (Lower 3 ESP Cell) / 273G (Upper 3 ESP Cell)	265G (Lower 3 ESP Cell) / 267G (Upper 3 ESP Cell)
2	Sub-Assembly A (2nd Col. Ionizer to Earth)	248G (Lower 3 ESP Cell) / 257G (Upper 3 ESP Cell)	288G (Lower 3 ESP Cell) / 278G (Upper 3 ESP Cell)
3	Sub-Assembly A (3rd Col. Ionizer to Earth)	249G (Lower 3 ESP Cell) / 265G (Upper 3 ESP Cell)	260G (Lower 3 ESP Cell) / 269G (Upper 3 ESP Cell)
4	Sub-Assembly A (1st to 3rd Col. Collector the Earth)	215G (1st Col.) / 223G (2nd Col.) / 234G (3rd Col.)	260G (1st Col.) / 255G (2nd Col.) / 271G (3rd Col.)

Step 2 - Maximum Voltage Withstand Test

Items	Test Voltage (kV DC)	Duration (min)	Measured Voltage (kV DC)	Test Result
1	20 (Ionizer)	1	20.2	P / F / NA
2	20 (Ionizer)		20.2	P / F / NA
3	20 (Ionizer)		20.2	P / F / NA
4	8 (Collector)	1	7.2	P / F / NA

B) List of Testing Equipment / Instruments

Type	Model	Serial No	Calibration Cert. No	Date of Cert.
HV insulation tester	AR3125	6819355	KSZS25021278D001	26/02/2025
DC Voltage Meter	HVP-40DM	20230668	ZD202508111226	11/08/2025

Remark: P / F / NA = Pass / Fail / Not Applicable
The passing criteria for the test is passing the insulation test after for maximum voltage withstand test.
The insulation resistance is over 1000MOhm (*) for HV DC Cable and 30MOhm for ESP Cell

Comment:

	Name:	Signature:	Date:
Test / Checked By : REW No.: W133569 Grade BH (Name of CTA Representative)	Ho Tung	Ho Tung	14/8/25
Witnessed By : (Name of JEC Representative)	John Chan		14/8/25
Witnessed By : (Name of GCL)	Boris Yan		14/8/25
Witnessed By : (Name of AMMJV)	Andy Tang	Andy Tang	14/8/25
Witnessed By : (Name of)			
Witnessed By : (Name of)			

Gammon

CTA INTERNATIONAL AS CLEAN TUNNEL AIR

Air Purification System – HV Power Supply Units Test & Commissioning Report			
Contract No.:	HY/2019/13	RISC No.:	36854A
Project:	Central Kowloon Route - Buildings, Electrical and Mechanical	Date:	14/08/2025
Location:	~~VVB~~ / HVB / ~~RVB~~	Room Name:	
T&C Plan Ref. No:	J3883-TVS-S-I17	Page:	
Ref. Dwg. No.:	J3883-MEP-APS-HVB-1604 & 1605 & 1606		

Part 4 : Functional and Performance Tests for HV Power Supply Units (Sheet 1 of 5)

A) Maximum Voltage Withstand Test for ESP Cell (TCP Section 4.6.1)

From:	ESP HV Switch Room 01 / 02	To:	APS Plenum No 01 / 02 / 03 Sub-assembly ~~A / B / C / D / E~~ C

Step 1 & 3 - Insulation Resistance Test before and after the Maximum Voltage Withstand Test

Items	Circuit No. or Details of Equipment	Insulation Resistance (MΩ)	
		Before Max. Withstand Tests	After Max. Withstand Tests
1	Sub-Assembly C (1st Col. Ionizer to Earth)	237 G (Lower 3 ESP Cell) / 244 G (Upper 3 ESP Cell)	256 G (Lower 3 ESP Cell) / 268 G (Upper 3 ESP Cell)
2	Sub-Assembly C (2nd Col. Ionizer to Earth)	260 G (Lower 3 ESP Cell) / 273 G (Upper 3 ESP Cell)	244 G (Lower 3 ESP Cell) / 258 G (Upper 3 ESP Cell)
3	Sub-Assembly C (3rd Col. Ionizer to Earth)	263 G (Lower 3 ESP Cell) / 262 G (Upper 3 ESP Cell)	266 G (Lower 3 ESP Cell) / 273 G (Upper 3 ESP Cell)
4	Sub-Assembly C (1st to 3rd Col. Collector the Earth)	221 G (1st Col.) / 235 G (2nd Col.) / 246 G (3rd Col.)	250 G (1st Col.) / 256 G (2nd Col.) / 263 G (3rd Col.)

Step 2 - Maximum Voltage Withstand Test

Items	Test Voltage (kV DC)	Duration (min)	Measured Voltage (kV DC)	Test Result
1	20 (Ionizer)	1	20.2	P / F / NA
2	20 (Ionizer)		20.2	P / F / NA
3	20 (Ionizer)		20.2	P / F / NA
4	8 (Collector)	1	7.2	P / F / NA

B) List of Testing Equipment / Instruments

Type	Model	Serial No	Calibration Cert. No	Date of Cert.
HV insulation tester	AR3125	6819355	KSZS25021278D001	26/02/2025
DC Voltage Meter	HVP-40DM	20230668	ZD202508111226	11/08/2025

Remark: P / F / NA = Pass / Fail / Not Applicable
The passing criteria for the test is passing the insulation test after for maximum voltage withstand test.
The insulation resistance is over 1000MOhm (*) for HV DC Cable and 30MOhm for ESP Cell

Comment:

	Name:	Signature:	Date:
Test / Checked By : REW No.: W133567 Grade: PH (Name of CTA Representative)	Ho Tung	Ho Tung	14/8/25
Witnessed By : (Name of JEC Representative)	John Chan		14/8/25
Witnessed By : (Name of GCL)	Boris Yan		14/8/25
Witnessed By : (Name of AMMJV)	Andy Tang	Andy Tang	14/8/25
Witnessed By : (Name of)			
Witnessed By : (Name of)			

Gammon

CTA INTERNATIONAL AS CLEAN TUNNEL AIR

Air Purification System – HV Power Supply Units Test & Commissioning Report			
Contract No.:	HY/2019/13	RISC No.:	36854A
Project:	Central Kowloon Route - Buildings, Electrical and Mechanical	Date:	14/08/2025
Location:	~~HVB~~ / HVB / ~~HVB~~	Room Name:	
T&C Plan Ref. No:	J3883-TVS-S-I17	Page:	
Ref. Dwg. No.:	J3883-MEP-APS-HVB-1604 & 1605 & 1606		

Part 4 : Functional and Performance Tests for HV Power Supply Units (Sheet 1 of 5)

A) Maximum Voltage Withstand Test for ESP Cell (TCP Section 4.6.1)

From:	ESP HV Switch Room 01 / 02	To:	APS Plenum No 01 / 02 / 03 Sub-assembly A / ~~B / C / D / E~~ D

Step 1 & 3 - Insulation Resistance Test before and after the Maximum Voltage Withstand Test

Items	Circuit No. or Details of Equipment	Insulation Resistance (MΩ)	
		Before Max. Withstand Tests	After Max. Withstand Tests
1	Sub-Assembly D (1st Col. Ionizer to Earth)	256 G (Lower 3 ESP Cell) / 267 G (Upper 3 ESP Cell)	277 G (Lower 3 ESP Cell) / 270 G (Upper 3 ESP Cell)
2	Sub-Assembly D (2nd Col. Ionizer to Earth)	248 G (Lower 3 ESP Cell) / 245 G (Upper 3 ESP Cell)	261 G (Lower 3 ESP Cell) / 266 G (Upper 3 ESP Cell)
3	Sub-Assembly D (3rd Col. Ionizer to Earth)	273 G (Lower 3 ESP Cell) / 265 G (Upper 3 ESP Cell)	255 G (Lower 3 ESP Cell) / 271 G (Upper 3 ESP Cell)
4	Sub-Assembly D (1st to 3rd Col. Collector the Earth)	211 G (1st Col.) / 223 G (2nd Col.) / 229 G (3rd Col.)	230 G (1st Col.) / 250 G (2nd Col.) / 260 G (3rd Col.)

Step 2 - Maximum Voltage Withstand Test

Items	Test Voltage (kV DC)	Duration (min)	Measured Voltage (kV DC)	Test Result
1	20 (Ionizer)	1	20.2	P / F / NA
2	20 (Ionizer)		20.2	P / F / NA
3	20 (Ionizer)		20.2	P / F / NA
4	8 (Collector)	1	7.2	P / F / NA

B) List of Testing Equipment / Instruments

Type	Model	Serial No	Calibration Cert. No	Date of Cert.
HV insulation tester	AR3125	6819355	KSZS25021278D001	26/02/2025
DC Voltage Meter	HVP-40DM	20230668	ZD202508111226	11/08/2025

Remark: P / F / NA = Pass / Fail / Not Applicable
The passing criteria for the test is passing the insulation test after for maximum voltage withstand test.
The insulation resistance is over 1000MOhm (*) for HV DC Cable and 30MOhm for ESP Cell

Comment:

	Name:	Signature:	Date:
Test / Checked By : REW No.: W133567 Grade BFH (Name of CTA Representative)	Ho Tung	Ho Tung	14/8/25
Witnessed By : (Name of JEC Representative)	John Chan		14/8/25
Witnessed By : (Name of GCL)	Boris Yan		14/8/25
Witnessed By : (Name of AMMJV)	Andy Tang		14/8/25
Witnessed By : (Name of)			
Witnessed By : (Name of)			

Gammon

CTA INTERNATIONAL AS CLEAN TUNNEL AIR

Air Purification System – HV Power Supply Units Test & Commissioning Report			
Contract No.:	HY/2019/13	RISC No.:	36854A
Project:	Central Kowloon Route - Buildings, Electrical and Mechanical	Date:	14/08/2025
Location:	~~HVB~~ / HVB / ~~HVB~~	Room Name:	
T&C Plan Ref. No:	J3883-TVS-S-I17	Page:	
Ref. Dwg. No.:	J3883-MEP-APS-HVB-1604 & 1605 & 1606		

Part 4 : Functional and Performance Tests for HV Power Supply Units (Sheet 1 of 5)

A) Maximum Voltage Withstand Test for ESP Cell (TCP Section 4.6.1)

From:	ESP HV Switch Room 01 / 02	To:	APS Plenum No 01 / 02 / 03 Sub-assembly ~~A~~ E / ~~B / C / D / E~~

Step 1 & 3 - Insulation Resistance Test before and after the Maximum Voltage Withstand Test

Items	Circuit No. or Details of Equipment	Insulation Resistance (MΩ)	
		Before Max. Withstand Tests	After Max. Withstand Tests
1	Sub-Assembly E (1st Col. Ionizer to Earth)	255G (Lower 3 ESP Cell) / 271G (Upper 3 ESP Cell)	263G (Lower 3 ESP Cell) / 270G (Upper 3 ESP Cell)
2	Sub-Assembly G (2nd Col. Ionizer to Earth)	245G (Lower 3 ESP Cell) / 265G (Upper 3 ESP Cell)	266G (Lower 3 ESP Cell) / 268G (Upper 3 ESP Cell)
3	Sub-Assembly G (3rd Col. Ionizer to Earth)	219G (Lower 3 ESP Cell) / 238G (Upper 3 ESP Cell)	277G (Lower 3 ESP Cell) / 280G (Upper 3 ESP Cell)
4	Sub-Assembly G (1st to 3rd Col. Collector the Earth)	273G (1st Col.) / 265G (2nd Col.) / 250G (3rd Col.)	266G (1st Col.) / 256G (2nd Col.) / 266G (3rd Col.)

Step 2 - Maximum Voltage Withstand Test

Items	Test Voltage (kV DC)	Duration (min)	Measured Voltage (kV DC)	Test Result
1	20 (Ionizer)	1	20.2	P / F / NA
2	20 (Ionizer)		20.2	P / F / NA
3	20 (Ionizer)		20.2	P / F / NA
4	8 (Collector)	1	7.2	P / F / NA

B) List of Testing Equipment / Instruments

Type	Model	Serial No	Calibration Cert. No	Date of Cert.
HV Insulation tester	AR3125	6819355	KSZS25021278D001	26/02/2025
DC Voltage Meter	HVP-40DM	20230668	ZD202508111226	11/08/2025

Remark: P / F / NA = Pass / Fail / Not Applicable
The passing criteria for the test is passing the insulation test after for maximum voltage withstand test.
The insulation resistance is over 1000MOhm (*) for HV DC Cable and 30MOhm for ESP Cell

Comment:

	Name:	Signature:	Date:
Test / Checked By : REW No.: W133569 Grade ~~F~~H (Name of CTA Representative)	Ho Tung	Ho Tung	14/8/25
Witnessed By : (Name of JEC Representative)	John Chan		14/8/25
Witnessed By : (Name of GCL)	Boris Yan		14/8/25
Witnessed By : (Name of AMMJV)	Andy Tang	Andy Tang	14/8/25
Witnessed By : (Name of)			
Witnessed By : (Name of)			

Gammon

CTA INTERNATIONAL A/S CLEAN TUNNEL A/S

Air Purification System – HV Power Supply Units Test & Commissioning Report			
Contract No.:	HY/2019/13	RISC No.:	36854A
Project:	Central Kowloon Route - Buildings, Electrical and Mechanical	Date:	14/08/2025
Location:	YVB / HVB / KVB	Room Name:	
T&C Plan Ref. No:	J3383-APS-5-I-17	Page:	
Ref. Dwg. No.:	J3383/MEP/APS/HVB/1604 & 1605 & 1606		

Part 4 : Functional and Performance Tests for HV Power Supply Units (Sheet 2A of 5)

C) ESP HV Power Supply Cabinets Information

Cabinets ID:	HVB-APS 1 -ESP-PSC-0 1	Main Switch Rating:	80A
Location:	ESP HV Switch Room 01 / 02	Fed From:	HVB-DB-~~2~~1 ESP01-1

D) Output Voltage Measurement for HV Power Supply Units (TCP Section 4.6.2)

Item	Circuit No. or Details of Equipment	Vol-meter Reading at PSU (kV)	Am-meter Reading of PSU (mA)	Measured Voltage (kV) at ESP	Result (see remark)
1	HVB-APS 1 -PSU-01 A Subassembly 14 kV (I1)	14.0	68.5	14.2	P / F
2	HVB-APS 1 -PSU-02 A Subassembly 14 kV (I2)	14.0	67.5	14.2	P / F
3	HVB-APS 1 -PSU-03 A Subassembly 14 kV (I3)	14.0	68.5	14.2	P / F
4	HVB-APS 1 -PSU-04 A Subassembly 6.5 kV (C)	~~14.0~~ 6.5	16.7	6.7	P / F
5	HVB-APS 1 -PSU-05 B Subassembly 14 kV (I1)	14.0	68.5	14.1	P / F
6	HVB-APS 1 -PSU-06 B Subassembly 14 kV (I2)	14.0	69.7	14.1	P / F
7	HVB-APS 1 -PSU-07 B Subassembly 14 kV (I3)	14.0	68.8	14.1	P / F
8	HVB-APS 1 -PSU-08 B Subassembly 6.5 kV (C)	6.5	15.2	6.6	P / F
9	HVB-APS 1 -PSU-09 C Subassembly 14 kV (I1)	14.0	67.1	14.1	P / F
10	HVB-APS 1 -PSU-10 C Subassembly 14 kV (I2)	14.0	70.1	14.1	P / F

E) List of Testing Equipment / Instruments

Type	Model	Serial No	Calibration Cert. No	Date of Cert.
~~HVP~~				
HVDC Voltagemeter	HVP-40PM	20230668	2025080111326	11/08/2025

Remark: P / F = Pass / Fail, measured output voltage for ionizer and for collector is±14kV ±5% 6.5kV ±5%

Comment:

Test / Checked By : REW No.: W13356/7 Grade B+H (Name of CTA Representative)	Name: HO TUNG	Signature: Ho Tung	Date: 14/08/2025
Witnessed By : (Name of JEC Representative)	Name: John Chan	Signature:	Date: 14 AUG 2025
Witnessed By : (Name of GCL)	Name: Boris Yan	Signature:	Date: 14 AUG 2025
Witnessed By : (Name of AMMJV)	Name: Andy Tang	Signature: Andy Tang	Date: 14 AUG 2025
Witnessed By : (Name of)	Name:	Signature:	Date:
Witnessed By : (Name of)	Name:	Signature:	Date:

Gammon

CTA INTERNATIONAL AS CLEAN TUNNEL AIR

Air Purification System – HV Power Supply Units Test & Commissioning Report			
Contract No.:	HY/2019/13	RISC No.:	36854A
Project:	Central Kowloon Route - Buildings, Electrical and Mechanical	Date:	14/08/2025
Location:	YVB / HVB / KVB	Room Name:	
T&C Plan Ref. No:	J3883-APS-S-I-17	Page:	
Ref. Dwg. No.:	J3883/MEP/APS/HVB/1604B/1605A/1606		

Part 4 : Functional and Performance Tests for HV Power Supply Units (Sheet 2B of 5)

C) ESP HV Power Supply Cabinets Information

Cabinets ID:	HVB-APS1-ESP-PSC-02	Main Switch Rating:	80A
Location:	ESP HV Switch Room 01 / 02	Fed From:	HVB-DB-ESP01-I

D) Output Voltage Measurement for HV Power Supply Units (TCP Section 4.6.2)

Item	Circuit No. or Details of Equipment	Vol-meter Reading at PSU (kV)	Am-meter Reading of PSU (mA)	Measured Voltage (kV) at ESP	Result (see remark)
1	HVB-APS1-PSU-11 C Subassembly 14kV (I3)	14.05	71.1	14.1	P / F
2	HVB-APS1-PSU-12 C Subassembly 6.5kV (C)	6.5 ~~14.0~~	11.1	6.6	P / F
3	HVB-APS1-PSU-13 D Subassembly 14kV (I1)	14.0	71.2	14.1	P / F
4	HVB-APS1-PSU-14 D Subassembly 14kV (I2)	14.0	76.5	14.1	P / F
5	HVB-APS1-PSU-15 D Subassembly 14kV (I3)	14.0	69.5	14.1	P / F
6	HVB-APS1-PSU-16 D Subassembly 6.5kV (C)	6.5	10.4	6.5	P / F
7	HVB-APS1-PSU-17 E Subassembly 14kV (I1)	14.0	71.8	14.1	P / F
8	HVB-APS1-PSU-18 E Subassembly 14kV (I2)	14.0	69.2	14.1	P / F
9	HVB-APS1-PSU-19 E Subassembly 14kV (I3)	14.0	63.4	14.1	P / F
10	HVB-APS1-PSU-20 E Subassembly 6.5kV (C)	6.5	12.5	6.5	P / F

E) List of Testing Equipment / Instruments

Type	Model	Serial No	Calibration Cert. No	Date of Cert.
DC voltage Meter	HVP-60DM	22230668	ZD 2025081 1226	11/08/2025

Remark: P / F = Pass / Fail, measured output voltage for ionizer and for collector is±14kV ±5% 6.5kV ±5%

Comment:

Test / Checked By : REW No.: V133567 Grade B+H (Name of CTA Representative)	Name: HO TUNG	Signature: Ho Tung	Date: 14/08/2025
Witnessed By : (Name of JEC Representative)	Name: John Chan	Signature:	Date: 14 AUG 2025
Witnessed By : (Name of GCL)	Name: Boris Yan	Signature:	Date: 14 AUG 2025
Witnessed By : (Name of AMNJV)	Name: Andy Tang	Signature: Andy Tang	Date: 14 AUG 2025
Witnessed By : (Name of)	Name:	Signature:	Date:
Witnessed By : (Name of)	Name:	Signature:	Date:

Gammon

CTA INTERNATIONAL AS CLEAN TUNNEL A/S

Air Purification System – HV Power Supply Units Test & Commissioning Report			
Contract No.:	HY/2019/13	RISC No.:	36854A
Project:	Central Kowloon Route - Buildings, Electrical and Mechanical	Date:	14/08/2025
Location:	YVB / HVB / KVB	Room Name:	
T&C Plan Ref. No:	I5883-APS-S-I-17	Page:	
Ref. Dwg. No.:	I5883/MEP/APS/HVB/1604&1605&1606		

Part 4 : Functional and Performance Tests for HV Power Supply Units (Sheet 4A of 5)

G) Functional Test for the Constant Current Control Mode Cabinets ID: H VB-APS 1 -ESP-PSC-02

(TCP Section 4.6.4)

Item	Equipment Description	Functional Test for Constant Current Control Mode				
		Before Earth Fault Simulation		During Earth Fault Simulation		Constant Output Current Observed on PSU *
		"CC" not light up	Output Current on PSU	"CC" light up	Output Current on PSU	
1	H VB-APS 1 -PSU-11 C Subassembly 14 kV (I3)	P / F	69.5 mA	P / F	0 mA	P / F
2	H VB-APS 1 -PSU-12 C Subassembly 6.5 kV (C)	P / F	71.1 mA	P / F	0 mA	P / F
3	H VB-APS 1 -PSU-13 D Subassembly 14 kV (I1)	P / F	69.6 mA	P / F	0 mA	P / F
4	H VB-APS 1 -PSU-14 D Subassembly 14 kV (I2)	P / F	71.2 mA	P / F	0 mA	P / F
5	H VB-APS 1 -PSU-15 D Subassembly 14 kV (I3)	P / F	71.3 mA	P / F	0 mA	P / F
6	H VB-APS 1 -PSU-16 D Subassembly 6.5 kV (C)	P / F	10.5 mA	P / F	0 mA	P / F
7	H VB-APS 1 -PSU-17 E Subassembly 14 kV (I1)	P / F	69.6 mA	P / F	0 mA	P / F
8	H VB-APS 1 -PSU-18 E Subassembly 14 kV (I2)	P / F	69.5 mA	P / F	0 mA	P / F
9	H VB-APS 1 -PSU-19 E Subassembly 14 kV (I3)	P / F	71.2 mA	P / F	0 mA	P / F
10	H VB-APS 1 -PSU-20 E Subassembly 6.5 kV (C)	P / F	10.1 mA	P / F	0 mA	P / F

Remarks: P / F = Pass / Fail,
* Acceptance Criteria for Output Current during the Earth Fault Simulation is ± 5% of before the Fault

Comment:

Test / Checked By : REW No.: W13567 Grade B+H (Name of CTA Representative)	Name: HO TUNG	Signature: Ho Tung	Date: 14/08/2025
Witnessed By : (Name of JEC Representative)	Name: John Chan	Signature:	Date: 14 AUG 2025
Witnessed By : (Name of GCL)	Name: Boris Yan	Signature:	Date: 14 AUG 2025
Witnessed By : (Name of AMMJV)	Name: Andy Tang	Signature: Andy Tang	Date: 14 AUG 2025
Witnessed By : (Name of)	Name:	Signature:	Date:
Witnessed By : (Name of)	Name:	Signature:	Date:

Gammon

CIA INTERNATIONAL AS CLEAN TUNNEL AIR

Air Purification System – HV Power Supply Units Test & Commissioning Report			
Contract No.:	HY/2019/13	RISC No.:	36854A
Project:	Central Kowloon Route - Buildings, Electrical and Mechanical	Date:	14/08/2025
Location:	YVB / ~~HVB~~ / KVB	Room Name:	
T&C Plan Ref. No:	35883 - APS - CA - 17	Page:	
Ref. Dwg. No.:	35883/MEP/~~AB~~ B APS / HVB / 1604 & 1605 & 1606		

Part 4 : Functional and Performance Tests for HV Power Supply Units (Sheet 4B of 5)

G) Functional Test for the Constant Current Control Mode Cabinets ID: H VB-APS 1 -ESP-PSC-01

(TCP Section 4.6.4)

Item	Equipment Description	Functional Test for Constant Current Control Mode				
		Before Earth Fault Simulation		During Earth Fault Simulation		Constant Output Current Observed on PSU *
		"CC" not light up	Output Current on PSU	"CC" light up	Output Current on PSU	
1	H VB-APS 1 -PSU-01 A Subassembly 14 kV (21)	P / F	65.1 mA	P / F	0 mA	P / F
2	H VB-APS 1 -PSU-02 A Subassembly 14 kV (22)	P / F	67.2 mA	P / F	0 mA	P / F
3	H VB-APS 1 -PSU-03 A Subassembly 14 kV (23)	P / F	67.7 mA	P / F	0 mA	P / F
4	H VB-APS 1 -PSU-04 A Subassembly 6.5 kV (C)	P / F	7.7 mA	P / F	0 mA	P / F
5	H VB-APS 1 -PSU-05 B Subassembly 14 kV (21)	P / F	67.4 mA	P / F	0 mA	P / F
6	H VB-APS 1 -PSU-06 B Subassembly 14 kV (22)	P / F	71.2 mA	P / F	0 mA	P / F
7	H VB-APS 1 -PSU-07 B Subassembly 14 kV (23)	P / F	78.1 mA	P / F	0 mA	P / F
8	H VB-APS 1 -PSU-08 B Subassembly 6.5 kV (C)	P / F	12.3 mA	P / F	0 mA	P / F
9	H VB-APS 1 -PSU-09 C Subassembly 14 kV (21)	P / F	77.1 mA	P / F	0 mA	P / F
10	H VB-APS 1 -PSU-10 C Subassembly 14 kV (22)	P / F	70.1 mA	P / F	0 mA	P / F

Remarks: P / F = Pass / Fail,
* Acceptance Criteria for Output Current during the Earth Fault Simulation is ± 5% of before the Fault

Comment:

Test / Checked By : REW No.: W 133567 Grade B+H (Name of CTA Representative)	Name: HO TUNG	Signature: Ho Tung	Date: 14/08/2025
Witnessed By : (Name of JEC Representative)	Name: John Chan	Signature:	Date: 14 AUG 2025
Witnessed By : (Name of GCL)	Name: Boris Yan	Signature:	Date: 14 AUG 2025
Witnessed By : (Name of AMMJV)	Name: Andy Tang	Signature: Andy Tang	Date: 14 AUG 2025
Witnessed By : (Name of)	Name:	Signature:	Date:
Witnessed By : (Name of)	Name:	Signature:	Date:

Gammon

CTA INTERNATIONAL AS CLEAN TUNNEL AIR

Air Purification System – HV Power Supply Units Test & Commissioning Report			
Contract No.:	HY/2019/13	RISC No.:	36854A
Project:	Central Kowloon Route - Buildings, Electrical and Mechanical	Date:	14/08/2025
Location:	YVB / ~~HVB~~ / KVB I-1	Room Name:	
T&C Plan Ref. No:	73881-APS-S-[illegible]	Page:	
Ref. Dwg. No.:	73883/M&E/APS/HVB/1604k 1605 & 1606		

Part 4 : Functional and Performance Tests for HV Power Supply Units (Sheet 5 of 5)

H) Functional Test for Build-in Door Limit and Door Limit Switches (TCP Section 4.6.8 & 4.6.9)

Items	Circuit No. or Details of Equipment	Build-in Door Limit Switch Front and Rear			Limit Switch Signal at Rear of Cabinet Door correctly to APS PLC	Result
		Cooling Unit switch off ~15s when opened cabinet door	Cooling Unit Switch On ~15s after closed cabinet door	Condenser Fan & Compressor switch on after ~3 mins closed cabinet door		
1	Build-in Door Limit Switch at Cabinet Front Door	N/A	N/A	N/A	N/A	~~P~~ / F
2	Build-in Door Limit Switch at Cabinet Rear Door	N/A	N/A	N/A	N/A	P / F
3	Limit Switch at Rear of Cabinet Door	N/A	N/A	N/A	✓	P / F

Remark: P / F / NA = Pass / Fail / Not Applicable

Comment:

Test / Checked By : REW No.: W133567 Grade Bf/1 (Name of CTA Representative)	Name: HO TUNG	Signature: Ho Tung	Date: 14/08/2025
Witnessed By : (Name of JEC Representative)	Name: John Chan	Signature:	Date: 14 AUG 2025
Witnessed By : (Name of GCL)	Name: Boris Yan	Signature:	Date: 14 AUG 2025
Witnessed By : (Name of AmMV)	Name: Andy Tang	Signature:	Date: 14 Aug 2025
Witnessed By : (Name of)	Name:	Signature:	Date:
Witnessed By : (Name of)	Name:	Signature:	Date:

Gammon

CIA INTERNATIONAL AS

Air Purification System – HV Power Supply Units Test & Commissioning Report			
Contract No.:	HY/2019/13	RISC No.:	36849 A
Project:	Central Kowloon Route - Buildings, Electrical and Mechanical	Date:	14/08/2025
Location:	~~YVB~~ / HVB / ~~KVB~~	Room Name:	
T&C Plan Ref. No:	J3883-APS-S-I-17	Page:	
Ref. Dwg. No.:	J3883/MEP/APS/HVB/3203 & 3204		

Part 1 : Installation Inspection of ESP HV Power Supply Cabinets (Sheet 1 of 3)			
A) ESP HV Power Supply Cabinets Information			
Cabinets ID:	H VB-APS 2 -ESP-PSC-0 1&02	Main Switch Rating:	80A
Location:	ESP HV Switch Room 01 / 02	Supply Fed From:	HVB-DB-ESP02-1

B) Visual Inspection for ESP HV Power Supply Cabinets (TCP Section 4.3.1)		
Items	**Description of Inspection**	**Test Result**
a.	Verify cabinets are installed per the accepted ESP HV Switch Room layout and plant room details	P / F / NA
b.	Check clearance space (≥1400mm front, ≥600mm rear) per EMSD CoP	P / F / NA
c.	Ensure cabinets are securely fixed, sealed, and free of damage, corrosion, wear, or dust	P / F / NA
d.	Check that the cabinet door, door handle and lock are installed and operated properly	P / F / NA
C) Visual Inspection for Cabinet Top Cooling Units (TCP Section 4.3.2)		
a.	Check that the cabinet top cooling units are without visual damage, corrosion or sign of wear and tear	P / F / NA
b.	Check that the cabinet top cooling unit is securely fixed on top of the cabinets according to the accepted shop drawing and fabrication drawing	P / F / NA
c.	Check the exhaust lourve of the cabinet cooling unit to ensure no obstructions or blockages	P / F / NA
d.	Check the internal air duct is connected properly with the cabinet top cooling unit	P / F / NA
e.	Check the cable connection between cabinet and cooling unit are completed properly	P / F / NA
Remark: P / F / NA = Pass / Fail / Not Applicable		
Comment:		

Test / Checked By : REW No.: W133587 Grade B+M (Name of CTA Representative)	Name: HO TUNG	Signature: Ho Tung	Date: 14/08/2025
Witnessed By : (Name of JEC Representative)	Name: John Chan	Signature:	Date: 14 AUG 2025
Witnessed By : (Name of GCL)	Name: Raymond Lau	Signature:	Date: 14 AUG 2025
Witnessed By : (Name of AMMJV)	Name: Andy Tang	Signature: Andy Tang	Date: 14 AUG 2025
Witnessed By : (Name of)	Name:	Signature:	Date:
Witnessed By : (Name of)	Name:	Signature:	Date:

Gammon

CTA INTERNATIONAL AS

Air Purification System – HV Power Supply Units Test & Commissioning Report			
Contract No.:	HY/2019/13	RISC No.:	36849 A.
Project:	Central Kowloon Route - Buildings, Electrical and Mechanical	Date:	14/08/2025
Location:	~~YVB~~ / HVB / ~~KVB~~	Room Name:	
T&C Plan Ref. No:	J3883-APS-S-I-17	Page:	
Ref. Dwg. No.:	J3883/MEP/APS/HVB/3203 & 3204		

Part 1 : Installation Inspection of ESP HV Power Supply Cabinets (Sheet 2 of 3)		
Items	**Description of Inspection**	**Test Result**
D) Visual Inspection for ESP HV Power Supply Units (TCP Section 4.3.3)		
a.	No visible damage to impair safety	(P) / F / NA
b.	Check that the ESP HV power supply units are securely fixed inside the Power Supply Cabinet with no physical damage, or signs of deterioration	(P) / F / NA
c.	Check and record the equipment ID, manufacturer, model number, serial number and other information, showing on the name plate for cabinet top cooling unit and ESP HV power supply units, and record it the initial installed location on the test form	(P) / F / NA
E) Visual Inspection for Accessories inside the Cabinet (TCP Section 4.3.4)		
a.	Check that the limit switch is securely fixed on rear door of the cabinet with proper cabling works	(P) / F / NA
Remark: P / F / NA = Pass / Fail / Not Applicable		
Comment:		

Test / Checked By : REW No.: W133567 Grade B+M (Name of CTA Representative)	Name: HO TUNG	Signature: Ho Tung	Date: 14/08/2025
Witnessed By : (Name of JEC Representative)	Name: John Chan	Signature:	Date: 14 AUG 2025
Witnessed By : (Name of)	Name: Raymond Lau	Signature:	Date: 14 AUG 2025
Witnessed By : (Name of AMMJV)	Name: Andy Tang	Signature:	Date: 14 AUG 2025
Witnessed By : (Name of)	Name:	Signature:	Date:
Witnessed By : (Name of)	Name:	Signature:	Date:

Gammon

CTA INTERNATIONAL AS

Air Purification System – HV Power Supply Units Test & Commissioning Report			
Contract No.:	HY/2019/13	RISC No.:	36849 A
Project:	Central Kowloon Route - Buildings, Electrical and Mechanical	Date:	14/08/2025
Location:	~~YVB~~ / HVB / ~~KVB~~	Room Name:	
T&C Plan Ref. No:	J3883-APS-S-I-17	Page:	
Ref. Dwg. No.:	J3883/MEP/APS/HVB/3203 & 3204		

Part 1 : Installation Inspection of ESP HV Power Supply Cabinets (Sheet 3A of 3)

F) Equipment List for HV Power Supply Cabinet (TCP Section 4.3.3)

Cabinets ID: H VB-APS 2 -ESP-PSC-0 1 **Main Switch Rating:** 80A

Location : ESP HV Switch Room 01 / 02 **Supply Fed From:** HVB-DB-ESP02-1

Item	Equipment ID / Description	Brand / Model No.		Serial No.	Check
1	19" Equipment Rack	Rittal		24244-02-15	☑
2	Top Cabinet Cooling Unit	Rittal	SK 3385.500	N/A	☑
3	H VB-APS 2 -PSU- 01 A Subassembly Ionizer 1	FUG	HCP 1600-20000 MOD	24244-01-141	☑
4	H VB-APS 2 -PSU- 02 A Subassembly Ionizer 2	FUG	HCP 1600-20000 MOD	24244-01-142	☑
5	H VB-APS 2 -PSU- 03 A Subassembly Ionizer 3	FUG	HCP 1600-20000 MOD	24244-01-143	☑
6	H VB-APS 2 -PSU- 04 A Subassembly Collector	FUG	HCP 1600-20000 MOD	24244-01-144	☑
7	H VB-APS 2 -PSU- 05 B Subassembly Ionizer 1	FUG	HCP 1600-20000 MOD	24244-01-145	☑
8	H VB-APS 2 -PSU- 06 B Subassembly Ionizer 2	FUG	HCP 1600-20000 MOD	24244-01-146	☑
9	H VB-APS 2 -PSU- 07 B Subassembly Ionizer 3	FUG	HCP 1600-20000 MOD	24244-01-147	☑
10	H VB-APS 2 -PSU- 08 B Subassembly Collector	FUG	HCP 1600-20000 MOD	24244-01-148	☑
11	H VB-APS 2 -PSU- 09 C Subassembly Ionizer 1	FUG	HCP 1600-20000 MOD	24244-01-149	☑
12	H VB-APS 2 -PSU- 10 C Subassembly Ionizer 2	FUG	HCP 1600-20000 MOD	24244-01-150	☑

Comment:

Test / Checked By : REW No.: W133567 Grade B+H (Name of CTA Representative)	Name: HO TUNG	Signature: Ho Tung	Date: 14/08/2025
Witnessed By : (Name of JEC Representative)	Name: John Chan	Signature:	Date: 14 AUG 2025
Witnessed By : (Name of GEL)	Name: Raymond Lau	Signature:	Date: 14 AUG 2025
Witnessed By : (Name of AMMJV)	Name: Andy Tang	Signature:	Date: 14 AUG 2025
Witnessed By : (Name of)	Name:	Signature:	Date:
Witnessed By : (Name of)	Name:	Signature:	Date:

Gammon

CTA INTERNATIONAL AS CLEAN TUNNEL AIR

Air Purification System – HV Power Supply Units Test & Commissioning Report			
Contract No.:	HY/2019/13	RISC No.:	36849 A
Project:	Central Kowloon Route - Buildings, Electrical and Mechanical	Date:	14/08/2025
Location:	~~YVB~~ / HVB / ~~KVB~~	Room Name:	
T&C Plan Ref. No:	J3883-APS-S-I-17	Page:	
Ref. Dwg. No.:	J3883/MEP/APS/HVB/3203 & 3204		

Part 1 : Installation Inspection of ESP HV Power Supply Cabinets (Sheet 3B of 3)

F) Equipment List for HV Power Supply Cabinet (TCP Section 4.3.3)

Cabinets ID: H VB-APS 2 -ESP-PSC-0 2	**Main Switch Rating:** 80A
Location : ESP HV Switch Room (01) / 02	**Supply Fed From:** HVB-DB-ESP02-2

Item	Equipment ID / Description	Brand / Model No.		Serial No.	Check
1	19" Equipment Rack	Rittal		24244-02-16	☑
2	Top Cabinet Cooling Unit	Rittal	SK 3385.500	N/A	☑
3	H VB-APS 2 -PSU- 11 C Subassembly Ionizer 3	FUG	HCP 1600-20000 MOD	24244-01-151	☑
4	H VB-APS 2 -PSU- 12 C Subassembly Collector	FUG	HCP 1600-20000 MOD	24244-01-152	☑
5	H VB-APS 2 -PSU- 13 D Subassembly Ionizer 1	FUG	HCP 1600-20000 MOD	24244-01-153	☑
6	H VB-APS 2 -PSU- 14 D Subassembly Ionizer 2	FUG	HCP 1600-20000 MOD	24244-01-154	☑
7	H VB-APS 2 -PSU- 15 D Subassembly Ionizer 3	FUG	HCP 1600-20000 MOD	24244-01-155	☑
8	H VB-APS 2 -PSU- 16 D Subassembly Collector	FUG	HCP 1600-20000 MOD	24244-01-156	☑
9	H VB-APS 2 -PSU- 17 E Subassembly Ionizer 1	FUG	HCP 1600-20000 MOD	24244-01-157	☑
10	H VB-APS 2 -PSU- 18 E Subassembly Ionizer 2	FUG	HCP 1600-20000 MOD	24244-01-158	☑
11	H VB-APS 2 -PSU- 19 E Subassembly Ionizer 3	FUG	HCP 1600-20000 MOD	24244-01-159	☑
12	H VB-APS 2 -PSU- 20 E Subassembly Collector	FUG	HCP 1600-20000 MOD	24244-01-160	☑

Comment:

Test / Checked By : REW No.: W133587 Grade B+M (Name of CTA Representative)	Name: HO TUNG	Signature: Ho Tung	Date: 14/08/2025
Witnessed By : (Name of JEC Representative)	Name: Ivan Chan	Signature:	Date: 14 AUG 2025
Witnessed By : (Name of)	Name: Raymond Lau	Signature:	Date: 14 AUG 2025
Witnessed By : (Name of AMMSV)	Name: Andy Tang	Signature: Andy Tang	Date: 14 AUG 2025
Witnessed By : (Name of)	Name:	Signature:	Date:
Witnessed By : (Name of)	Name:	Signature:	Date:

Gammon

CTA INTERNATIONAL AS CLEAN TUNNEL AIR

Air Purification System – HV Power Supply Units Test & Commissioning Report			
Contract No.:	HY/2019/13	RISC No.:	36852
Project:	Central Kowloon Route - Buildings, Electrical and Mechanical	Date:	17/09/2025
Location:	YVB / HVB / KVB	Room Name:	HV Room 1
T&C Plan Ref. No:		Page:	
Ref. Dwg. No.:			

Part 3: Inspection and Test for Electrical Installations (Sheet 2A of 5)

B) Earth Loop Impedance Test (TCP Section 4.5.3)

ESP HV Power Supply Cabinets Information

Cabinets ID:	HVB-APS2-ESP-PSC-01	Main Switch Rating:	80A
Location:	ESP HV Switch Room 01 / 02	Supply Fed From:	HVB-DB-ESP 02

Circuit No	Details of Equipment	Type of Protective Device	Rating	Earth Loop Impedance (Zs) (Ω)	Test Result
1	HVB-APS2-PSU-01 Subassembly I1	RCBO	16A SP	0.12	P / F / NA
2	HVB-APS2-PSU-02 Subassembly I2	RCBO	16A SP	0.14	P / F / NA
3	HVB-APS2-PSU-03 Subassembly I3	RCBO	16A SP	0.15	P / F / NA
4	HVB-APS2-PSU-04 Subassembly C	RCBO	16A SP	0.15	P / F / NA
5	HVB-APS2-PSU-05 Subassembly I1	RCBO	16A SP	0.14	P / F / NA
6	HVB-APS2-PSU-06 Subassembly I2	RCBO	16A SP	0.15	P / F / NA
7	HVB-APS2-PSU-07 Subassembly I3	RCBO	16A SP	0.17	P / F / NA
8	HVB-APS2-PSU-08 Subassembly C	RCBO	16A SP	0.14	P / F / NA
9	HVB-APS2-PSU-09 Subassembly I1	RCBO	16A SP	0.13	P / F / NA
10	HVB-APS2-PSU-10 Subassembly I2	RCBO	16A SP	0.16	P / F / NA

Remark: P / F / NA = Pass / Fail / Not Applicable
The Passing Criteria for the Max Earth Fault Loop Independence shall refer to EMSD COP.

Comment:

Test / Checked By : REW No.: W133567 Grade H (Name of CTA Representative)	Name: Ho Tung	Signature:	Date: 17/09/2025
Witnessed By : (Name of JEC Representative)	Name: John Chan	Signature:	Date: 17/09/2025
Witnessed By : (Name of GLL)	Name: Raymond Lam	Signature:	Date: 17/09/2025
Witnessed By : (Name of AMMJV)	Name: Patrick Yung	Signature:	Date: 17/09/2025
Witnessed By : (Name of)	Name:	Signature:	Date:
Witnessed By : (Name of)	Name:	Signature:	Date:

Gammon

CTA INTERNATIONAL AS CLEAN TUNNEL AIR

Air Purification System – HV Power Supply Units Test & Commissioning Report			
Contract No.:	HY/2019/13	RISC No.:	36852
Project:	Central Kowloon Route - Buildings, Electrical and Mechanical	Date:	17/09/2025
Location:	YVB / HVB / KVB	Room Name:	HV Room 1
T&C Plan Ref. No:		Page:	
Ref. Dwg. No.:			

Part 3: Inspection and Test for Electrical Installations (Sheet 2B of 5)

B) Earth Loop Impedance Test (TCP Section 4.5.3)

ESP HV Power Supply Cabinets Information

Cabinets ID:	HVB-APS2-ESP-PSC-02	Main Switch Rating:	80A
Location:	ESP HV Switch Room 01 / 02	Supply Fed From:	HVB-DB-ESP 02

Circuit No	Details of Equipment	Type of Protective Device	Rating	Earth Loop Impedance (Zs) (Ω)	Test Result
1	HVB-APS2-PSU-11 Subassembly I3	RCBO	16A SP	0.13	P / F / NA
2	HVB-APS2-PSU-12 Subassembly C	RCBO	16A SP	0.14	P / F / NA
3	HVB-APS2-PSU-13 Subassembly I1	RCBO	16A SP	0.14	P / F / NA
4	HVB-APS2-PSU-14 Subassembly I2	RCBO	16A SP	0.14	P / F / NA
5	HVB-APS2-PSU-15 Subassembly I3	RCBO	16A SP	0.14	P / F / NA
6	HVB-APS2-PSU-16 Subassembly C	RCBO	16A SP	0.14	P / F / NA
7	HVB-APS2-PSU-17 Subassembly I1	RCBO	16A SP	0.15	P / F / NA
8	HVB-APS2-PSU-18 Subassembly I2	RCBO	16A SP	0.14	P / F / NA
9	HVB-APS2-PSU-19 Subassembly I3	RCBO	16A SP	0.17	P / F / NA
10	HVB-APS2-PSU-20 Subassembly C	RCBO	16A SP	0.16	P / F / NA

Remark: P / F / NA = Pass / Fail / Not Applicable
The Passing Criteria for the Max Earth Fault Loop Independence shall refer to EMSD COP.

Comment:

Test / Checked By : REW No.: W133561 Grade H (Name of CTA Representative)	Name: Ho Tsz	Signature:	Date: 17/09/2025
Witnessed By : (Name of JEC Representative)	Name: John Chan	Signature:	Date: 17/09/2025
Witnessed By : (Name of GCL)	Name: Raymond Lam	Signature:	Date: 17/09/2025
Witnessed By : (Name of HMM IV)	Name: Patrick Yung	Signature:	Date: 17/09/2025
Witnessed By : (Name of)	Name:	Signature:	Date:
Witnessed By : (Name of)	Name:	Signature:	Date:

Gammon

CTA INTERNATIONAL AS CLEAN TUNNEL AIR

Air Purification System – HV Power Supply Units Test & Commissioning Report			
Contract No.:	HY/2019/13	RISC No.:	36852
Project:	Central Kowloon Route - Buildings, Electrical and Mechanical	Date:	17/09/2025
Location:	YVB / HVB / KVB	Room Name:	HV Room 1
T&C Plan Ref. No:		Page:	
Ref. Dwg. No.:			

Part 3: Inspection and Test for Electrical Installations (Sheet 3 of 5)

C) Functional Test of Residual Current Device (RCD) (TCP Section 4.5.3)

ESP HV Power Supply Cabinets Information

Cabinets ID:	H VB-APS2-ESP-PSC-01	Main Switch Rating:	80A
Location:	ESP HV Switch Room 01 / 02	Supply Fed From:	HVB-DB-ESP02

Circuit No. or Details of Equipment	Type of Protective Device	Rating	Polarity	RCD 50% (ms)	RCD 100% (ms)	Test Result
1	RCBO	16A SP	P / F / NA	P / F / NA	37	P / F / NA
2	RCBO	16A SP	P / F / NA	P / F / NA	36.5	P / F / NA
3	RCBO	16A SP	P / F / NA	P / F / NA	37.1	P / F / NA
4	RCBO	16A SP	P / F / NA	P / F / NA	26.6	P / F / NA
5	RCBO	16A SP	P / F / NA	P / F / NA	36.5	P / F / NA
6	RCBO	16A SP	P / F / NA	P / F / NA	36.2	P / F / NA
7	RCBO	16A SP	P / F / NA	P / F / NA	37.1	P / F / NA
8	RCBO	16A SP	P / F / NA	P / F / NA	36.8	P / F / NA
9	RCBO	16A SP	P / F / NA	P / F / NA	36.8	P / F / NA
10	RCBO	16A SP	P / F / NA	P / F / NA	26.7	P / F / NA

Remark: P / F / NA = Pass / Fail / Not Applicable
Tripping time of RCD for 30mA leakage current shall be within 300ms.

Comment:

	Name:	Signature:	Date:
Test / Checked By : REW No.: W133567 Grade H (Name of CTA Representative)	Ho Tung		17/09/2025
Witnessed By : (Name of JEC Representative)	John Chan		17/09/2025
Witnessed By : (Name of GCL)	Ryan Lam		17/09/2025
Witnessed By : (Name of AMMJV)	Patrick Yung		17/09/2025
Witnessed By : (Name of)			
Witnessed By : (Name of)			

Gammon

CTA INTERNATIONAL AS CLEAN TUNNEL AIR

Air Purification System – HV Power Supply Units Test & Commissioning Report			
Contract No.:	HY/2019/13	RISC No.:	36852
Project:	Central Kowloon Route - Buildings, Electrical and Mechanical	Date:	17/09/2025
Location:	YVB / HVB / KVB	Room Name:	HV Room 1
T&C Plan Ref. No:		Page:	
Ref. Dwg. No.:			

Part 3: Inspection and Test for Electrical Installations (Sheet 3 of 5)

C) Functional Test of Residual Current Device (RCD) (TCP Section 4.5.3)

ESP HV Power Supply Cabinets Information

Cabinets ID:	HVB-APS2-ESP-PSC-02	Main Switch Rating:	80A
Location:	ESP HV Switch Room 01 / 02	Supply Fed From:	~~HVB-APP~~ HVB-DB-ESP02

Circuit No. or Details of Equipment	Type of Protective Device	Rating	Polarity	RCD 50% (ms)	RCD 100% (ms)	Test Result
1	RCBO	16A SP	P / F / NA	P / F / NA	27	P / F / NA
2	RCBO	16A SP	P / F / NA	P / F / NA	26.9	P / F / NA
3	RCBO	16A SP	P / F / NA	P / F / NA	26.7	P / F / NA
4	RCBO	16A SP	P / F / NA	P / F / NA	26.5	P / F / NA
5	RCBO	16A SP	P / F / NA	P / F / NA	36.3	P / F / NA
6	RCBO	16A SP	P / F / NA	P / F / NA	26.8	P / F / NA
7	RCBO	16A SP	P / F / NA	P / F / NA	36.6	P / F / NA
8	RCBO	16A SP	P / F / NA	P / F / NA	36.9	P / F / NA
9	RCBO	16A SP	P / F / NA	P / F / NA	26.8	P / F / NA
10	RCBO	16A SP	P / F / NA	P / F / NA	26.2	P / F / NA

Remark: P / F / NA = Pass / Fail / Not Applicable
Tripping time of RCD for 30mA leakage current shall be within 300ms.

Comment:

Test / Checked By : REW No.: W137567 Grade H (Name of CTA Representative)	Name: Ho Tung	Signature:	Date: 17/09/2025
Witnessed By : (Name of JEC Representative)	Name: John Chan	Signature:	Date: 17/09/2025
Witnessed By : (Name of GCL)	Name: Raymond Lau	Signature:	Date: 17/09/2025
Witnessed By : (Name of AMMJV)	Name: Patrick Yung	Signature:	Date: 17/09/2025
Witnessed By : (Name of)	Name:	Signature:	Date:
Witnessed By : (Name of)	Name:	Signature:	Date:

Gammon

CTA INTERNATIONAL AS CLEAN TUNNEL AIR

Air Purification System – HV Power Supply Units Test & Commissioning Report			
Contract No.:	HY/2019/13	RISC No.:	36882
Project:	Central Kowloon Route - Buildings, Electrical and Mechanical	Date:	17/09/2025
Location:	YVB / ~~HVB~~ / KVB	Room Name:	HV Room 1
T&C Plan Ref. No:		Page:	
Ref. Dwg. No.:			

Part 3: Inspection and Test for Electrical Installations (Sheet 4 of 5)

D) Functional Test and Circuitry Check (TCP Section 4.5.3)

ESP HV Power Supply Cabinets Information

Cabinets ID:	HVB-APS2-ESP-PSC-01	Main Switch Rating:	80A
Location:	ESP HV Switch Room 01 / 02	Supply Fed From:	HVB-DB-ESP 02

Circuit No. or Details of Equipment	Type of Protective Device	Rating	Isolator	MCB	RCD Test Button	Circuitry Check
1	RCBO	16A SP	P / F / NA	P / F / NA	P / F / NA	P / F / NA
2	RCBO	16A SP	P / F / NA	P / F / NA	P / F / NA	P / F / NA
3	RCBO	16A SP	P / F / NA	P / F / NA	P / F / NA	P / F / NA
4	RCBO	16A SP	P / F / NA	P / F / NA	P / F / NA	P / F / NA
5	RCBO	16A SP	P / F / NA	P / F / NA	P / F / NA	P / F / NA
6	RCBO	16A SP	P / F / NA	P / F / NA	P / F / NA	P / F / NA
7	RCBO	16A SP	P / F / NA	P / F / NA	P / F / NA	P / F / NA
8	RCBO	16A SP	P / F / NA	P / F / NA	P / F / NA	P / F / NA
9	RCBO	16A SP	P / F / NA	P / F / NA	P / F / NA	P / F / NA
10	RCBO	16A SP	P / F / NA	P / F / NA	P / F / NA	P / F / NA
Air conditioner	RCBO	16A SP	P / F / NA	P / F / NA	P / F / NA	P / F / NA

Remark: P / F / NA = Pass / Fail / Not Applicable

Comment:

Test / Checked By : REW No.: W133567 Grade H (Name of CTA Representative)	Name: Ho Tung	Signature:	Date: 17/09/2025
Witnessed By : (Name of JEC Representative)	Name: John Chan	Signature:	Date: 17/09/2025
Witnessed By : (Name of GLL)	Name: Ryan Lam	Signature:	Date: 17/09/2025
Witnessed By : (Name of AMMJV)	Name: Patrick Yung	Signature:	Date: 17/09/2025
Witnessed By : (Name of)	Name:	Signature:	Date:
Witnessed By : (Name of)	Name:	Signature:	Date:

Gammon

CTA INTERNATIONAL AS CLEAN TUNNEL AIR

Air Purification System – HV Power Supply Units Test & Commissioning Report			
Contract No.:	HY/2019/13	RISC No.:	36852
Project:	Central Kowloon Route - Buildings, Electrical and Mechanical	Date:	17/09/2025
Location:	YVB / HVB / KVB	Room Name:	HV Room 1
T&C Plan Ref. No:		Page:	
Ref. Dwg. No.:			

Part 3: Inspection and Test for Electrical Installations (Sheet 4 of 5)

D) Functional Test and Circuitry Check (TCP Section 4.5.3)

ESP HV Power Supply Cabinets Information

Cabinets ID:	HVB-APS 2ESP-PSC-02	Main Switch Rating:	80A
Location:	ESP HV Switch Room 01 / 02	Supply Fed From:	HVB-DB-ESP 02

Circuit No. or Details of Equipment	Type of Protective Device	Rating	Isolator	MCB	RCD Test Button	Circuitry Check
1	RCBO	16A SP	P / F / NA	P / F / NA	P / F / NA	P / F / NA
2	RCBO	16A SP	P / F / NA	P / F / NA	P / F / NA	P / F / NA
3	RCBO	16A SP	P / F / NA	P / F / NA	P / F / NA	P / F / NA
4	RCBO	16A SP	P / F / NA	P / F / NA	P / F / NA	P / F / NA
5	RCBO	16A SP	P / F / NA	P / F / NA	P / F / NA	P / F / NA
6	RCBO	16A SP	P / F / NA	P / F / NA	P / F / NA	P / F / NA
7	RCBO	16A SP	P / F / NA	P / F / NA	P / F / NA	P / F / NA
8	RCBO	16A SP	P / F / NA	P / F / NA	P / F / NA	P / F / NA
9	RCBO	16A SP	P / F / NA	P / F / NA	P / F / NA	P / F / NA
10	RCBO	16A SP	P / F / NA	P / F / NA	P / F / NA	P / F / NA
Air conditioner	RCBO	16A SP	P / F / NA	P / F / NA	P / F / NA	P / F / NA

Remark: P / F / NA = Pass / Fail / Not Applicable

Comment:

Test / Checked By : REW No.: W133567 Grade H (Name of CTA Representative)	Name: Ho Tung	Signature:	Date: 17/09/2025
Witnessed By : (Name of JEC Representative)	Name: John Chan	Signature:	Date: 17/09/2025
Witnessed By : (Name of GCL)	Name: Roland Lam	Signature:	Date: 17/09/2025
Witnessed By : (Name of AMMTV)	Name: Patrick Yung	Signature:	Date: 17/09/2025
Witnessed By : (Name of)	Name:	Signature:	Date:
Witnessed By : (Name of)	Name:	Signature:	Date:

Gammon

CTA INTERNATIONAL AS CLEAN TUNNEL AIR

Air Purification System – HV Power Supply Units Test & Commissioning Report			
Contract No.:	HY/2019/13	RISC No.:	~~36855 A~~ ~~36849A (4)~~ 36851A (4)
Project:	Central Kowloon Route - Buildings, Electrical and Mechanical	Date:	14/08/2025
Location:	~~HVB~~ / HVB / ~~KVB~~	Room Name:	
T&C Plan Ref. No:	J3883-APS-S-I-17	Page:	
Ref. Dwg. No.:	J3883/MEP/APS/HVB/1603&1604&1605		

Part 2: Installation Inspection and Cable Tests for HV DC Cables (Sheet 1 of 2)

A) Visual Inspection (TCP Section 4.4.1)

Items	Description of Inspection	Test Result
a)	No visible damage to impair safety	(P) / F / NA
b)	Ensure all cables, HV connectors, cable glands & accessories are in good condition	(P) / F / NA
c)	All conductors are correctly and securely connected and identified, protected against mechanical damage, and adequately supported	(P) / F / NA

B) HV DC Cable Continuity Tests (TCP Section 4.4.2)

From: ESP HV Switch Room (01) / 02 To: APS Plenum No.01 / (02) / 03 Sub-assembly (A) / B / C / D / E

Items	Circuit No. or Details of Equipment	Cable Length (m)	Continuity Resistance (Ω) Measured	Calculated	Passing Criteria	Test Result
1	H VB-APS 2 -HVC- 01 Ionizer	39.5	0.79	0.395	0.968	(P) / F / NA
2	H VB-APS 2 -HVC- 02 Ionizer	39.5		0.395	0.968	(P) / F / NA
3	H VB-APS 2 -HVC- 03 Ionizer	38.5	0.77	0.385	0.943	(P) / F / NA
4	H VB-APS 2 -HVC- 04 Collector	38.5		0.385	0.943	(P) / F / NA

C) List of Testing Equipment / Instruments

Type	Model	Serial No	Calibration Cert. No	Date of Cert.
Digital Micro Ohmmeter	VT620C+	C242921984	ACZ202502220127	22/02/2025
Cable Fault Tester	LCT268-2(KM)	250219005	ACZ202503030802	22/02/2025

Remark: P / F / NA = Pass / Fail / Not Applicable
Insulation Resistance should be >1000MΩ, Continuity Resistance shall be < 0.0245Ω/m (B)

Comment: Calculation Formula = (Cable Length x Measured Resistance) / Total Cable Length
Passing Criteria = 0.0245*Cable Length

Test / Checked By : REW No.: W133567 Grade B+H (Name of CTA Representative)	Name: HO TUNG	Signature:	Date: 14/08/2025
Witnessed By : (Name of JEC Representative)	Name: John Chan	Signature:	Date: 14/08/2025
Witnessed By : (Name of GCL)	Name: Raymond Lau	Signature:	Date: 14/08/2025
Witnessed By : (Name of AMNTV)	Name: Andy Tang	Signature:	Date: 14/08/2025
Witnessed By : (Name of)	Name:	Signature:	Date:
Witnessed By : (Name of)	Name:	Signature:	Date:

Gammon

CTA INTERNATIONAL AS CLEAN TUNNEL AIR

Air Purification System – HV Power Supply Units Test & Commissioning Report			
Contract No.:	HY/2019/13	RISC No.:	~~36855A~~ ~~36849A(G)~~ 36851A(G)
Project:	Central Kowloon Route - Buildings, Electrical and Mechanical	Date:	14/08/2025
Location:	~~HVB~~ / HVB / ~~KVB~~	Room Name:	
T&C Plan Ref. No:	J3883-APS-S-I-17	Page:	
Ref. Dwg. No.:	J3883/MEP/APS/HVB/1603&1604&1605		

Part 2: Installation Inspection and Cable Tests for HV DC Cables (2 of 2)

D) Maximum Voltage Withstand Test for HV DC Cable (TCP Section 4.4.3)

Step 1 & 3 - Insulation Resistance Test before and after the Maximum Voltage Withstand Test

From:	ESP HV Switch Room (01) / 02	To:	APS Plenum No.01 / (02) / 03 Sub-assembly (A) / B / C / D / E

Items	Circuit No. or Details of Equipment	Cable Length (m)	Insulation Resistance (MΩ) before Step 2	Insulation Resistance (MΩ) after Step 2	Test Result
1	H VB-APS 2 -HVC- 01 Ionizer	39.5	220G	266G	(P) / F / NA
2	H VB-APS 2 -HVC- 02 Ionizer	39.5	250G	245G	(P) / F / NA
3	H VB-APS 2 -HVC- 03 Ionizer	38.5	245G	225G	(P) / F / NA
4	H VB-APS 2 -HVC- 04 Collector	38.5	244G	233G	(P) / F / NA

Step 2 - Maximum Voltage Withstand Test

Items	Circuit No. or Details of Equipment	Test Voltage (kV DC)	Duration (Min)	Measured Voltage
1	H VB-APS 2 -HVC- 01 Ionizer	20	1	20.2 kV
2	H VB-APS 2 -HVC- 02 Ionizer	20	1	20.2 kV
3	H VB-APS 2 -HVC- 03 Ionizer	20	1	20.2 kV
4	H VB-APS 2 -HVC- 04 Collector	20	1	20.2 kV

E) List of Testing Equipment / Instruments

Type	Model	Serial No	Calibration Cert. No	Date of Cert.
HV Insulation Tester	AR3125	6819355	KSZ250212780001	26/02/2025
HV DC Voltage Meter	HVP-40DM	20240071	ACZ2202505030801	03/03/2025

Remark: P / F / NA = Pass / Fail / Not Applicable,
The passing criteria for the test is passing the insulation test after for maximum voltage withstand test.
The insulation resistance is over 1000MOhm (*) for HV DC Cable and 30MOhm for ESP Cell

Comment:

Test / Checked By : REW No.: W133567 Grade B+H (Name of CTA Representative)	Name: HO TUNG	Signature:	Date: 14/08/2025
Witnessed By : (Name of JEC Representative)	Name: John Chan	Signature:	Date: 14/08/2025
Witnessed By : (Name of GCL)	Name: Raymond Lau	Signature:	Date: 14/08/2025
Witnessed By : (Name of AMMJV)	Name: Andy Tang	Signature:	Date: 14/08/2025
Witnessed By : (Name of)	Name:	Signature:	Date:
Witnessed By : (Name of)	Name:	Signature:	Date:

Gammon

CTA INTERNATIONAL AS

Air Purification System – HV Power Supply Units Test & Commissioning Report			
Contract No.:	HY/2019/13	RISC No.:	~~36855 A~~ ~~36844A(4)~~ 36851A(4)
Project:	Central Kowloon Route - Buildings, Electrical and Mechanical	Date:	14/08/2025
Location:	~~VVB~~ / HVB / ~~KVB~~	Room Name:	
T&C Plan Ref. No:	J3883-APS-S-I-17	Page:	
Ref. Dwg. No.:	J3883/MEP/APS/HVB/1603&1604&1605		

Part 2: Installation Inspection and Cable Tests for HV DC Cables (Sheet 1 of 2)

A) Visual Inspection (TCP Section 4.4.1)

Items	Description of Inspection	Test Result
a)	No visible damage to impair safety	(P) / F / NA
b)	Ensure all cables, HV connectors, cable glands & accessories are in good condition	(P) / F / NA
c)	All conductors are correctly and securely connected and identified, protected against mechanical damage, and adequately supported	(P) / F / NA

B) HV DC Cable Continuity Tests (TCP Section 4.4.2)

From: ESP HV Switch Room (01) / 02 To: APS Plenum No.01 / (02) / 03 Sub-assembly A / (B) / C / D / E

Items	Circuit No. or Details of Equipment	Cable Length (m)	Continuity Resistance (Ω) Measured	Calculated	Passing Criteria	Test Result
1	H VB-APS 2 -HVC- 05 Ionizer	37.5	0.75	0.375	0.919	(P) / F / NA
2	H VB-APS 2 -HVC- 06 Ionizer	37.5		0.375	0.919	(P) / F / NA
3	H VB-APS 2 -HVC- 07 Ionizer	36.5	0.74	0.37	0.894	(P) / F / NA
4	H VB-APS 2 -HVC- 08 Collector	36.5		0.37	0.894	(P) / F / NA

C) List of Testing Equipment / Instruments

Type	Model	Serial No	Calibration Cert. No	Date of Cert.
Digital Micro Ohmmeter	VT620C+	C242921984	ACZ202502220127	22/02/2025
Cable Fault Tester	LCT268-2(KM)	250219005	ACZ202503030802	22/02/2025

Remark: P / F / NA = Pass / Fail / Not Applicable
Insulation Resistance should be >1000MΩ, Continuity Resistance shall be < 0.0245Ω/m (B)

Comment: Calculation Formula = (Cable Length x Measured Resistance) / Total Cable Length
Passing Criteria = 0.0245*Cable Length

Test / Checked By : REW No.: W133587 Grade B+H (Name of CTA Representative)	Name: HO TUNG	Signature:	Date: 14/08/2025
Witnessed By : (Name of JEC Representative)	Name: John Chan	Signature:	Date: 14/08/2025
Witnessed By : (Name of GCL)	Name: Raymond Lau	Signature:	Date: 14/08/2025
Witnessed By : (Name of AMADV)	Name: Andy Tang	Signature:	Date: 14/08/2025
Witnessed By : (Name of)	Name:	Signature:	Date:
Witnessed By : (Name of)	Name:	Signature:	Date:

Gammon

CTA INTERNATIONAL AS CLEAN TUNNEL AIR

Air Purification System – HV Power Supply Units Test & Commissioning Report			
Contract No.:	HY/2019/13	RISC No.:	~~36855A~~ ~~36849A~~ 36851A
Project:	Central Kowloon Route - Buildings, Electrical and Mechanical	Date:	14/08/2025
Location:	~~JVB~~ / HVB / ~~KVB~~	Room Name:	
T&C Plan Ref. No:	J3883-APS-S-I-17	Page:	
Ref. Dwg. No.:	J3883/MEP/APS/HVB/1603&1604&1605		

Part 2: Installation Inspection and Cable Tests for HV DC Cables (2 of 2)

D) Maximum Voltage Withstand Test for HV DC Cable (TCP Section 4.4.3)

Step 1 & 3 - Insulation Resistance Test before and after the Maximum Voltage Withstand Test

From:	ESP HV Switch Room 01 / 02	To:	APS Plenum No.01 / 02 / 03 Sub-assembly A / B / C / D / E

Items	Circuit No. or Details of Equipment	Cable Length (m)	Insulation Resistance (MΩ) before Step 2	Insulation Resistance (MΩ) after Step 2	Test Result
1	H VB-APS 2 -HVC- 05 Ionizer	37.5	243G	235G	P / F / NA
2	H VB-APS 2 -HVC- 06 Ionizer	37.5	245G	214G	P / F / NA
3	H VB-APS 2 -HVC- 07 Ionizer	36.5	234G	235G	P / F / NA
4	H VB-APS 2 -HVC- 08 Collector	36.5	224G	235G	P / F / NA

Step 2 - Maximum Voltage Withstand Test

Items	Circuit No. or Details of Equipment	Test Voltage (kV DC)	Duration (Min)	Measured Voltage
1	H VB-APS 2 -HVC- 01 Ionizer	20	1	20.2 kV
2	H VB-APS 2 -HVC- 02 Ionizer	20	1	20.2 kV
3	H VB-APS 2 -HVC- 03 Ionizer	20	1	20.2 kV
4	H VB-APS 2 -HVC- 04 Collector	20	1	20.2 kV

E) List of Testing Equipment / Instruments

Type	Model	Serial No	Calibration Cert. No	Date of Cert.
HV Insulation Tester	AR3125	6819355	KSZ250212780001	26/02/2025
HV DC Voltage Meter	HVP-40DM	20240071	ACZ2202505030801	03/03/2025

Remark: P / F / NA = Pass / Fail / Not Applicable,
The passing criteria for the test is passing the insulation test after for maximum voltage withstand test.
The insulation resistance is over 1000MOhm (*) for HV DC Cable and 30MOhm for ESP Cell

Comment:

	Name:	Signature:	Date:
Test / Checked By : REW No.: W133567 Grade 3+14 (Name of CTA Representative)	HO TUNG		14/08/2025
Witnessed By : (Name of JEC Representative)	John Chan		14/08/2025
Witnessed By : (Name of GCL)	Raymond Lau		14/08/2025
Witnessed By : (Name of AMNJV)	Andy Tang		14/08/2025
Witnessed By : (Name of)			
Witnessed By : (Name of)			

Gammon

CTA INTERNATIONAL AS CLEAN TUNNEL AIR

Air Purification System – HV Power Supply Units Test & Commissioning Report			
Contract No.:	HY/2019/13	RISC No.:	~~36855 A~~ ~~36849A~~ (4) 36851A (4)
Project:	Central Kowloon Route - Buildings, Electrical and Mechanical	Date:	14/08/2025
Location:	~~YVB~~ / HVB / ~~KVB~~	Room Name:	
T&C Plan Ref. No:	J3883-APS-S-I-17	Page:	
Ref. Dwg. No.:	J3883/MEP/APS/HVB/1603&1604&1605		

Part 2: Installation Inspection and Cable Tests for HV DC Cables (Sheet 1 of 2)

A) Visual Inspection (TCP Section 4.4.1)

Items	Description of Inspection	Test Result
a)	No visible damage to impair safety	(P) / F / NA
b)	Ensure all cables, HV connectors, cable glands & accessories are in good condition	(P) / F / NA
c)	All conductors are correctly and securely connected and identified, protected against mechanical damage, and adequately supported	(P) / F / NA

B) HV DC Cable Continuity Tests (TCP Section 4.4.2)

From: ESP HV Switch Room (01) / 02 To: APS Plenum No.01 / (02) / 03 Sub-assembly A / B / (C) / D / E

Items	Circuit No. or Details of Equipment	Cable Length (m)	Continuity Resistance (Ω) Measured	Calculated	Passing Criteria	Test Result
1	H VB-APS 2 -HVC- 09 Ionizer	35.5	0.72	0.36	0.87	(P) / F / NA
2	H VB-APS 2 -HVC- 10 Ionizer	35.5		0.36	0.87	(P) / F / NA
3	H VB-APS 2 -HVC- 11 Ionizer	34.5	0.70	0.33	0.845	(P) / F / NA
4	H VB-APS 2 -HVC- 12 Collector	34.5		0.33	0.845	(P) / F / NA

C) List of Testing Equipment / Instruments

Type	Model	Serial No	Calibration Cert. No	Date of Cert.
Digital Micro Ohmmeter	VT620C+	C242921984	ACZ202502220127	22/02/2025
Cable Fault Tester	LCT268-2(KM)	250219005	ACZ202503030802	22/02/2025

Remark: P / F / NA = Pass / Fail / Not Applicable
Insulation Resistance should be >1000MΩ, Continuity Resistance shall be < 0.0245Ω/m (B)

Comment: Calculation Formula = (Cable Length x Measured Resistance) / Total Cable Length
Passing Criteria = 0.0245*Cable Length

Test / Checked By : REW No.: W133567 Grade B+M (Name of CTA Representative)	Name: HO TUNG	Signature:	Date: 14/08/2025
Witnessed By : (Name of JEC Representative)	Name: John Chan	Signature:	Date: 14/08/2025
Witnessed By : (Name of GCL)	Name: Raymond Lau	Signature:	Date: 14/08/2025
Witnessed By : (Name of AMMJV)	Name: Andy Tang	Signature:	Date: 14/08/2025
Witnessed By : (Name of)	Name:	Signature:	Date:
Witnessed By : (Name of)	Name:	Signature:	Date:

Gammon

CTA INTERNATIONAL AS CLEAN TUNNEL AIR

Air Purification System – HV Power Supply Units Test & Commissioning Report			
Contract No.:	HY/2019/13	RISC No.:	~~36855A~~ ~~36849A~~ 36851A
Project:	Central Kowloon Route - Buildings, Electrical and Mechanical	Date:	14/08/2025
Location:	~~HVB~~ / HVB / ~~KVB~~	Room Name:	
T&C Plan Ref. No:	J3883-APS-S-I-17	Page:	
Ref. Dwg. No.:	J3883/MEP/APS/HVB/1603&1604&1605		

Part 2: Installation Inspection and Cable Tests for HV DC Cables (2 of 2)

D) Maximum Voltage Withstand Test for HV DC Cable (TCP Section 4.4.3)

Step 1 & 3 - Insulation Resistance Test before and after the Maximum Voltage Withstand Test

From:	ESP HV Switch Room 01 / 02	To:	APS Plenum No.01 / 02 / 03 Sub-assembly A / B / C / D / E

Items	Circuit No. or Details of Equipment	Cable Length (m)	Insulation Resistance (MΩ) before Step 2	Insulation Resistance (MΩ) after Step 2	Test Result
1	H VB-APS 2 -HVC- 09 Ionizer	35.5	230G	215G	P / F / NA
2	H VB-APS 2 -HVC- 10 Ionizer	35.5	255G	225G	P / F / NA
3	H VB-APS 2 -HVC- 11 Ionizer	34.5	224G	256G	P / F / NA
4	H VB-APS 2 -HVC- 12 Collector	34.5	265G	224G	P / F / NA

Step 2 - Maximum Voltage Withstand Test

Items	Circuit No. or Details of Equipment	Test Voltage (kV DC)	Duration (Min)	Measured Voltage
1	H VB-APS 2 -HVC- 09 Ionizer	20	1	20.2 kV
2	H VB-APS 2 -HVC- 10 Ionizer	20	1	20.2 kV
3	H VB-APS 2 -HVC- 11 Ionizer	20	1	20.2 kV
4	H VB-APS 2 -HVC- 12 Collector	20	1	20.2 kV

E) List of Testing Equipment / Instruments

Type	Model	Serial No	Calibration Cert. No	Date of Cert.
HV Insulation Tester	AR3125	6819355	KSZ250212780001	26/02/2025
HV DC Voltage Meter	HVP-40DM	20240071	ACZ2202505030801	03/03/2025

Remark: P / F / NA = Pass / Fail / Not Applicable,
The passing criteria for the test is passing the insulation test after for maximum voltage withstand test.
The insulation resistance is over 1000MOhm (*) for HV DC Cable and 30MOhm for ESP Cell

Comment:

Test / Checked By : REW No.: W133567 Grade B+H (Name of CTA Representative)	Name: HO TUNG	Signature:	Date: 14/08/2025
Witnessed By : (Name of JEC Representative)	Name: John Chan	Signature:	Date: 14/08/2025
Witnessed By : (Name of GCL)	Name: Raymond Lau	Signature:	Date: 14/08/2025
Witnessed By : (Name of AMMJV)	Name: Andy Tang	Signature:	Date: 14/08/2025
Witnessed By : (Name of)	Name:	Signature:	Date:
Witnessed By : (Name of)	Name:	Signature:	Date:

Gammon

CTA INTERNATIONAL AS

Air Purification System – HV Power Supply Units Test & Commissioning Report			
Contract No.:	HY/2019/13	RISC No.:	~~36855 A~~ ~~36849A (A)~~ 36851A (A)
Project:	Central Kowloon Route - Buildings, Electrical and Mechanical	Date:	14/08/2025
Location:	~~YVB~~ / HVB / ~~KVB~~	Room Name:	
T&C Plan Ref. No:	J3883-APS-S-I-17	Page:	
Ref. Dwg. No.:	J3883/MEP/APS/HVB/1603&1604&1605		

Part 2: Installation Inspection and Cable Tests for HV DC Cables (Sheet 1 of 2)

A) Visual Inspection (TCP Section 4.4.1)

Items	Description of Inspection	Test Result
a)	No visible damage to impair safety	(P) / F / NA
b)	Ensure all cables, HV connectors, cable glands & accessories are in good condition	(P) / F / NA
c)	All conductors are correctly and securely connected and identified, protected against mechanical damage, and adequately supported	(P) / F / NA

B) HV DC Cable Continuity Tests (TCP Section 4.4.2)

From: ESP HV Switch Room (01) / 02 To: APS Plenum No.01 / (02) / 03 Sub-assembly A / B / C / (D) / E

Items	Circuit No. or Details of Equipment	Cable Length (m)	Continuity Resistance (Ω) Measured	Calculated	Passing Criteria	Test Result
1	H VB-APS 2 -HVC- 13 Ionizer	30.5	0.64	0.32	0.747	(P) / F / NA
2	H VB-APS 2 -HVC- 14 Ionizer	30.5		0.32	0.747	(P) / F / NA
3	H VB-APS 2 -HVC- 15 Ionizer	29.5	0.62	0.31	0.723	(P) / F / NA
4	H VB-APS 2 -HVC- 16 Collector	29.5		0.31	0.723	(P) / F / NA

C) List of Testing Equipment / Instruments

Type	Model	Serial No	Calibration Cert. No	Date of Cert.
Digital Micro Ohmmeter	VT620C+	C242921984	ACZ202502220127	22/02/2025
Cable Fault Tester	LCT268-2(KM)	250219005	ACZ202503030802	22/02/2025

Remark: P / F / NA = Pass / Fail / Not Applicable
Insulation Resistance should be >1000MΩ, Continuity Resistance shall be < 0.0245Ω/m (B)

Comment: Calculation Formula = (Cable Length x Measured Resistance) / Total Cable Length
Passing Criteria = 0.0245*Cable Length

Test / Checked By : REW No.: W133567 Grade B+M (Name of CTA Representative)	Name: HO TUNG	Signature:	Date: 14/08/2025
Witnessed By : (Name of JEC Representative)	Name: John Chan	Signature:	Date: 14/08/2025
Witnessed By : (Name of GCL)	Name: Raymond Lau	Signature:	Date: 14/08/2025
Witnessed By : (Name of AMMJV)	Name: Andy Tang	Signature:	Date: 14/08/2025
Witnessed By : (Name of)	Name:	Signature:	Date:
Witnessed By : (Name of)	Name:	Signature:	Date:

Gammon

CTA INTERNATIONAL AS CLEAN TUNNEL AIR

Air Purification System – HV Power Supply Units Test & Commissioning Report			
Contract No.:	HY/2019/13	RISC No.:	~~36855A~~ ~~36849A~~ (*) 36851A (*)
Project:	Central Kowloon Route - Buildings, Electrical and Mechanical	Date:	14/08/2025
Location:	~~YVB~~ / HVB / ~~KVB~~	Room Name:	
T&C Plan Ref. No:	J3883-APS-S-I-17	Page:	
Ref. Dwg. No.:	J3883/MEP/APS/HVB/1603&1604&1605		

Part 2: Installation Inspection and Cable Tests for HV DC Cables (2 of 2)

D) Maximum Voltage Withstand Test for HV DC Cable (TCP Section 4.4.3)

Step 1 & 3 - Insulation Resistance Test before and after the Maximum Voltage Withstand Test

From:	ESP HV Switch Room (01) / 02	To:	APS Plenum No.01 / (02) / 03 Sub-assembly A / B / C / (D) / E

Items	Circuit No. or Details of Equipment	Cable Length (m)	Insulation Resistance (MΩ) before Step 2	Insulation Resistance (MΩ) after Step 2	Test Result
1	H VB-APS 2 -HVC- 13 Ionizer	30.5	235G	266G	(P) / F / NA
2	H VB-APS 2 -HVC- 14 Ionizer	30.5	232G	253G	(P) / F / NA
3	H VB-APS 2 -HVC- 15 Ionizer	29.5	252G	267G	(P) / F / NA
4	H VB-APS 2 -HVC- 16 Collector	29.5	238G	247G	(P) / F / NA

Step 2 - Maximum Voltage Withstand Test

Items	Circuit No. or Details of Equipment	Test Voltage (kV DC)	Duration (Min)	Measured Voltage
1	H VB-APS 2 -HVC- 13 Ionizer	20	1	20.2 kV
2	H VB-APS 2 -HVC- 14 Ionizer	20	1	20.2 kV
3	H VB-APS 2 -HVC- 15 Ionizer	20	1	20.2 kV
4	H VB-APS 2 -HVC- 16 Collector	20	1	20.2 kV

E) List of Testing Equipment / Instruments

Type	Model	Serial No	Calibration Cert. No	Date of Cert.
HV Insulation Tester	AR3125	6819355	KSZ250212780001	26/02/2025
HV DC Voltage Meter	HVP-40DM	20240071	ACZ2202505030801	03/03/2025

Remark: P / F / NA = Pass / Fail / Not Applicable,
The passing criteria for the test is passing the insulation test after for maximum voltage withstand test.
The insulation resistance is over 1000MOhm (*) for HV DC Cable and 30MOhm for ESP Cell

Comment:

Test / Checked By : REW No.: W133567 Grade B+H (Name of CTA Representative)	Name: HO TUNG	Signature:	Date: 14/08/2025
Witnessed By : (Name of JEC Representative)	Name: John Chan	Signature:	Date: 14/08/2025
Witnessed By : (Name of GCL)	Name: Raymond Lau	Signature:	Date: 14/08/2025
Witnessed By : (Name of AMMJV)	Name: Andy Tang	Signature:	Date: 14/08/2025
Witnessed By : (Name of)	Name:	Signature:	Date:
Witnessed By : (Name of)	Name:	Signature:	Date:

Gammon

CTA INTERNATIONAL AS CLEAN TUNNEL AIR

Air Purification System – HV Power Supply Units Test & Commissioning Report			
Contract No.:	HY/2019/13	RISC No.:	~~36855 H~~ ~~36849A (4)~~ 36851A (4)
Project:	Central Kowloon Route - Buildings, Electrical and Mechanical	Date:	14/08/2025
Location:	~~YVB~~ / HVB / ~~KVB~~	Room Name:	
T&C Plan Ref. No:	J3883-APS-S-I-17	Page:	
Ref. Dwg. No.:	J3883/MEP/APS/HVB/1603&1604&1605		

Part 2: Installation Inspection and Cable Tests for HV DC Cables (Sheet 1 of 2)

A) Visual Inspection (TCP Section 4.4.1)

Items	Description of Inspection	Test Result
a)	No visible damage to impair safety	(P) / F / NA
b)	Ensure all cables, HV connectors, cable glands & accessories are in good condition	(P) / F / NA
c)	All conductors are correctly and securely connected and identified, protected against mechanical damage, and adequately supported	(P) / F / NA

B) HV DC Cable Continuity Tests (TCP Section 4.4.2)

From: ESP HV Switch Room (01) / 02 To: APS Plenum No.01 / (02) / 03 Sub-assembly A / B / C / D / (E)

Items	Circuit No. or Details of Equipment	Cable Length (m)	Continuity Resistance (Ω) Measured	Calculated	Passing Criteria	Test Result
1	H VB-APS 2 -HVC- 17 Ionizer	28.5	0.60	0.30	0.698	(P) / F / NA
2	H VB-APS 2 -HVC- 18 Ionizer	28.5		0.30	0.698	(P) / F / NA
3	H VB-APS 2 -HVC- 19 Ionizer	27.5	0.58	0.29	0.674	(P) / F / NA
4	H VB-APS 2 -HVC- 20 Collector	27.5		0.29	0.674	(P) / F / NA

C) List of Testing Equipment / Instruments

Type	Model	Serial No	Calibration Cert. No	Date of Cert.
Digital Micro Ohmmeter	VT620C+	C242921984	ACZ202502220127	22/02/2025
Cable Fault Tester	LCT268-2(KM)	250219005	ACZ202503030802	22/02/2025

Remark: P / F / NA = Pass / Fail / Not Applicable
Insulation Resistance should be >1000MΩ, Continuity Resistance shall be < 0.0245Ω/m (B)

Comment: Calculation Formula = (Cable Length x Measured Resistance) / Total Cable Length
Passing Criteria = 0.0245*Cable Length

Test / Checked By : REW No.: W133567 Grade B+H (Name of CTA Representative)	Name: HO TUNG	Signature:	Date: 14/08/2025
Witnessed By : (Name of JEC Representative)	Name: John Chan	Signature:	Date: 14/08/2025
Witnessed By : (Name of GCL)	Name: Raymond Lau	Signature:	Date: 14/08/2025
Witnessed By : (Name of AMMJV)	Name: Andy Tang	Signature: Andy Tang	Date: 14/08/2025
Witnessed By : (Name of)	Name:	Signature:	Date:
Witnessed By : (Name of)	Name:	Signature:	Date:

Gammon

CTA INTERNATIONAL AS CLEAN TUNNEL AIR

Air Purification System – HV Power Supply Units Test & Commissioning Report			
Contract No.:	HY/2019/13	RISC No.:	~~36855A~~ ~~36849A~~ 36851A
Project:	Central Kowloon Route - Buildings, Electrical and Mechanical	Date:	14/08/2025
Location:	~~HVB~~ / HVB / ~~KVB~~	Room Name:	
T&C Plan Ref. No:	J3883-APS-S-I-17	Page:	
Ref. Dwg. No.:	J3883/MEP/APS/HVB/1603&1604&1605		

Part 2: Installation Inspection and Cable Tests for HV DC Cables (2 of 2)

D) Maximum Voltage Withstand Test for HV DC Cable (TCP Section 4.4.3)

Step 1 & 3 - Insulation Resistance Test before and after the Maximum Voltage Withstand Test

From:	ESP HV Switch Room 01 / 02	To:	APS Plenum No.01 / 02 / 03 Sub-assembly A / B / C / D / E

Items	Circuit No. or Details of Equipment	Cable Length (m)	Insulation Resistance (MΩ) before Step 2	Insulation Resistance (MΩ) after Step 2	Test Result
1	H VB-APS 2 -HVC- 17 Ionizer	28.5	254G	239G	P / F / NA
2	H VB-APS 2 -HVC- 18 Ionizer	28.5	237G	234G	P / F / NA
3	H VB-APS 2 -HVC- 19 Ionizer	27.5	293G	255G	P / F / NA
4	H VB-APS 2 -HVC- 20 Collector	27.5	234G	267G	P / F / NA

Step 2 - Maximum Voltage Withstand Test

Items	Circuit No. or Details of Equipment	Test Voltage (kV DC)	Duration (Min)	Measured Voltage
1	H VB-APS 2 -HVC- 17 Ionizer	20	1	20.2 kV
2	H VB-APS 2 -HVC- 18 Ionizer	20	1	20.2 kV
3	H VB-APS 2 -HVC- 19 Ionizer	20	1	20.2 kV
4	H VB-APS 2 -HVC- 20 Collector	20	1	20.2 kV

E) List of Testing Equipment / Instruments

Type	Model	Serial No	Calibration Cert. No	Date of Cert.
HV Insulation Tester	AR3125	6819355	KSZ250212780001	26/02/2025
HV DC Voltage Meter	HVP-40DM	20240071	ACZ2202505030801	03/03/2025

Remark: P / F / NA = Pass / Fail / Not Applicable,
The passing criteria for the test is passing the insulation test after for maximum voltage withstand test.
The insulation resistance is over 1000MOhm (*) for HV DC Cable and 30MOhm for ESP Cell

Comment:

	Name:	Signature:	Date:
Test / Checked By : REW No.: W133587 Grade B+H (Name of CTA Representative)	HO TUNG		14/08/2025
Witnessed By : (Name of JEC Representative)	John Chan		14/08/2025
Witnessed By : (Name of GCL)	Raymond Lau		14/08/2025
Witnessed By : (Name of AMMJV)	Andy Tang		14/08/2025
Witnessed By : (Name of)			
Witnessed By : (Name of)			

Gammon

CTA INTERNATIONAL AS

Air Purification System – HV Power Supply Units Test & Commissioning Report			
Contract No.:	HY/2019/13	RISC No.:	36858 A
Project:	Central Kowloon Route - Buildings, Electrical and Mechanical	Date:	14/08/2025
Location:	~~YVB~~ / HVB / ~~KVB~~	Room Name:	
T&C Plan Ref. No:	J3883-APS-S-I-17	Page:	
Ref. Dwg. No.:	J3883/MEP/APS/HVB/1603&1604&1605		

Part 3: Inspection and Test for Electrical Installations (Sheet 1 of 5)

A) Continuity Test of ESP DC Earthing Conductor and 0V conductor (TCP Section 4.5.3)

Location: ESP HV Switch Room (01) / 02

Circuit No. or Details of Equipment	Continuity of Conductor (ohm)	Test Result
APS2-PSC-01 Main Earthing	0.1	(P) / F / NA
APS2-PSC-01 0V Earthing	0.1	(P) / F / NA
APS2-PSC-02 Main Earthing	0.1	(P) / F / NA
APS2-PSC-02 0V Earthing	0.1	(P) / F / NA
		P / F / NA
		P / F / NA
		P / F / NA
		P / F / NA
		P / F / NA
		P / F / NA
		P / F / NA

Remark: P / F / NA = Pass / Fail / Not Applicable
The Passing Criteria for Reading of Continuity test should be <1Ω

Comment:

Test / Checked By : REW No.: W133567 Grade B11 (Name of CTA Representative)	Name: HO TUNG	Signature: Ho Tung	Date: 14/08/2025
Witnessed By : (Name of JEC Representative)	Name: John Chan	Signature:	Date: 14/08/2025
Witnessed By : (Name of GCL)	Name: Boris Yan	Signature:	Date: 14/08/2025
Witnessed By : (Name of AMMTV)	Name: Andy Tang	Signature:	Date: 14/08/2025
Witnessed By : (Name of)	Name:	Signature:	Date:
Witnessed By : (Name of)	Name:	Signature:	Date:

Gammon

CTA INTERNATIONAL AS CLEAN TUNNEL AIR

Air Purification System – HV Power Supply Units Test & Commissioning Report			
Contract No.:	HY/2019/13	RISC No.:	36858A
Project:	Central Kowloon Route - Buildings, Electrical and Mechanical	Date:	14/08/2025
Location:	~~XVB~~ / HVB / ~~KVB~~	Room Name:	
T&C Plan Ref. No:	J3883-APS-S-I-17	Page:	
Ref. Dwg. No.:	J3883/MEP/APS/HVB/1603&1604&1605		

Part 3: Inspection and Test for Electrical Installations (Sheet 2A of 5)

B) Earth Loop Impedance Test (TCP Section 4.5.3)

ESP HV Power Supply Cabinets Information

Cabinets ID:	H VB-APS 2 -ESP-PSC-0 1	Main Switch Rating:	80A
Location:	ESP HV Switch Room (01) / 02	Supply Fed From:	HVB-DB-ESP02-1

Circuit No	Details of Equipment	Type of Protective Device	Rating	Earth Loop Impedance (Zs) (Ω)	Test Result
1	H VB-APS 2 -PSU- 01 A Subassembly Ionizer 1	RCBO	16A SP	0.13	Ⓟ/ F / NA
2	H VB-APS 2 -PSU- 02 A Subassembly Ionizer 2	RCBO	16A SP	0.14	Ⓟ/ F / NA
3	H VB-APS 2 -PSU- 03 A Subassembly Ionizer 3	RCBO	16A SP	0.12	Ⓟ/ F / NA
4	H VB-APS 2 -PSU- 04 A Subassembly Collector	RCBO	16A SP	0.14	Ⓟ/ F / NA
5	H VB-APS 2 -PSU- 05 B Subassembly Ionizer 1	RCBO	16A SP	0.14	Ⓟ/ F / NA
6	H VB-APS 2 -PSU- 06 B Subassembly Ionizer 2	RCBO	16A SP	0.12	Ⓟ/ F / NA
7	H VB-APS 2 -PSU- 07 B Subassembly Ionizer 3	RCBO	16A SP	0.13	Ⓟ/ F / NA
8	H VB-APS 2 -PSU- 08 B Subassembly Collector	RCBO	16A SP	0.12	Ⓟ/ F / NA
9	H VB-APS 2 -PSU- 09 C Subassembly Ionizer 1	RCBO	16A SP	0.13	Ⓟ/ F / NA
10	H VB-APS 2 -PSU- 10 C Subassembly Ionizer 2	RCBO	16A SP	0.12	Ⓟ/ F / NA

Remark: P / F / NA = Pass / Fail / Not Applicable
The Passing Criteria for the Max Earth Fault Loop Independence shall refer to EMSD COP.

Comment:

Test / Checked By : REW No.: W133587 Grade B+M (Name of CTA Representative)	Name: HO TUNG	Signature: Ho Tung	Date: 14/08/2025
Witnessed By : (Name of JEC Representative)	Name: John Chan	Signature:	Date: 14/08/2025
Witnessed By : (Name of GCL)	Name: Boris Yan	Signature:	Date: 14/08/2025
Witnessed By : (Name of AMMJV)	Name: Andy Tang	Signature: Ive Tang	Date: 14/08/2025
Witnessed By : (Name of)	Name:	Signature:	Date:
Witnessed By : (Name of)	Name:	Signature:	Date:

Gammon

CTA INTERNATIONAL AS CLEAN TUNNEL AIR

Air Purification System – HV Power Supply Units Test & Commissioning Report			
Contract No.:	HY/2019/13	RISC No.:	36858 A
Project:	Central Kowloon Route - Buildings, Electrical and Mechanical	Date:	14/08/2025
Location:	~~VVB~~ / HVB / ~~KVB~~	Room Name:	
T&C Plan Ref. No:	J3883-APS-S-I-17	Page:	
Ref. Dwg. No.:	J3883/MEP/APS/HVB/1603&1604&1605		

Part 3: Inspection and Test for Electrical Installations (Sheet 2A of 5)

B) Earth Loop Impedance Test (TCP Section 4.5.3)

ESP HV Power Supply Cabinets Information

Cabinets ID:	H VB-APS 2 -ESP-PSC-0 2	Main Switch Rating:	80A
Location:	ESP HV Switch Room (01) / 02	Supply Fed From:	HVB-DB-ESP02-2

Circuit No	Details of Equipment	Type of Protective Device	Rating	Earth Loop Impedance (Zs) (Ω)	Test Result
1	H VB-APS 2 -PSU- 11 C Subassembly Ionizer 3	RCBO	16A SP	0.15	(P) / F / NA
2	H VB-APS 2 -PSU- 12 C Subassembly Collector	RCBO	16A SP	0.13	(P) / F / NA
3	H VB-APS 2 -PSU- 13 D Subassembly Ionizer 1	RCBO	16A SP	0.12	(P) / F / NA
4	H VB-APS 2 -PSU- 14 D Subassembly Ionizer 2	RCBO	16A SP	0.13	(P) / F / NA
5	H VB-APS 2 -PSU- 15 D Subassembly Ionizer 3	RCBO	16A SP	0.14	(P) / F / NA
6	H VB-APS 2 -PSU- 16 D Subassembly Collector	RCBO	16A SP	0.13	(P) / F / NA
7	H VB-APS 2 -PSU- 17 E Subassembly Ionizer 1	RCBO	16A SP	0.14	(P) / F / NA
8	H VB-APS 2 -PSU- 18 E Subassembly Ionizer 2	RCBO	16A SP	0.12	(P) / F / NA
9	H VB-APS 2 -PSU- 19 E Subassembly Ionizer 3	RCBO	16A SP	0.13	(P) / F / NA
10	H VB-APS 2 -PSU- 20 E Subassembly Collector	RCBO	16A SP	0.12	(P) / F / NA

Remark: P / F / NA = Pass / Fail / Not Applicable
The Passing Criteria for the Max Earth Fault Loop Independence shall refer to EMSD COP.

Comment:

Test / Checked By : REW No.: W133587 Grade B+H (Name of CTA Representative)	Name: HO TUNG	Signature: Ho Tung	Date: 14/08/2025
Witnessed By : (Name of JEC Representative)	Name: John Chan	Signature:	Date: 14/08/2025
Witnessed By : (Name of GCL)	Name: Boris Yan	Signature:	Date: 14/08/2025
Witnessed By : (Name of AmMJV)	Name: Andy Tang	Signature:	Date: 14/08/2025
Witnessed By : (Name of)	Name:	Signature:	Date:
Witnessed By : (Name of)	Name:	Signature:	Date:

Gammon

CTA INTERNATIONAL AS

Air Purification System – HV Power Supply Units Test & Commissioning Report			
Contract No.:	HY/2019/13	RISC No.:	36858A
Project:	Central Kowloon Route - Buildings, Electrical and Mechanical	Date:	14/08/2025
Location:	~~VVB~~ / HVB / ~~KVB~~	Room Name:	
T&C Plan Ref. No:	J3883-APS-S-I-17	Page:	
Ref. Dwg. No.:	J3883/MEP/APS/HVB/1603&1604&1605		

Part 3: Inspection and Test for Electrical Installations (Sheet 3 of 5)

C) Functional Test of Residual Current Device (RCD) (TCP Section 4.5.3)

ESP HV Power Supply Cabinets Information

Cabinets ID:	H VB-APS 2 -ESP-PSC-0 1	Main Switch Rating:	80A
Location:	ESP HV Switch Room (01) / 02	Supply Fed From:	HVB-DB-ESP02-1

Circuit No. or Details of Equipment	Type of Protective Device	Rating	Polarity	RCD 50% (ms)	RCD 100% (ms)	Test Result
1	RCBO	16A SP	(P) / F / NA	(P) / F / NA	37.1	(P) / F / NA
2	RCBO	16A SP	(P) / F / NA	(P) / F / NA	27.3	(P) / F / NA
3	RCBO	16A SP	(P) / F / NA	(P) / F / NA	33.1	(P) / F / NA
4	RCBO	16A SP	(P) / F / NA	(P) / F / NA	37.3	(P) / F / NA
5	RCBO	16A SP	(P) / F / NA	(P) / F / NA	27.1	(P) / F / NA
6	RCBO	16A SP	(P) / F / NA	(P) / F / NA	37.1	(P) / F / NA
7	RCBO	16A SP	(P) / F / NA	(P) / F / NA	27.1	(P) / F / NA
8	RCBO	16A SP	(P) / F / NA	(P) / F / NA	35.1	(P) / F / NA
9	RCBO	16A SP	(P) / F / NA	(P) / F / NA	27.1	(P) / F / NA
10	RCBO	16A SP	(P) / F / NA	(P) / F / NA	32.1	(P) / F / NA

Remark: P / F / NA = Pass / Fail / Not Applicable
Tripping time of RCD for 30mA leakage current shall be within 300ms.

Comment:

Test / Checked By : REW No.: W133567 Grade B+H (Name of CTA Representative)	Name: HO TUNG	Signature: Ho Tung	Date: 14/08/2025
Witnessed By : (Name of JEC Representative)	Name: John Chan	Signature:	Date: 14/08/2025
Witnessed By : (Name of GCL)	Name: Boris Yan	Signature:	Date: 14/08/2025
Witnessed By : (Name of AmMJV)	Name: Andy Tang	Signature:	Date: 14/08/2025
Witnessed By : (Name of)	Name:	Signature:	Date:
Witnessed By : (Name of)	Name:	Signature:	Date:

Gammon

CTA INTERNATIONAL AS CLEAN TUNNEL AIR

Air Purification System – HV Power Supply Units Test & Commissioning Report			
Contract No.:	HY/2019/13	RISC No.:	36858 A
Project:	Central Kowloon Route - Buildings, Electrical and Mechanical	Date:	14/08/2025
Location:	~~YVB~~ / HVB / ~~KVB~~	Room Name:	
T&C Plan Ref. No:	J3883-APS-S-I-17	Page:	
Ref. Dwg. No.:	J3883/MEP/APS/HVB/1603&1604&1605		

Part 3: Inspection and Test for Electrical Installations (Sheet 3 of 5)

C) Functional Test of Residual Current Device (RCD) (TCP Section 4.5.3)

ESP HV Power Supply Cabinets Information

Cabinets ID:	H VB-APS 2 -ESP-PSC-0 2	Main Switch Rating:	80A
Location:	ESP HV Switch Room (01) / 02	Supply Fed From:	HVB-DB-ESP02-2

Circuit No. or Details of Equipment	Type of Protective Device	Rating	Polarity	RCD 50% (ms)	RCD 100% (ms)	Test Result
1	RCBO	16A SP	(P) / F / NA	(P) / F / NA	37.1	(P) / F / NA
2	RCBO	16A SP	(P) / F / NA	(P) / F / NA	37.3	(P) / F / NA
3	RCBO	16A SP	(P) / F / NA	(P) / F / NA	23.1	(P) / F / NA
4	RCBO	16A SP	(P) / F / NA	(P) / F / NA	28.5	(P) / F / NA
5	RCBO	16A SP	(P) / F / NA	(P) / F / NA	27.1	(P) / F / NA
6	RCBO	16A SP	(P) / F / NA	(P) / F / NA	27.4	(P) / F / NA
7	RCBO	16A SP	(P) / F / NA	(P) / F / NA	27.5	(P) / F / NA
8	RCBO	16A SP	(P) / F / NA	(P) / F / NA	34.5	(P) / F / NA
9	RCBO	16A SP	(P) / F / NA	(P) / F / NA	27.8	(P) / F / NA
10	RCBO	16A SP	(P) / F / NA	(P) / F / NA	32.1	(P) / F / NA

Remark: P / F / NA = Pass / Fail / Not Applicable
Tripping time of RCD for 30mA leakage current shall be within 300ms.

Comment:

Test / Checked By : REW No.: W133557 Grade B+M (Name of CTA Representative)	Name: HO TUNG	Signature: Ho Tung	Date: 14/08/2025
Witnessed By : (Name of JEC Representative)	Name: John Chan	Signature:	Date: 14/08/2025
Witnessed By : (Name of GCL)	Name: Boris Yan	Signature:	Date: 14/08/2025
Witnessed By : (Name of AMMJV)	Name: Andy Tang	Signature:	Date: 14/08/2025
Witnessed By : (Name of)	Name:	Signature:	Date:
Witnessed By : (Name of)	Name:	Signature:	Date:

Gammon

CIA INTERNATIONAL AS CLEAN TUNNEL AIR

Air Purification System – HV Power Supply Units Test & Commissioning Report			
Contract No.:	HY/2019/13	RISC No.:	36858A
Project:	Central Kowloon Route - Buildings, Electrical and Mechanical	Date:	14/08/2025
Location:	~~VVB~~ / HVB / ~~KVB~~	Room Name:	
T&C Plan Ref. No:	J3883-APS-S-I-17	Page:	
Ref. Dwg. No.:	J3883/MEP/APS/HVB/1603&1604&1605		

Part 3: Inspection and Test for Electrical Installations (Sheet 4 of 5)

D) Functional Test and Circuitry Check (TCP Section 4.5.3)

ESP HV Power Supply Cabinets Information

Cabinets ID:	H VB-APS 2 -ESP-PSC-0 1	Main Switch Rating:	80A
Location:	ESP HV Switch Room (01) / 02	Supply Fed From:	HVB-DB-ESP02-1

Circuit No. or Details of Equipment	Type of Protective Device	Rating	Isolator	MCB	RCD Test Button	Circuitry Check
1	RCBO	16A SP	P / F / (NA)	P / F / (NA)	(P) / F / NA	(P) / F / NA
2	RCBO	16A SP	P / F / (NA)	P / F / (NA)	(P) / F / NA	(P) / F / NA
3	RCBO	16A SP	P / F / (NA)	P / F / (NA)	(P) / F / NA	(P) / F / NA
4	RCBO	16A SP	P / F / (NA)	P / F / (NA)	(P) / F / NA	(P) / F / NA
5	RCBO	16A SP	P / F / (NA)	P / F / (NA)	(P) / F / NA	(P) / F / NA
6	RCBO	16A SP	P / F / (NA)	P / F / (NA)	(P) / F / NA	(P) / F / NA
7	RCBO	16A SP	P / F / (NA)	P / F / (NA)	(P) / F / NA	(P) / F / NA
8	RCBO	16A SP	P / F / (NA)	P / F / (NA)	(P) / F / NA	(P) / F / NA
9	RCBO	16A SP	P / F / (NA)	P / F / (NA)	(P) / F / NA	(P) / F / NA
10	RCBO	16A SP	P / F / (NA)	P / F / (NA)	(P) / F / NA	(P) / F / NA
A/C Unit	RCBO	16A SP	P / F / (NA)	P / F / (NA)	(P) / F / NA	(P) / F / NA

Remark: P / F / NA = Pass / Fail / Not Applicable

Comment:

Test / Checked By : REW No.: W133587 Grade B+H (Name of CTA Representative)	Name: HO TUNG	Signature: Ho Tung	Date: 14/08/2025
Witnessed By : (Name of JEC Representative)	Name: John Chan	Signature:	Date: 14/08/2025
Witnessed By : (Name of GCL)	Name: Boris Yan	Signature:	Date: 14/08/2025
Witnessed By : (Name of AMMJV)	Name: Andy Tang	Signature:	Date: 14/08/2025
Witnessed By : (Name of)	Name:	Signature:	Date:
Witnessed By : (Name of)	Name:	Signature:	Date:

Gammon

CTA INTERNATIONAL AS CLEAN TUNNEL AIR

Air Purification System – HV Power Supply Units Test & Commissioning Report			
Contract No.:	HY/2019/13	RISC No.:	36858A
Project:	Central Kowloon Route - Buildings, Electrical and Mechanical	Date:	14/08/2025
Location:	~~YVB~~ / HVB / ~~KVB~~	Room Name:	
T&C Plan Ref. No:	J3883-APS-S-I-17	Page:	
Ref. Dwg. No.:	J3883/MEP/APS/HVB/1603&1604&1605		

Part 3: Inspection and Test for Electrical Installations (Sheet 4 of 5)

D) Functional Test and Circuitry Check (TCP Section 4.5.3)

ESP HV Power Supply Cabinets Information

Cabinets ID:	H VB-APS 2 -ESP-PSC-0 2	Main Switch Rating:	80A
Location:	ESP HV Switch Room (01) / 02	Supply Fed From:	HVB-DB-ESP02-2

Circuit No. or Details of Equipment	Type of Protective Device	Rating	Isolator	MCB	RCD Test Button	Circuitry Check
1	RCBO	16A SP	P / F / (NA)	P / F / (NA)	(P) / F / NA	(P) / F / NA
2	RCBO	16A SP	P / F / (NA)	P / F / (NA)	(P) / F / NA	(P) / F / NA
3	RCBO	16A SP	P / F / (NA)	P / F / (NA)	(P) / F / NA	(P) / F / NA
4	RCBO	16A SP	P / F / (NA)	P / F / (NA)	(P) / F / NA	(P) / F / NA
5	RCBO	16A SP	P / F / (NA)	P / F / (NA)	(P) / F / NA	(P) / F / NA
6	RCBO	16A SP	P / F / (NA)	P / F / (NA)	(P) / F / NA	(P) / F / NA
7	RCBO	16A SP	P / F / (NA)	P / F / (NA)	(P) / F / NA	(P) / F / NA
8	RCBO	16A SP	P / F / (NA)	P / F / (NA)	(P) / F / NA	(P) / F / NA
9	RCBO	16A SP	P / F / (NA)	P / F / (NA)	(P) / F / NA	(P) / F / NA
10	RCBO	16A SP	P / F / (NA)	P / F / (NA)	(P) / F / NA	(P) / F / NA
A/C Unit	RCBO	16A SP	P / F / (NA)	P / F / (NA)	(P) / F / NA	(P) / F / NA

Remark: P / F / NA = Pass / Fail / Not Applicable

Comment:

Test / Checked By : REW No.: W133587 Grade B+/1 (Name of CTA Representative)	Name: HO TUNG	Signature: Ho Tung	Date: 14/08/2025
Witnessed By : (Name of JEC Representative)	Name: John Chan	Signature:	Date: 14/08/2025
Witnessed By : (Name of GCL)	Name: Boris Yan	Signature:	Date: 14/08/2025
Witnessed By : (Name of AmMJV)	Name: Andy Tang	Signature: Andy Tang	Date: 14/08/2025
Witnessed By : (Name of)	Name:	Signature:	Date:
Witnessed By : (Name of)	Name:	Signature:	Date:

Gammon

CTA INTERNATIONAL AS CLEAN TUNNEL AIR

Air Purification System – HV Power Supply Units Test & Commissioning Report			
Contract No.:	HY/2019/13	RISC No.:	36858 A
Project:	Central Kowloon Route - Buildings, Electrical and Mechanical	Date:	14/08/2025
Location:	~~XVB~~ / HVB / ~~KVB~~	Room Name:	
T&C Plan Ref. No:	J3883-APS-S-I-17	Page:	
Ref. Dwg. No.:	J3883/MEP/APS/HVB/1603&1604&1605		

Part 3: Inspection and Test for Electrical Installations (Sheet 5 of 5)

E) Bonding Continuity Test

	Equipment Description	Equipotential Bonding (Ω)	Supplementary Bonding (Ω)	Test Result
APS2-PSC-01	Main Earthing Terminal	0.1	N/A	(P) / F / NA
	Cabient Door	N/A	0.1	(P) / F / NA
	Trunking	N/A	0.1	(P) / F / NA
	Cable Tray	N/A	0.1	(P) / F / NA
	PSU case	N/A	0.1	(P) / F / NA
				P / F / NA
APS2-PSC-02	Main Earthing Terminal	0.1	N/A	(P) / F / NA
	Cabient Door	N/A	0.1	(P) / F / NA
	Trunking	N/A	0.1	(P) / F / NA
	Cable Tray	N/A	0.1	(P) / F / NA
	PSU case	N/A	0.1	(P) / F / NA
				P / F / NA
				P / F / NA
				P / F / NA
				P / F / NA

Remark: P / F / NA = Pass / Fail / Not Applicable
The Passing Criteria of the Reading of Continuity test should be <1Ω.

Comment:

	Name:	Signature:	Date:
Test / Checked By : REW No.: W135587 Grade B+/1 (Name of CTA Representative)	HO TUNG	Ho Tung	14/08/2025
Witnessed By : (Name of JEC Representative)	John Chan		14/08/2025
Witnessed By : (Name of GCL)	Boris Yan		14/08/2025
Witnessed By : (Name of AMNV)	Andy Tang	Andy Tang	14/08/2025
Witnessed By : (Name of)			
Witnessed By : (Name of)			

Gammon

CTA INTERNATIONAL AS

Air Purification System – HV Power Supply Units Test & Commissioning Report			
Contract No.:	HY/2019/13	RISC No.:	368540
Project:	Central Kowloon Route - Buildings, Electrical and Mechanical	Date:	14/08/2025
Location:	~~HVB~~ / HVB / ~~HVB~~	Room Name:	
T&C Plan Ref. No:	J3883-TVS-S-I17	Page:	
Ref. Dwg. No.:	J3883-MEP-APS-HVB-1604 & 1605 & 1606		

Part 4 : Functional and Performance Tests for HV Power Supply Units (Sheet 1 of 5)

A) Maximum Voltage Withstand Test for ESP Cell (TCP Section 4.6.1)

From:	ESP HV Switch Room 01 / 02	To:	APS Plenum No.01 / 02 / 03 Sub-assembly A / ~~B / C / D / E~~

Step 1 & 3 - Insulation Resistance Test before and after the Maximum Voltage Withstand Test

Items	Circuit No. or Details of Equipment	Insulation Resistance (MΩ)	
		Before Max. Withstand Tests	After Max. Withstand Tests
1	Sub-Assembly A (1st Col. Ionizer to Earth)	237G (Lower 3 ESP Cell) / 255G (Upper 3 ESP Cell)	268G (Lower 3 ESP Cell) / 275G (Upper 3 ESP Cell)
2	Sub-Assembly A (2nd Col. Ionizer to Earth)	234G (Lower 3 ESP Cell) / 245G (Upper 3 ESP Cell)	288G (Lower 3 ESP Cell) / 270G (Upper 3 ESP Cell)
3	Sub-Assembly A (3rd Col. Ionizer to Earth)	250G (Lower 3 ESP Cell) / 260G (Upper 3 ESP Cell)	270G (Lower 3 ESP Cell) / 266G (Upper 3 ESP Cell)
4	Sub-Assembly A (1st to 3rd Col. Collector the Earth)	260G (1st Col.) / 235G (2nd Col.) / 225G (3rd Col.)	248G (1st Col.) / 225G (2nd Col.) / 228G (3rd Col.)

Step 2 - Maximum Voltage Withstand Test

Items	Test Voltage (kV DC)	Duration (min)	Measured Voltage (kV DC)	Test Result
1	20 (Ionizer)	1	20.2	P / F / NA
2	20 (Ionizer)		20.2	P / F / NA
3	20 (Ionizer)		20.2	P / F / NA
4	8 (Collector)	1	7.2	P / F / NA

B) List of Testing Equipment / Instruments

Type	Model	Serial No	Calibration Cert. No	Date of Cert.
HV insulation tester	AR3125	6819355	KSZS25021278D001	26/02/2025
DC Voltage Meter	HVP-40DM	20230668	ZD202508111226	11/08/2025

Remark: P / F / NA = Pass / Fail / Not Applicable
The passing criteria for the test is passing the insulation test after for maximum voltage withstand test.
The insulation resistance is over 1000MOhm (*) for HV DC Cable and 30MOhm for ESP Cell

Comment:

Test / Checked By : REW No.: W133567 Grade PH-1 (Name of CTA Representative)	Name: Ho Tung	Signature: Ho Tung	Date: 14/8/25
Witnessed By : (Name of JEC Representative)	Name: John Chan	Signature:	Date: 14/8/25
Witnessed By : (Name of GCL)	Name: Boris Yan	Signature:	Date: 14/8/25
Witnessed By : (Name of AMMJV)	Name: Andy Tang	Signature: Andy Tang	Date: 14/8/25
Witnessed By : (Name of)	Name:	Signature:	Date:
Witnessed By : (Name of)	Name:	Signature:	Date:

Gammon

CTA INTERNATIONAL AS

Air Purification System – HV Power Supply Units Test & Commissioning Report			
Contract No.:	HY/2019/13	RISC No.:	368541D
Project:	Central Kowloon Route - Buildings, Electrical and Mechanical	Date:	14/08/2025
Location:	~~HVB~~ / HVB / ~~HVB~~	Room Name:	
T&C Plan Ref. No:	J3883-TVS-S-I17	Page:	
Ref. Dwg. No.:	J3883-MEP-APS-HVB-1604 & 1605 & 1606		

Part 4 : Functional and Performance Tests for HV Power Supply Units (Sheet 1 of 5)

A) Maximum Voltage Withstand Test for ESP Cell (TCP Section 4.6.1)

From:	ESP HV Switch Room 01 / 02	To:	APS Plenum No.01 / 02 / 03 Sub-assembly ~~A / B / C / D / E~~ B

Step 1 & 3 - Insulation Resistance Test before and after the Maximum Voltage Withstand Test

Items	Circuit No. or Details of Equipment	Insulation Resistance (MΩ)	
		Before Max. Withstand Tests	After Max. Withstand Tests
1	Sub-Assembly B (1st Col. Ionizer to Earth)	253G (Lower 3 ESP Cell) / 248G (Upper 3 ESP Cell)	250G (Lower 3 ESP Cell) / 260G (Upper 3 ESP Cell)
2	Sub-Assembly B (2nd Col. Ionizer to Earth)	273G (Lower 3 ESP Cell) / 280G (Upper 3 ESP Cell)	266G (Lower 3 ESP Cell) / 250G (Upper 3 ESP Cell)
3	Sub-Assembly B (3rd Col. Ionizer to Earth)	277G (Lower 3 ESP Cell) / 267G (Upper 3 ESP Cell)	250G (Lower 3 ESP Cell) / 263G (Upper 3 ESP Cell)
4	Sub-Assembly B (1st to 3rd Col. Collector the Earth)	272G (1st Col.) / 233G (2nd Col.) / 256G (3rd Col.)	260G (1st Col.) / 253G (2nd Col.) / 249G (3rd Col.)

Step 2 - Maximum Withstand Voltage Test

Items	Test Voltage (kV DC)	Duration (min)	Measured Voltage (kV DC)	Test Result
1	20 (Ionizer)	1	20.2	P / F / NA
2	20 (Ionizer)		20.2	P / F / NA
3	20 (Ionizer)		20.2	P / F / NA
4	8 (Collector)	1	7.2	P / F / NA

B) List of Testing Equipment / Instruments

Type	Model	Serial No	Calibration Cert. No	Date of Cert.
HV insulation tester	AR3125	6819355	KSZS25021278D001	26/02/2025
DC Voltage Meter	HVP-40DM	20230668	ZD202508111226	11/08/2025

Remark: P / F / NA = Pass / Fail / Not Applicable
The passing criteria for the test is passing the insulation test after for maximum voltage withstand test.
The insulation resistance is over 1000MOhm (*) for HV DC Cable and 30MOhm for ESP Cell

Comment:

	Name:	Signature:	Date:
Test / Checked By : REW No.: W13356 Grade B+H (Name of CTA Representative)	Ho Tung	Ho Tung	14/8/25
Witnessed By : (Name of JEC Representative)	John Chan		14/8/25
Witnessed By : (Name of GCL)	Boris Yan		14/8/25
Witnessed By : (Name of AMMJV)	Andy Tang	Andy Tang	14/8/25
Witnessed By : (Name of)			
Witnessed By : (Name of)			

Gammon

CIA INTERNATIONAL AS CLEAN TUNNEL AIR

Air Purification System – HV Power Supply Units Test & Commissioning Report			
Contract No.:	HY/2019/13	RISC No.:	368554A
Project:	Central Kowloon Route - Buildings, Electrical and Mechanical	Date:	14/08/2025
Location:	~~KVB~~ / HVB / ~~KVB~~	Room Name:	
T&C Plan Ref. No:	J3883-TVS-S-I17	Page:	
Ref. Dwg. No.:	J3883-MEP-APS-HVB-1604 & 1605 & 1606		

Part 4 : Functional and Performance Tests for HV Power Supply Units (Sheet 1 of 5)

A) Maximum Voltage Withstand Test for ESP Cell (TCP Section 4.6.1)

From:	ESP HV Switch Room 01 / 02	To:	APS Plenum No.01 / 02 / 03 Sub-assembly ~~A / B / C / D / E~~ C

Step 1 & 3 - Insulation Resistance Test before and after the Maximum Voltage Withstand Test

Items	Circuit No. or Details of Equipment	Insulation Resistance (MΩ)	
		Before Max. Withstand Tests	After Max. Withstand Tests
1	Sub-Assembly C (1st Col. Ionizer to Earth)	231 G (Lower 3 ESP Cell) / 234 G (Upper 3 ESP Cell)	241 G (Lower 3 ESP Cell) / 253 G (Upper 3 ESP Cell)
2	Sub-Assembly C (2nd Col. Ionizer to Earth)	266 G (Lower 3 ESP Cell) / 261 G (Upper 3 ESP Cell)	232 G (Lower 3 ESP Cell) / 242 G (Upper 3 ESP Cell)
3	Sub-Assembly C (3rd Col. Ionizer to Earth)	260 G (Lower 3 ESP Cell) / 273 G (Upper 3 ESP Cell)	261 G (Lower 3 ESP Cell) / 268 G (Upper 3 ESP Cell)
4	Sub-Assembly C (1st to 3rd Col. Collector the Earth)	212 G (1st Col.) / 218 G (2nd Col.) / 222 G (3rd Col.)	230 G (1st Col.) / 241 G (2nd Col.) / 255 G (3rd Col.)

Step 2 - Maximum Voltage Withstand Test

Items	Test Voltage (kV DC)	Duration (min)	Measured Voltage (kV DC)	Test Result
1	20 (Ionizer)	1	20.2	P / F / NA
2	20 (Ionizer)		20.2	P / F / NA
3	20 (Ionizer)		20.2	P / F / NA
4	8 (Collector)	1	7.2	P / F / NA

B) List of Testing Equipment / Instruments

Type	Model	Serial No	Calibration Cert. No	Date of Cert.
HV insulation tester	AR3125	6819355	KSZS25021278D001	26/02/2025
DC Voltage Meter	HVP-40DM	20230668	ZD202508111226	11/08/2025

Remark: P / F / NA = Pass / Fail / Not Applicable
The passing criteria for the test is passing the insulation test after for maximum voltage withstand test.
The insulation resistance is over 1000MOhm (*) for HV DC Cable and 30MOhm for ESP Cell

Comment:

	Name:	Signature:	Date:
Test / Checked By : REW No.: W133567 Grade BH1 (Name of CTA Representative)	Ho Tung	Ho Tung	14/8/25
Witnessed By : (Name of JEC Representative)	John Chan		14/8/25
Witnessed By : (Name of GCL)	Boris Yan		14/8/25
Witnessed By : (Name of AMMJV)	Andy Tang	Andy Tang	14/8/25
Witnessed By : (Name of)			
Witnessed By : (Name of)			

Gammon

CTA INTERNATIONAL AS CLEAN TUNNEL AIR

Air Purification System – HV Power Supply Units Test & Commissioning Report			
Contract No.:	HY/2019/13	RISC No.:	36854A
Project:	Central Kowloon Route - Buildings, Electrical and Mechanical	Date:	14/08/2025
Location:	~~HVB~~ / HVB / ~~HVB~~	Room Name:	
T&C Plan Ref. No:	J3883-TVS-S-I17	Page:	
Ref. Dwg. No.:	J3883-MEP-APS-HVB-1604 & 1605 & 1606		

Part 4 : Functional and Performance Tests for HV Power Supply Units (Sheet 1 of 5)

A) Maximum Voltage Withstand Test for ESP Cell (TCP Section 4.6.1)

From:	ESP HV Switch Room 01 / 02	To:	APS Plenum No.01 / 02 / 03 Sub-assembly ~~A / B / C / D / E~~ D

Step 1 & 3 - Insulation Resistance Test before and after the Maximum Voltage Withstand Test

Items	Circuit No. or Details of Equipment	Insulation Resistance (MΩ)	
		Before Max. Withstand Tests	After Max. Withstand Tests
1	Sub-Assembly D (1st Col. Ionizer to Earth)	213 G (Lower 3 ESP Cell) / 225 G (Upper 3 ESP Cell)	248 G (Lower 3 ESP Cell) / 256 G (Upper 3 ESP Cell)
2	Sub-Assembly D (2nd Col. Ionizer to Earth)	247 G (Lower 3 ESP Cell) / 260 G (Upper 3 ESP Cell)	223 G (Lower 3 ESP Cell) / 277 G (Upper 3 ESP Cell)
3	Sub-Assembly D (3rd Col. Ionizer to Earth)	280 G (Lower 3 ESP Cell) / 271 G (Upper 3 ESP Cell)	277 G (Lower 3 ESP Cell) / 265 G (Upper 3 ESP Cell)
4	Sub-Assembly D (1st to 3rd Col. Collector the Earth)	232 G (1st Col.) / 222 G (2nd Col.) / 212 G (3rd Col.)	210 G (1st Col.) / 212 G (2nd Col.) / 233 G (3rd Col.)

Step 2 - Maximum Voltage Withstand Test

Items	Test Voltage (kV DC)	Duration (min)	Measured Voltage (kV DC)	Test Result
1	20 (Ionizer)	1	20.2	P / F / NA
2	20 (Ionizer)		20.2	P / F / NA
3	20 (Ionizer)		20.2	P / F / NA
4	8 (Collector)	1	7.2	P / F / NA

B) List of Testing Equipment / Instruments

Type	Model	Serial No	Calibration Cert. No	Date of Cert.
HV insulation tester	AR3125	6819355	KSZS25021278D001	26/02/2025
DC Voltage Meter	HVP-40DM	20230668	ZD202508111226	11/08/2025

Remark: P / F / NA = Pass / Fail / Not Applicable
The passing criteria for the test is passing the insulation test after for maximum voltage withstand test.
The insulation resistance is over 1000MOhm (*) for HV DC Cable and 30MOhm for ESP Cell

Comment:

	Name:	Signature:	Date:
Test / Checked By : REW No.: W133567 Grade B+/1 (Name of CTA Representative)	Ho Tung	Ho Tung	14/8/25
Witnessed By : (Name of JEC Representative)	John Chan		14/8/25
Witnessed By : (Name of GCL)	Boris Yan		14/8/25
Witnessed By : (Name of AMMJV)	Andy Tang		14/8/25
Witnessed By : (Name of)			
Witnessed By : (Name of)			

Gammon

CTA INTERNATIONAL AS CLEAN TUNNEL AIR

Air Purification System – HV Power Supply Units Test & Commissioning Report			
Contract No.:	HY/2019/13	RISC No.:	36854A
Project:	Central Kowloon Route - Buildings, Electrical and Mechanical	Date:	14/08/2025
Location:	~~VVB~~ / HVB / ~~RVB~~	Room Name:	
T&C Plan Ref. No:	J3883-TVS-S-I17	Page:	
Ref. Dwg. No.:	J3883-MEP-APS-HVB-1604 & 1605 & 1606		

Part 4 : Functional and Performance Tests for HV Power Supply Units (Sheet 1 of 5)

A) Maximum Voltage Withstand Test for ESP Cell (TCP Section 4.6.1)

From:	ESP HV Switch Room 01 / 02	To:	APS Plenum No.01 / 02 / 03 Sub-assembly ~~A / B / C / D / E~~ A, E

Step 1 & 3 - Insulation Resistance Test before and after the Maximum Voltage Withstand Test

Items	Circuit No. or Details of Equipment	Insulation Resistance (MΩ)	
		Before Max. Withstand Tests	After Max. Withstand Tests
1	Sub-Assembly E (1st Col. Ionizer to Earth)	230 G (Lower 3 ESP Cell) / 235 G (Upper 3 ESP Cell)	236 G (Lower 3 ESP Cell) / 247 G (Upper 3 ESP Cell)
2	Sub-Assembly E (2nd Col. Ionizer to Earth)	276 G (Lower 3 ESP Cell) / 273 G (Upper 3 ESP Cell)	275 G (Lower 3 ESP Cell) / 260 G (Upper 3 ESP Cell)
3	Sub-Assembly E (3rd Col. Ionizer to Earth)	265 G (Lower 3 ESP Cell) / 277 G (Upper 3 ESP Cell)	256 G (Lower 3 ESP Cell) / 267 G (Upper 3 ESP Cell)
4	Sub-Assembly A (1st to 3rd Col. Collector the Earth)	244 G (1st Col.) / 230 G (2nd Col.) / 241 G (3rd Col.)	265 G (1st Col.) / 266 G (2nd Col.) / 251 G (3rd Col.)

Step 2 - Maximum Voltage Withstand Test

Items	Test Voltage (kV DC)	Duration (min)	Measured Voltage (kV DC)	Test Result
1	20 (Ionizer)	1	20.2	P / F / NA
2	20 (Ionizer)		20.2	P / F / NA
3	20 (Ionizer)		20.2	P / F / NA
4	8 (Collector)	1	7.2	P / F / NA

B) List of Testing Equipment / Instruments

Type	Model	Serial No	Calibration Cert. No	Date of Cert.
HV insulation tester	AR3125	6819355	KSZS25021278D001	26/02/2025
DC Voltage Meter	HVP-40DM	20230668	ZD202508111226	11/08/2025

Remark: P / F / NA = Pass / Fail / Not Applicable
The passing criteria for the test is passing the insulation test after for maximum voltage withstand test.
The insulation resistance is over 1000MOhm (*) for HV DC Cable and 30MOhm for ESP Cell

Comment:

	Name:	Signature:	Date:
Test / Checked By : REW No.: W133557 Grade: Sr I (Name of CTA Representative)	Ho Tung	Ho Tung	14/8/25
Witnessed By : (Name of JEC Representative)	John Chan		14/8/25
Witnessed By : (Name of GCL)	Boris Yan		14/8/25
Witnessed By : (Name of AMMJV)	Andy Tang	Andy Tang	14/8/25
Witnessed By : (Name of)			
Witnessed By : (Name of)			

Gammon

CTA INTERNATIONAL AS CLEAN TUNNEL AIR

Air Purification System – HV Power Supply Units Test & Commissioning Report			
Contract No.:	HY/2019/13	RISC No.:	36854A
Project:	Central Kowloon Route - Buildings, Electrical and Mechanical	Date:	14/08/2025
Location:	YVB / HVB / KVB	Room Name:	
T&C Plan Ref. No:	J3883-APS-S-I-17	Page:	
Ref. Dwg. No.:	J883/MEP/APS/HVB/1604 & 1605 & 1606		

Part 4 : Functional and Performance Tests for HV Power Supply Units (Sheet 2A of 5)

C) ESP HV Power Supply Cabinets Information

Cabinets ID:	HVB-APS2-ESP-PSC-01	Main Switch Rating:	80A
Location:	ESP HV Switch Room 01 / 02	Fed From:	HVB-DB-ZSP02-1

D) Output Voltage Measurement for HV Power Supply Units (TCP Section 4.6.2)

Item	Circuit No. or Details of Equipment	Vol-meter Reading at PSU (kV)	Am-meter Reading of PSU (mA)	Measured Voltage (kV) at ESP	Result (see remark)
1	HVB-APS2-PSU-01A Subassembly 14 kV (I1)	14.0	71.2	14.1	P / F
2	HVB-APS2-PSU-02A Subassembly 14 kV (I2)	14.0	73.4	14.1	P / F
3	HVB-APS2-PSU-03A Subassembly 14 kV (I3)	14.0	75.1	14.1	P / F
4	HVB-APS2-PSU-04A Subassembly 6.5 kV (C)	6.5	17.1	6.6	P / F
5	HVB-APS2-PSU-05B Subassembly 14 kV (I1)	14.0	75.2	14.1	P / F
6	HVB-APS2-PSU-06B Subassembly 14 kV (I2)	14.0	74.1	14.1	P / F
7	HVB-APS2-PSU-07B Subassembly 14 kV (I3)	14.0	77.7	14.1	P / F
8	HVB-APS2-PSU-08B Subassembly 6.5 kV (C)	6.5	13.4	6.6	P / F
9	HVB-APS2-PSU-09C Subassembly 14 kV (I1)	14.0	75.1	14.0	P / F
10	HVB-APS2-PSU-10C Subassembly 14 kV (I2)	14.0	71.2	14.0	P / F

E) List of Testing Equipment / Instruments

Type	Model	Serial No	Calibration Cert. No	Date of Cert.
DC Voltage Meter	HVP-40DM	20230668	202025of11226	11/08/2025

Remark: P / F = Pass / Fail, measured output voltage for ionizer and for collector is±14kV ±5% 6.5kV ±5%

Comment:

Test / Checked By : REW No.: WB3567 Grade B+H (Name of CTA Representative)	Name: HO TUNG	Signature: Ho Tung	Date: 14/08/2025
Witnessed By : (Name of JEC Representative)	Name: John Chan	Signature:	Date: 14 AUG 2025
Witnessed By : (Name of GCL)	Name: Boris Yan	Signature:	Date: 14 AUG 2025
Witnessed By : (Name of AMMTV)	Name: Andy Tang	Signature: Lee Tang	Date: 14 AUG 2025
Witnessed By : (Name of)	Name:	Signature:	Date:
Witnessed By : (Name of)	Name:	Signature:	Date:

Gammon

CTA INTERNATIONAL AS CLEAN TUNNEL AIR

Air Purification System – HV Power Supply Units Test & Commissioning Report			
Contract No.:	HY/2019/13	RISC No.:	36854A
Project:	Central Kowloon Route - Buildings, Electrical and Mechanical	Date:	14/08/2025
Location:	YVB / HVB / KVB	Room Name:	
T&C Plan Ref. No:	J3883-APS-S-I-17	Page:	
Ref. Dwg. No.:	J3883/MEP/APS/HVB/1606 & 1605 & 1606		

Part 4 : Functional and Performance Tests for HV Power Supply Units (Sheet 2B of 5)

C) ESP HV Power Supply Cabinets Information

Cabinets ID:	HVB-APS2-ESP-PSC-02	Main Switch Rating:	80A
Location:	ESP HV Switch Room 01 / 02	Fed From:	HVB-DB-ESP02-2

D) Output Voltage Measurement for HV Power Supply Units (TCP Section 4.6.2)

Item	Circuit No. or Details of Equipment	Vol-meter Reading at PSU (kV)	Am-meter Reading of PSU (mA)	Measured Voltage (kV) at ESP	Result (see remark)
1	HVB-APS2-PSU-11 C Subassembly 14kV (I1)	14.0	71.2	14.0	P / F
2	HVB-APS2-PSU-12 C Subassembly 6.5kV (C)	6.5	12.3	6.5	P / F
3	HVB-APS2-PSU-13 D Subassembly 14kV (I1)	14.0	75.4	14.0	P / F
4	HVB-APS2-PSU-14 D Subassembly 14kV (I2)	14.0	77.1	14.0	P / F
5	HVB-APS2-PSU-15 D Subassembly 14kV (I3)	14.0	76.2	14.0	P / F
6	HVB-APS2-PSU-16 D Subassembly 6.5kV (C)	6.5	12.1	6.5	P / F
7	HVB-APS2-PSU-17 E Subassembly 14kV (I1)	14.0	74.5	14.0	P / F
8	HVB-APS2-PSU-18 E Subassembly 14kV (I2)	14.0	77.2	14.0	P / F
9	HVB-APS2-PSU-19 E Subassembly 14kV (I3)	14.0	75.3	14.0	P / F
10	HVB-APS2-PSU-20 E Subassembly 6.5kV (C)	6.5	12.2	6.5	P / F

E) List of Testing Equipment / Instruments

Type	Model	Serial No	Calibration Cert. No	Date of Cert.
DC Voltage Meter	HVP-40PM	20230668	ZD2025081126	11/08/2025

Remark: P / F = Pass / Fail, measured output voltage for ionizer and for collector is±14kV ±5% 6.5kV ±5%

Comment:

Test / Checked By : REW No.: W133567 Grade BHH (Name of CTA Representative)	Name: HO TUNG	Signature: Ho Tung	Date: 14/08/2025
Witnessed By : (Name of JEC Representative)	Name: John Chan	Signature:	Date: 14 AUG 2025
Witnessed By : (Name of GCL)	Name: Boris Yan	Signature:	Date: 14 AUG 2025
Witnessed By : (Name of AMMJV)	Name: Andy Tang	Signature:	Date: 14 AUG 2025
Witnessed By : (Name of)	Name:	Signature:	Date:
Witnessed By : (Name of)	Name:	Signature:	Date:

Gammon

CTA INTERNATIONAL AS CLEAN TUNNEL AIR

Air Purification System – HV Power Supply Units Test & Commissioning Report			
Contract No.:	HY/2019/13	RISC No.:	3685410
Project:	Central Kowloon Route - Buildings, Electrical and Mechanical	Date:	14/08/2025
Location:	YVB / HVB / KVB	Room Name:	
T&C Plan Ref. No:	J3883-APS-S2-17	Page:	
Ref. Dwg. No.:	J3883/MED/APS/HVB/1604 & 1605 & 1606		

Part 4 : Functional and Performance Tests for HV Power Supply Units (Sheet 4A of 5)

G) Functional Test for the Constant Current Control Mode Cabinets ID: HVB-APS2-ESP-PSC-01

(TCP Section 4.6.4)

Item	Equipment Description	Functional Test for Constant Current Control Mode				
		Before Earth Fault Simulation		During Earth Fault Simulation		Constant Output Current Observed on PSU *
		"CC" not light up	Output Current on PSU	"CC" light up	Output Current on PSU	
1	HVB-APS2-PSU-01 A Subassembly 14 kV (Z1)	P / F	71.1 mA	P / F	0 mA	P / F
2	HVB-APS2-PSU-02 A Subassembly 14 kV (Z2)	P / F	72.5 mA	P / F	0 mA	P / F
3	HVB-APS2-PSU-03 A Subassembly 14 kV (Z3)	P / F	73.4 mA	P / F	0 mA	P / F
4	HVB-APS2-PSU-06 A Subassembly 6.5 kV (C)	P / F	12.1 mA	P / F	0 mA	P / F
5	HVB-APS2-PSU-05 B Subassembly 14 kV (Z1)	P / F	71.2 mA	P / F	0 mA	P / F
6	HVB-APS2-PSU-06 B Subassembly 14 kV (Z2)	P / F	77.1 mA	P / F	0 mA	P / F
7	HVB-APS2-PSU-07 B Subassembly 14 kV (Z3)	P / F	77.2 mA	P / F	0 mA	P / F
8	HVB-APS2-PSU-08 B Subassembly 6.5 kV (C)	P / F	12.4 mA	P / F	0 mA	P / F
9	HVB-APS2-PSU-09 C Subassembly 14 kV (Z1)	P / F	75.2 mA	P / F	0 mA	P / F
10	HVB-APS2-PSU-10 C Subassembly 14 kV (Z2)	P / F	77.1 mA	P / F	0 mA	P / F

Remarks: P / F = Pass / Fail,
* Acceptance Criteria for Output Current during the Earth Fault Simulation is ± 5% of before the Fault

Comment:

Test / Checked By : REW No.: W135567 Grade B+F+ (Name of CTA Representative)	Name: HO TUNG	Signature: Ho Tung	Date: 14/08/2025
Witnessed By : (Name of JEC Representative)	Name: John Chan	Signature:	Date: 14 AUG 2025
Witnessed By : (Name of GCL)	Name: Boris Yan	Signature:	Date: 14 AUG 2025
Witnessed By : (Name of AMMTV)	Name: Andy Tang	Signature: Andy Tang	Date: 14 AUG 2025
Witnessed By : (Name of)	Name:	Signature:	Date:
Witnessed By : (Name of)	Name:	Signature:	Date:

Gammon

CTA INTERNATIONAL AS CLEAN TUNNEL AIR

Air Purification System – HV Power Supply Units Test & Commissioning Report			
Contract No.:	HY/2019/13	RISC No.:	36854A
Project:	Central Kowloon Route - Buildings, Electrical and Mechanical	Date:	14/08/2025
Location:	YVB / HVB / KVB	Room Name:	
T&C Plan Ref. No:	J3883-APS-S-I-17	Page:	
Ref. Dwg. No.:	J3883/MZP/APS/HVB/1604 & 1605 & 1606		

Part 4 : Functional and Performance Tests for HV Power Supply Units (Sheet 4B of 5)

G) Functional Test for the Constant Current Control Mode Cabinets ID: HVB-APS2-ESP-PSC-02

(TCP Section 4.6.4)

Item	Equipment Description	Functional Test for Constant Current Control Mode				
		Before Earth Fault Simulation		During Earth Fault Simulation		Constant Output Current Observed on PSU *
		"CC" not light up	Output Current on PSU	"CC" light up	Output Current on PSU	
1	HVB-APS2-PSU-01 C Subassembly 14 kV (I3)	P / F	71.2 mA	P / F	0 mA	P / F
2	HVB-APS2-PSU-12 C Subassembly 65 kV (C)	P / F	12.3 mA	P / F	0 mA	P / F
3	HVB-APS2-PSU-13 D Subassembly 15 kV (I1)	P / F	76.8 mA	P / F	0 mA	P / F
4	HVB-APS2-PSU-14 D Subassembly 14 kV (I2)	P / F	64.5 mA	P / F	0 mA	P / F
5	HVB-APS2-PSU-15 D Subassembly 14 kV (I3)	P / F	69.3 mA	P / F	0 mA	P / F
6	HVB-APS2-PSU-16 D Subassembly 65 kV (C)	P / F	12.3 mA	P / F	0 mA	P / F
7	HVB-APS2-PSU-17 D Subassembly 14 kV (I1)	P / F	71.2 mA	P / F	0 mA	P / F
8	HVB-APS2-PSU-18 D Subassembly 14 kV (I2)	P / F	65.4 mA	P / F	0 mA	P / F
9	HVB-APS2-PSU-19 D Subassembly 14 kV (I3)	P / F	69.7 mA	P / F	0 mA	P / F
10	HVB-APS2-PSU-20 D Subassembly 65 kV (C)	P / F	10.2 mA	P / F	0 mA	P / F

Remarks: P / F = Pass / Fail,
* Acceptance Criteria for Output Current during the Earth Fault Simulation is ± 5% of before the Fault

Comment:

Test / Checked By : REW No.: W133567 Grade: B+H (Name of CTA Representative)	Name: HO TUNG	Signature: Ho Tung	Date: 14/08/2025
Witnessed By : (Name of JEC Representative)	Name: John Chan	Signature:	Date: 14 AUG 2025
Witnessed By : (Name of GCL)	Name: Boris Yan	Signature:	Date: 14 AUG 2025
Witnessed By : (Name of AMMJV)	Name: Andy Tang	Signature:	Date: 14 AUG 2025
Witnessed By : (Name of)	Name:	Signature:	Date:
Witnessed By : (Name of)	Name:	Signature:	Date:

Gammon

CTA INTERNATIONAL AS

Air Purification System – HV Power Supply Units Test & Commissioning Report			
Contract No.:	HY/2019/13	RISC No.:	36854A
Project:	Central Kowloon Route - Buildings, Electrical and Mechanical	Date:	14/08/2025
Location:	YVB / HVB / KVB	Room Name:	
T&C Plan Ref. No:	73883-APS-S-Z-17	Page:	
Ref. Dwg. No.:	73883/MEP/APS/HVB/1604 & 1605 & 1606		

Part 4 : Functional and Performance Tests for HV Power Supply Units (Sheet 5 of 5)

H) Functional Test for Build-in Door Limit and Door Limit Switches (TCP Section 4.6.8 & 4.6.9)

Items	Circuit No. or Details of Equipment	Build-in Door Limit Switch Front and Rear			Limit Switch Signal at Rear of Cabinet Door correctly to APS PLC	Result
		Cooling Unit switch off ~15s when opened cabinet door	Cooling Unit Switch On ~15s after closed cabinet door	Condenser Fan & Compressor switch on after ~3 mins closed cabinet door		
1	Build-in Door Limit Switch at Cabinet Front Door	N/A	N/A	N/A	N/A	P / F
2	Build-in Door Limit Switch at Cabinet Rear Door	N/A	N/A	N/A	N/A	P / F
3	Limit Switch at Rear of Cabinet Door	N/A	N/A	N/A	✓	P / F

Remark: P / F / NA = Pass / Fail / Not Applicable

Comment:

Test / Checked By : REW No.: W13X67 Grade B+H (Name of CTA Representative)	Name: HO TUNG	Signature: Ho Tung	Date: 14/08/2025
Witnessed By : (Name of JEC Representative)	Name: John Chan	Signature:	Date: 14 AUG 2025
Witnessed By : (Name of GCL)	Name: Boris Yan	Signature:	Date: 14 AUG 2025
Witnessed By : (Name of AMMOV)	Name: Andy Tang	Signature:	Date: 14 AUG 2025
Witnessed By : (Name of)	Name:	Signature:	Date:
Witnessed By : (Name of)	Name:	Signature:	Date:

Gammon

CTA INTERNATIONAL AS CLEAN TUNNEL AIR

Air Purification System – HV Power Supply Units Test & Commissioning Report			
Contract No.:	HY/2019/13	RISC No.:	~~36849A~~ 36855A
Project:	Central Kowloon Route - Buildings, Electrical and Mechanical	Date:	14/08/2025
Location:	~~YVB~~ / HVB / ~~KVB~~	Room Name:	
T&C Plan Ref. No:	J3883-APS-S-I-17	Page:	
Ref. Dwg. No.:	J3883/MEP/APS/HVB/3203 & 3204		

Part 1 : Installation Inspection of ESP HV Power Supply Cabinets (Sheet 1 of 3)			
A) ESP HV Power Supply Cabinets Information			
Cabinets ID:	H VB-APS 3 -ESP-PSC-0 1&02	Main Switch Rating:	80A
Location:	ESP HV Switch Room 01 / 02	Supply Fed From:	HVB-DB-ESP03-1

B) Visual Inspection for ESP HV Power Supply Cabinets (TCP Section 4.3.1)

Items	Description of Inspection	Test Result
a.	Verify cabinets are installed per the accepted ESP HV Switch Room layout and plant room details	P / F / NA
b.	Check clearance space (≥1400mm front, ≥600mm rear) per EMSD CoP	P / F / NA
c.	Ensure cabinets are securely fixed, sealed, and free of damage, corrosion, wear, or dust	P / F / NA
d.	Check that the cabinet door, door handle and lock are installed and operated properly	P / F / NA
C) Visual Inspection for Cabinet Top Cooling Units (TCP Section 4.3.2)		
a.	Check that the cabinet top cooling units are without visual damage, corrosion or sign of wear and tear	P / F / NA
b.	Check that the cabinet top cooling unit is securely fixed on top of the cabinets according to the accepted shop drawing and fabrication drawing	P / F / NA
c.	Check the exhaust lourve of the cabinet cooling unit to ensure no obstructions or blockages	P / F / NA
d.	Check the internal air duct is connected properly with the cabinet top cooling unit	P / F / NA
e.	Check the cable connection between cabinet and cooling unit are completed properly	P / F / NA

Remark: P / F / NA = Pass / Fail / Not Applicable

Comment:

Test / Checked By : REW No.: W133I67 Grade B+H (Name of CTA Representative)	Name: HO TUNG	Signature: Ho Tung	Date: 14/08/2025
Witnessed By : (Name of JEC Representative)	Name: John Chan	Signature:	Date: 14 AUG 2025
Witnessed By : (Name of aec)	Name: Raymond La	Signature:	Date: 14 AUG 2025
Witnessed By : (Name of AMMJV)	Name: Andy Tang	Signature:	Date: 14 AUG 2025
Witnessed By : (Name of)	Name:	Signature:	Date:
Witnessed By : (Name of)	Name:	Signature:	Date:

Gammon

CTA INTERNATIONAL AS CLEAN TUNNEL AIR

Air Purification System – HV Power Supply Units Test & Commissioning Report			
Contract No.:	HY/2019/13	RISC No.:	~~36819A~~ 36855A
Project:	Central Kowloon Route - Buildings, Electrical and Mechanical	Date:	14/08/2025
Location:	~~YVB~~ / HVB / ~~KVB~~	Room Name:	
T&C Plan Ref. No:	J3883-APS-S-I-17	Page:	
Ref. Dwg. No.:	J3883/MEP/APS/HVB/3203 & 3204		

Part 1 : Installation Inspection of ESP HV Power Supply Cabinets (Sheet 2 of 3)		
Items	**Description of Inspection**	**Test Result**
D) Visual Inspection for ESP HV Power Supply Units (TCP Section 4.3.3)		
a.	No visible damage to impair safety	(P) / F / NA
b.	Check that the ESP HV power supply units are securely fixed inside the Power Supply Cabinet with no physical damage, or signs of deterioration	(P) / F / NA
c.	Check and record the equipment ID, manufacturer, model number, serial number and other information, showing on the name plate for cabinet top cooling unit and ESP HV power supply units, and record it the initial installed location on the test form	(P) / F / NA
E) Visual Inspection for Accessories inside the Cabinet (TCP Section 4.3.4)		
a.	Check that the limit switch is securely fixed on rear door of the cabinet with proper cabling works	(P) / F / NA
Remark: P / F / NA = Pass / Fail / Not Applicable		
Comment:		

Test / Checked By : REW No.: W133567 Grade B+H (Name of CTA Representative)	Name: HO TUNG	Signature:	Date: 14/08/2025
Witnessed By : (Name of JEC Representative)	Name: John Chan	Signature:	Date: 14 AUG 2025
Witnessed By : (Name of GCL)	Name: Raymond Lau	Signature:	Date: 14 AUG 2025
Witnessed By : (Name of AMMJV)	Name: Andy Tang	Signature:	Date: 14 AUG 2025
Witnessed By : (Name of)	Name:	Signature:	Date:
Witnessed By : (Name of)	Name:	Signature:	Date:

Gammon

CTA INTERNATIONAL AS

Air Purification System – HV Power Supply Units Test & Commissioning Report			
Contract No.:	HY/2019/13	RISC No.:	~~36849~~A 36855A
Project:	Central Kowloon Route - Buildings, Electrical and Mechanical	Date:	14/08/2025
Location:	~~YVB~~ / HVB / ~~KVB~~	Room Name:	
T&C Plan Ref. No:	J3883-APS-S-I-17	Page:	
Ref. Dwg. No.:	J3883/MEP/APS/HVB/3203 & 3204		

Part 1 : Installation Inspection of ESP HV Power Supply Cabinets (Sheet 3A of 3)					
F) Equipment List for HV Power Supply Cabinet (TCP Section 4.3.3)					
Cabinets ID: H VB-APS 3 -ESP-PSC-0 1			Main Switch Rating:	80A	
Location : ESP HV Switch Room 01 / 02			Supply Fed From:	HVB-DB-ESP03-1	
Item	Equipment ID / Description	Brand / Model No.		Serial No.	Check
1	19" Equipment Rack	Rittal		24244-02-17	☑
2	Top Cabinet Cooling Unit	Rittal	SK 3385.500	N/A	☑
3	H VB-APS 3 -PSU- 01 A Subassembly Ionizer 1	FUG	HCP 1600-20000 MOD	24244-01-161	☑
4	H VB-APS 3 -PSU- 02 A Subassembly Ionizer 2	FUG	HCP 1600-20000 MOD	24244-01-162	☑
5	H VB-APS 3 -PSU- 03 A Subassembly Ionizer 3	FUG	HCP 1600-20000 MOD	24244-01-163	☑
6	H VB-APS 3 -PSU- 04 A Subassembly Collector	FUG	HCP 1600-20000 MOD	24244-01-164	☑
7	H VB-APS 3 -PSU- 05 B Subassembly Ionizer 1	FUG	HCP 1600-20000 MOD	24244-01-165	☑
8	H VB-APS 3 -PSU- 06 B Subassembly Ionizer 2	FUG	HCP 1600-20000 MOD	24244-01-166	☑
9	H VB-APS 3 -PSU- 07 B Subassembly Ionizer 3	FUG	HCP 1600-20000 MOD	24244-01-167	☑
10	H VB-APS 3 -PSU- 08 B Subassembly Collector	FUG	HCP 1600-20000 MOD	24244-01-168	☑
11	H VB-APS 3 -PSU- 09 C Subassembly Ionizer 1	FUG	HCP 1600-20000 MOD	24244-01-169	☑
12	H VB-APS 3 -PSU- 10 C Subassembly Ionizer 2	FUG	HCP 1600-20000 MOD	24244-01-170	☑
Comment:					

Test / Checked By : REW No.: W133587 Grade B+M (Name of CTA Representative)	Name: HO TUNG	Signature: Ho Tung	Date: 14/08/2025
Witnessed By : (Name of JEC Representative)	Name: John Chan	Signature:	Date: 14 AUG 2025
Witnessed By : (Name of GCL)	Name: Raymond Lam	Signature:	Date: 14 AUG 2025
Witnessed By : (Name of AMMJV)	Name: Andy Tang	Signature:	Date: 14 AUG 2025
Witnessed By : (Name of)	Name:	Signature:	Date:
Witnessed By : (Name of)	Name:	Signature:	Date:

Gammon

CTA INTERNATIONAL AS CLEAN TUNNEL AIR

Air Purification System – HV Power Supply Units Test & Commissioning Report			
Contract No.:	HY/2019/13	RISC No.:	~~36849A~~ 36855A
Project:	Central Kowloon Route - Buildings, Electrical and Mechanical	Date:	14/08/2025
Location:	~~YVB~~ / HVB / ~~KVB~~	Room Name:	
T&C Plan Ref. No:	J3883-APS-S-I-17	Page:	
Ref. Dwg. No.:	J3883/MEP/APS/HVB/3203 & 3204		

Part 1 : Installation Inspection of ESP HV Power Supply Cabinets (Sheet 3B of 3)					
F) Equipment List for HV Power Supply Cabinet (TCP Section 4.3.3)					
Cabinets ID: H VB-APS 3 -ESP-PSC-0 2			Main Switch Rating:	80A	
Location : ESP HV Switch Room 01 / 02			Supply Fed From:	HVB-DB-ESP03-2	
Item	Equipment ID / Description	Brand / Model No.		Serial No.	Check
1	19" Equipment Rack	Rittal		24244-02-18	☑
2	Top Cabinet Cooling Unit	Rittal	SK 3385.500	N/A	☑
3	H VB-APS 3 -PSU- 11 C Subassembly Ionizer 3	FUG	HCP 1600-20000 MOD	24244-01-171	☑
4	H VB-APS 3 -PSU- 12 C Subassembly Collector	FUG	HCP 1600-20000 MOD	24244-01-172	☑
5	H VB-APS 3 -PSU- 13 D Subassembly Ionizer 1	FUG	HCP 1600-20000 MOD	24244-01-173	☑
6	H VB-APS 3 -PSU- 14 D Subassembly Ionizer 2	FUG	HCP 1600-20000 MOD	24244-01-174	☑
7	H VB-APS 3 -PSU- 15 D Subassembly Ionizer 3	FUG	HCP 1600-20000 MOD	24244-01-175	☑
8	H VB-APS 3 -PSU- 16 D Subassembly Collector	FUG	HCP 1600-20000 MOD	24244-01-176	☑
9	H VB-APS 3 -PSU- 17 E Subassembly Ionizer 1	FUG	HCP 1600-20000 MOD	24244-01-177	☑
10	H VB-APS 3 -PSU- 18 E Subassembly Ionizer 2	FUG	HCP 1600-20000 MOD	24244-01-178	☑
11	H VB-APS 3 -PSU- 19 E Subassembly Ionizer 3	FUG	HCP 1600-20000 MOD	24244-01-179	☑
12	H VB-APS 3 -PSU- 20 E Subassembly Collector	FUG	HCP 1600-20000 MOD	24244-01-180	☑
Comment:					

Test / Checked By : REW No.: W133587 Grade B+M (Name of CTA Representative)	Name: Ho Tung	Signature:	Date: 14/08/2025
Witnessed By : (Name of JEC Representative)	Name: John Chan	Signature:	Date: 14 AUG 2025
Witnessed By : (Name of GCL)	Name: Raymond Cao	Signature:	Date: 14 AUG 2025
Witnessed By : (Name of AMMJV)	Name: Andy Tang	Signature:	Date: 14 AUG 2025
Witnessed By : (Name of)	Name:	Signature:	Date:
Witnessed By : (Name of)	Name:	Signature:	Date:

Gammon

CTA INTERNATIONAL AS CLEAN TUNNEL AIR

Air Purification System – HV Power Supply Units Test & Commissioning Report			
Contract No.:	HY/2019/13	RISC No.:	36857
Project:	Central Kowloon Route - Buildings, Electrical and Mechanical	Date:	17/09/2025
Location:	YVB / HVB / KVB	Room Name:	HV Room 2
T&C Plan Ref. No:		Page:	
Ref. Dwg. No.:			

Part 3: Inspection and Test for Electrical Installations (Sheet 2A of 5)

B) Earth Loop Impedance Test (TCP Section 4.5.3)

ESP HV Power Supply Cabinets Information

Cabinets ID:	H VB-APS3-ESP-PSC-01	Main Switch Rating:	80A
Location:	ESP HV Switch Room 01 / 02	Supply Fed From:	HVB-DB-ESP03

Circuit No	Details of Equipment	Type of Protective Device	Rating	Earth Loop Impedance (Zs) (Ω)	Test Result
1	HVB-APS3-PSU-01 Subassembly I1	RCBO	16A SP	0.16	P / F / NA
2	HVB-APS3-PSU-02 Subassembly I2	RCBO	16A SP	0.16	P / F / NA
3	HVB-APS3-PSU-03 Subassembly I3	RCBO	16A SP	0.15	P / F / NA
4	HVB-APS3-PSU-04 Subassembly C	RCBO	16A SP	0.14	P / F / NA
5	HVB-APS3-PSU-05 Subassembly I1	RCBO	16A SP	0.14	P / F / NA
6	HVB-APS3-PSU-06 Subassembly I2	RCBO	16A SP	0.16	P / F / NA
7	HVB-APS3-PSU-07 Subassembly I3	RCBO	16A SP	0.16	P / F / NA
8	HVB-APS3-PSU-08 Subassembly C	RCBO	16A SP	0.18	P / F / NA
9	HVB-APS3-PSU-09 Subassembly I1	RCBO	16A SP	0.17	P / F / NA
10	HVB-APS3-PSU-10 Subassembly I2	RCBO	16A SP	0.15	P / F / NA

Remark: P / F / NA = Pass / Fail / Not Applicable
The Passing Criteria for the Max Earth Fault Loop Independence shall refer to EMSD COP.

Comment:

	Name:	Signature:	Date:
Test / Checked By : REW No.: W133567 Grade H (Name of CTA Representative)	Ho Tung		17/09/2025
Witnessed By : (Name of JEC Representative)	John Chan		17/09/2025
Witnessed By : (Name of GCL)	Raymond Lau		17/09/2025
Witnessed By : (Name of AMMJV)	Patrick Yung		17/09/2025
Witnessed By : (Name of)			
Witnessed By : (Name of)			

Gammon

CTA INTERNATIONAL AS CLEAN TUNNEL AIR

Air Purification System – HV Power Supply Units Test & Commissioning Report			
Contract No.:	HY/2019/13	RISC No.:	36857
Project:	Central Kowloon Route - Buildings, Electrical and Mechanical	Date:	17/09/2025
Location:	YVB / HVB / KVB	Room Name:	HV Room 2
T&C Plan Ref. No:		Page:	
Ref. Dwg. No.:			

Part 3: Inspection and Test for Electrical Installations (Sheet 2B of 5)

B) Earth Loop Impedance Test (TCP Section 4.5.3)

ESP HV Power Supply Cabinets Information

Cabinets ID:	HVB-APS3-ESP-PSC-02	Main Switch Rating:	80A
Location:	ESP HV Switch Room 01 / 02	Supply Fed From:	HVB-DB-ESP03

Circuit No	Details of Equipment	Type of Protective Device	Rating	Earth Loop Impedance (Zs) (Ω)	Test Result
1	HVB-APS3-PSU-11 Subassembly I3	RCBO	16A SP	0.14	P / F / NA
2	HVB-APS3-PSU-12 Subassembly C	RCBO	16A SP	0.14	P / F / NA
3	HVB-APS3-PSU-13 Subassembly I1	RCBO	16A SP	0.14	P / F / NA
4	HVB-APS3-PSU-14 Subassembly I2	RCBO	16A SP	0.13	P / F / NA
5	HVB-APS3-PSU-15 Subassembly I3	RCBO	16A SP	0.15	P / F / NA
6	HVB-APS3-PSU-16 Subassembly C	RCBO	16A SP	0.16	P / F / NA
7	HVB-APS3-PSU-17 Subassembly I1	RCBO	16A SP	0.16	P / F / NA
8	HVB-APS3-PSU-18 Subassembly I2	RCBO	16A SP	0.15	P / F / NA
9	HVB-APS3-PSU-19 Subassembly I3	RCBO	16A SP	0.15	P / F / NA
10	HVB-APS3-PSU-20 Subassembly C	RCBO	16A SP	0.16	P / F / NA

Remark: P / F / NA = Pass / Fail / Not Applicable
The Passing Criteria for the Max Earth Fault Loop Independence shall refer to EMSD COP.

Comment:

Test / Checked By : REW No.: W133567 Grade H (Name of CTA Representative)	Name: Ho Tung	Signature:	Date: 17/09/2025
Witnessed By : (Name of JEC Representative)	Name: John Chan	Signature:	Date: 17/09/2025
Witnessed By : (Name of GCL)	Name: Raymond Lam	Signature:	Date: 17/09/2025
Witnessed By : (Name of AMMTV)	Name: Patrick Yung	Signature:	Date: 17/09/2025
Witnessed By : (Name of)	Name:	Signature:	Date:
Witnessed By : (Name of)	Name:	Signature:	Date:

Gammon

CTA INTERNATIONAL AS

Air Purification System – HV Power Supply Units Test & Commissioning Report			
Contract No.:	HY/2019/13	RISC No.:	36857
Project:	Central Kowloon Route - Buildings, Electrical and Mechanical	Date:	17/09/2025
Location:	YVB / HVB / KVB	Room Name:	HV Room 2
T&C Plan Ref. No:		Page:	
Ref. Dwg. No.:			

Part 3: Inspection and Test for Electrical Installations (Sheet 3 of 5)

C) Functional Test of Residual Current Device (RCD) (TCP Section 4.5.3)

ESP HV Power Supply Cabinets Information

Cabinets ID:	HVB-APS3-ESP-PSC-01	Main Switch Rating:	80A
Location:	ESP HV Switch Room 01 / 02	Supply Fed From:	HVB-DB-ESP-03

Circuit No. or Details of Equipment	Type of Protective Device	Rating	Polarity	RCD 50% (ms)	RCD 100% (ms)	Test Result
1	RCBO	16A SP	P / F / NA	P / F / NA	26.7	P / F / NA
2	RCBO	16A SP	P / F / NA	P / F / NA	36.4	P / F / NA
3	RCBO	16A SP	P / F / NA	P / F / NA	36.8	P / F / NA
4	RCBO	16A SP	P / F / NA	P / F / NA	36.2	P / F / NA
5	RCBO	16A SP	P / F / NA	P / F / NA	26.9	P / F / NA
6	RCBO	16A SP	P / F / NA	P / F / NA	28	P / F / NA
7	RCBO	16A SP	P / F / NA	P / F / NA	26.5	P / F / NA
8	RCBO	16A SP	P / F / NA	P / F / NA	36.3	P / F / NA
9	RCBO	16A SP	P / F / NA	P / F / NA	36.4	P / F / NA
10	RCBO	16A SP	P / F / NA	P / F / NA	36.4	P / F / NA

Remark: P / F / NA = Pass / Fail / Not Applicable
Tripping time of RCD for 30mA leakage current shall be within 300ms.

Comment:

	Name:	Signature:	Date:
Test / Checked By : REW No.: W133567 Grade H (Name of CTA Representative)	Ho. Tung		17/09/2025
Witnessed By : (Name of JEC Representative)	John Chan		17/09/2025
Witnessed By : (Name of GLL)	Raymond Lam		17/09/2025
Witnessed By : (Name of AMMJV)	Patrick Yung		17/09/2025
Witnessed By : (Name of)			
Witnessed By : (Name of)			

Gammon

CTA INTERNATIONAL AS

Air Purification System – HV Power Supply Units Test & Commissioning Report			
Contract No.:	HY/2019/13	RISC No.:	36857
Project:	Central Kowloon Route - Buildings, Electrical and Mechanical	Date:	17/09/2025
Location:	YVB / HVB / KVB	Room Name:	HV Room 2
T&C Plan Ref. No:		Page:	
Ref. Dwg. No.:			

Part 3: Inspection and Test for Electrical Installations (Sheet 3 of 5)

C) Functional Test of Residual Current Device (RCD) (TCP Section 4.5.3)

ESP HV Power Supply Cabinets Information

Cabinets ID:	HVB-APS3-ESP-PSC-02	Main Switch Rating:	80A
Location:	ESP HV Switch Room 01 / 02	Supply Fed From:	HVB-DB-ESP03

Circuit No. or Details of Equipment	Type of Protective Device	Rating	Polarity	RCD 50% (ms)	RCD 100% (ms)	Test Result
1	RCBO	16A SP	P / F / NA	P / F / NA	37.2	P / F / NA
2	RCBO	16A SP	P / F / NA	P / F / NA	27.6	P / F / NA
3	RCBO	16A SP	P / F / NA	P / F / NA	37.1	P / F / NA
4	RCBO	16A SP	P / F / NA	P / F / NA	36.7	P / F / NA
5	RCBO	16A SP	P / F / NA	P / F / NA	36.4	P / F / NA
6	RCBO	16A SP	P / F / NA	P / F / NA	26.9	P / F / NA
7	RCBO	16A SP	P / F / NA	P / F / NA	26.4	P / F / NA
8	RCBO	16A SP	P / F / NA	P / F / NA	27	P / F / NA
9	RCBO	16A SP	P / F / NA	P / F / NA	28	P / F / NA
10	RCBO	16A SP	P / F / NA	P / F / NA	26.7	P / F / NA

Remark: P / F / NA = Pass / Fail / Not Applicable
Tripping time of RCD for 30mA leakage current shall be within 300ms.

Comment:

Test / Checked By : REW No.: W133567 Grade H (Name of CTA Representative)	Name: Ho Tung	Signature:	Date: 17/09/2025
Witnessed By : (Name of JEC Representative)	Name: John Chan	Signature:	Date: 17/09/2025
Witnessed By : (Name of GCL)	Name: Ryan Lam	Signature:	Date: 17/09/2025
Witnessed By : (Name of AMMJV)	Name: Patrick Yung	Signature:	Date: 17/09/2025
Witnessed By : (Name of)	Name:	Signature:	Date:
Witnessed By : (Name of)	Name:	Signature:	Date:

Gammon

CTA INTERNATIONAL AS

Air Purification System – HV Power Supply Units Test & Commissioning Report			
Contract No.:	HY/2019/13	RISC No.:	36857
Project:	Central Kowloon Route - Buildings, Electrical and Mechanical	Date:	17/09/2025
Location:	YVB / HVB / KVB	Room Name:	HV Room 2
T&C Plan Ref. No:		Page:	
Ref. Dwg. No.:			

Part 3: Inspection and Test for Electrical Installations (Sheet 4 of 5)

D) Functional Test and Circuitry Check (TCP Section 4.5.3)

ESP HV Power Supply Cabinets Information

Cabinets ID:	HVB-APS3-ESP-PSC-01	Main Switch Rating:	80A
Location:	ESP HV Switch Room 01 / 02	Supply Fed From:	HVB-DB-ESP03

Circuit No. or Details of Equipment	Type of Protective Device	Rating	Isolator	MCB	RCD Test Button	Circuitry Check
1	RCBO	16A SP	P / F / NA	P / F / NA	P / F / NA	P / F / NA
2	RCBO	16A SP	P / F / NA	P / F / NA	P / F / NA	P / F / NA
3	RCBO	16A SP	P / F / NA	P / F / NA	P / F / NA	P / F / NA
4	RCBO	16A SP	P / F / NA	P / F / NA	P / F / NA	P / F / NA
5	RCBO	16A SP	P / F / NA	P / F / NA	P / F / NA	P / F / NA
6	RCBO	16A SP	P / F / NA	P / F / NA	P / F / NA	P / F / NA
7	RCBO	16A SP	P / F / NA	P / F / NA	P / F / NA	P / F / NA
8	RCBO	16A SP	P / F / NA	P / F / NA	P / F / NA	P / F / NA
9	RCBO	16A SP	P / F / NA	P / F / NA	P / F / NA	P / F / NA
10	RCBO	16A SP	P / F / NA	P / F / NA	P / F / NA	P / F / NA
Air conditioner	RCBO	16A SP	P / F / NA	P / F / NA	P / F / NA	P / F / NA

Remark: P / F / NA = Pass / Fail / Not Applicable

Comment:

Test / Checked By : REW No.: W133567 Grade H (Name of CTA Representative)	Name: Ho Tung	Signature:	Date: 17/09/2025
Witnessed By : (Name of JEC Representative)	Name: John Chan	Signature:	Date: 17/09/2025
Witnessed By : (Name of GCL)	Name: Ryan Law	Signature:	Date: 17/09/2025
Witnessed By : (Name of AMMTV)	Name: Patrick Yung	Signature:	Date: 17/09/2025
Witnessed By : (Name of)	Name:	Signature:	Date:
Witnessed By : (Name of)	Name:	Signature:	Date:

Gammon

CIA INTERNATIONAL AS CLEAN TUNNEL AIR

Air Purification System – HV Power Supply Units Test & Commissioning Report			
Contract No.:	HY/2019/13	RISC No.:	36857
Project:	Central Kowloon Route - Buildings, Electrical and Mechanical	Date:	17/09/2025
Location:	YVB / HVB / KVB	Room Name:	HV Room 2
T&C Plan Ref. No:		Page:	
Ref. Dwg. No.:			

Part 3: Inspection and Test for Electrical Installations (Sheet 4 of 5)

D) Functional Test and Circuitry Check (TCP Section 4.5.3)

ESP HV Power Supply Cabinets Information

Cabinets ID:	HVB-APS3-ESP-PSC-02	Main Switch Rating:	80A
Location:	ESP HV Switch Room 01 / 02	Supply Fed From:	HVB-DB-ESP03

Circuit No. or Details of Equipment	Type of Protective Device	Rating	Isolator	MCB	RCD Test Button	Circuitry Check
1	RCBO	16A SP	P / F / NA	P / F / NA	P / F / NA	P / F / NA
2	RCBO	16A SP	P / F / NA	P / F / NA	P / F / NA	P / F / NA
3	RCBO	16A SP	P / F / NA	P / F / NA	P / F / NA	P / F / NA
4	RCBO	16A SP	P / F / NA	P / F / NA	P / F / NA	P / F / NA
5	RCBO	16A SP	P / F / NA	P / F / NA	P / F / NA	P / F / NA
6	RCBO	16A SP	P / F / NA	P / F / NA	P / F / NA	P / F / NA
7	RCBO	16A SP	P / F / NA	P / F / NA	P / F / NA	P / F / NA
8	RCBO	16A SP	P / F / NA	P / F / NA	P / F / NA	P / F / NA
9	RCBO	16A SP	P / F / NA	P / F / NA	P / F / NA	P / F / NA
10	RCBO	16A SP	P / F / NA	P / F / NA	P / F / NA	P / F / NA
Air conditioner	RCBO	16A SP	P / F / NA	P / F / NA	P / F / NA	P / F / NA

Remark: P / F / NA = Pass / Fail / Not Applicable

Comment:

Test / Checked By : REW No.: W133567 Grade H (Name of CTA Representative)	Name: Ho Tung	Signature:	Date: 17/09/2025
Witnessed By : (Name of JEC Representative)	Name: John Chan	Signature:	Date: 17/09/2025
Witnessed By : (Name of GCL)	Name: Ryan Lin	Signature:	Date: 17/09/2025
Witnessed By : (Name of AMMJV)	Name: Patrick Yung	Signature:	Date: 17/09/2025
Witnessed By : (Name of)	Name:	Signature:	Date:
Witnessed By : (Name of)	Name:	Signature:	Date:

Gammon

CTA INTERNATIONAL AS CLEAN TUNNEL AIR

Air Purification System – HV Power Supply Units Test & Commissioning Report			
Contract No.:	HY/2019/13	RISC No.:	~~36855A~~ 36856A
Project:	Central Kowloon Route - Buildings, Electrical and Mechanical	Date:	14/08/2025
Location:	~~KVB~~ / HVB / ~~KVB~~	Room Name:	
T&C Plan Ref. No:	J3883-APS-S-I-17	Page:	
Ref. Dwg. No.:	J3883/MEP/APS/HVB/1603&1604&1605		

Part 2: Installation Inspection and Cable Tests for HV DC Cables (Sheet 1 of 2)

A) Visual Inspection (TCP Section 4.4.1)

Items	Description of Inspection	Test Result
a)	No visible damage to impair safety	(P) / F / NA
b)	Ensure all cables, HV connectors, cable glands & accessories are in good condition	(P) / F / NA
c)	All conductors are correctly and securely connected and identified, protected against mechanical damage, and adequately supported	(P) / F / NA

B) HV DC Cable Continuity Tests (TCP Section 4.4.2)

From: ESP HV Switch Room (01) / (02) To: APS Plenum No.01 / 02 / (03) Sub-assembly (A) / B / C / D / E

Items	Circuit No. or Details of Equipment	Cable Length (m)	Continuity Resistance (Ω) Measured	Calculated	Passing Criteria	Test Result
1	H VB-APS 3 -HVC- 01 Ionizer	46.5	0.98	0.49	1.14	(P) / F / NA
2	H VB-APS 3 -HVC- 02 Ionizer	46.5		0.49	1.14	(P) / F / NA
3	H VB-APS 3 -HVC- 03 Ionizer	45.5	0.96	0.48	1.11	(P) / F / NA
4	H VB-APS 3 -HVC- 04 Collector	45.5		0.48	1.11	(P) / F / NA

C) List of Testing Equipment / Instruments

Type	Model	Serial No	Calibration Cert. No	Date of Cert.
Digital Micro Ohmmeter	VT620C+	C242921984	ACZ202502220127	22/02/2025
Cable Fault Tester	LCT268-2(KM)	250219005	ACZ202503030802	22/02/2025

Remark: P / F / NA = Pass / Fail / Not Applicable
Insulation Resistance should be >1000MΩ, Continuity Resistance shall be < 0.0245Ω/m (B)

Comment: Calculation Formula = (Cable Length x Measured Resistance) / Total Cable Length
Passing Criteria = 0.0245*Cable Length

	Name:	Signature:	Date:
Test / Checked By : REW No.: W133567 Grade B+1 (Name of CTA Representative)	HO TUNG		14/08/2025
Witnessed By : (Name of JEC Representative)	John Chan		14/08/2025
Witnessed By : (Name of GCL)	Raymond Lau		14/08/2025
Witnessed By : (Name of AMNJV)	Andy Tang		14/08/2025
Witnessed By : (Name of)			
Witnessed By : (Name of)			

Gammon

CTA INTERNATIONAL AS CLEAN TUNNEL AIR

Air Purification System – HV Power Supply Units Test & Commissioning Report

Contract No.:	HY/2019/13	RISC No.:	~~36855A~~ 36856A
Project:	Central Kowloon Route - Buildings, Electrical and Mechanical	Date:	14/08/2025
Location:	~~HVB~~ / HVB / ~~KVB~~	Room Name:	
T&C Plan Ref. No:	J3883-APS-S-I-17	Page:	
Ref. Dwg. No.:	J3883/MEP/APS/HVB/1603&1604&1605		

Part 2: Installation Inspection and Cable Tests for HV DC Cables (2 of 2)

D) Maximum Voltage Withstand Test for HV DC Cable (TCP Section 4.4.3)

Step 1 & 3 - Insulation Resistance Test before and after the Maximum Voltage Withstand Test

From: ESP HV Switch Room (01) / 02 To: APS Plenum No.01 / 02 / (03) Sub-assembly (A) / B / C / D / E

Items	Circuit No. or Details of Equipment	Cable Length (m)	Insulation Resistance (MΩ) before Step 2	Insulation Resistance (MΩ) after Step 2	Test Result
1	H VB-APS 3 -HVC- 01 Ionizer	46.5	250G	226G	(P) / F / NA
2	H VB-APS 3 -HVC- 02 Ionizer	46.5	245G	255G	(P) / F / NA
3	H VB-APS 3 -HVC- 03 Ionizer	45.5	275G	225G	(P) / F / NA
4	H VB-APS 3 -HVC- 04 Collector	45.5	300G	300G	(P) / F / NA

Step 2 - Maximum Voltage Withstand Test

Items	Circuit No. or Details of Equipment	Test Voltage (kV DC)	Duration (Min)	Measured Voltage
1	H VB-APS 3 -HVC- 01 Ionizer	20	1	20.2 kV
2	H VB-APS 3 -HVC- 02 Ionizer	20	1	20.2 kV
3	H VB-APS 3 -HVC- 03 Ionizer	20	1	20.2 kV
4	H VB-APS 3 -HVC- 04 Collector	20	1	20.2 kV

E) List of Testing Equipment / Instruments

Type	Model	Serial No	Calibration Cert. No	Date of Cert.
HV Insulation Tester	AR3125	6819355	KSZ250212780001	26/02/2025
HV DC Voltage Meter	HVP-40DM	20240071	ACZ2202505030801	03/03/2025

Remark: P / F / NA = Pass / Fail / Not Applicable,
The passing criteria for the test is passing the insulation test after for maximum voltage withstand test.
The insulation resistance is over 1000MOhm (*) for HV DC Cable and 30MOhm for ESP Cell

Comment:

Test / Checked By : REW No.: W13350 Grade B+H (Name of CTA Representative)	Name: HO TUNG	Signature:	Date: 14/08/2025
Witnessed By : (Name of JEC Representative)	Name: John Chan	Signature:	Date: 14/08/2025
Witnessed By : (Name of GCL)	Name: Raymond Lau	Signature:	Date: 14/08/2025
Witnessed By : (Name of AMNJV)	Name: Andy Tang	Signature:	Date: 14/08/2025
Witnessed By : (Name of)	Name:	Signature:	Date:
Witnessed By : (Name of)	Name:	Signature:	Date:

Gammon

CTA INTERNATIONAL AS CLEAN TUNNEL AIR

Air Purification System – HV Power Supply Units Test & Commissioning Report			
Contract No.:	HY/2019/13	RISC No.:	~~36855A~~ 36856A
Project:	Central Kowloon Route - Buildings, Electrical and Mechanical	Date:	14/08/2025
Location:	~~YVB~~ / HVB / ~~KVB~~	Room Name:	
T&C Plan Ref. No:	J3883-APS-S-I-17	Page:	
Ref. Dwg. No.:	J3883/MEP/APS/HVB/1603&1604&1605		

Part 2: Installation Inspection and Cable Tests for HV DC Cables (Sheet 1 of 2)

A) Visual Inspection (TCP Section 4.4.1)

Items	Description of Inspection	Test Result
a)	No visible damage to impair safety	(P) / F / NA
b)	Ensure all cables, HV connectors, cable glands & accessories are in good condition	(P) / F / NA
c)	All conductors are correctly and securely connected and identified, protected against mechanical damage, and adequately supported	(P) / F / NA

B) HV DC Cable Continuity Tests (TCP Section 4.4.2)

From: ESP HV Switch Room (01) / (02) To: APS Plenum No.01 / 02 / (03) Sub-assembly A / (B) / C / D / E

Items	Circuit No. or Details of Equipment	Cable Length (m)	Continuity Resistance (Ω) Measured	Calculated	Passing Criteria	Test Result
1	H VB-APS 3 -HVC- 05 Ionizer	44.5	0.94	0.47	1.09	(P) / F / NA
2	H VB-APS 3 -HVC- 06 Ionizer	44.5		0.47	1.09	(P) / F / NA
3	H VB-APS 3 -HVC- 07 Ionizer	43.5	0.92	0.46	1.066	(P) / F / NA
4	H VB-APS 3 -HVC- 08 Collector	43.5		0.46	1.066	(P) / F / NA

C) List of Testing Equipment / Instruments

Type	Model	Serial No	Calibration Cert. No	Date of Cert.
Digital Micro Ohmmeter	VT620C+	C242921984	ACZ202502220127	22/02/2025
Cable Fault Tester	LCT268-2(KM)	250219005	ACZ202503030802	22/02/2025

Remark: P / F / NA = Pass / Fail / Not Applicable
Insulation Resistance should be >1000MΩ, Continuity Resistance shall be < 0.0245Ω/m (B)

Comment: Calculation Formula = (Cable Length x Measured Resistance) / Total Cable Length
Passing Criteria = 0.0245*Cable Length

Test / Checked By : REW No.: W133507 Grade B+11 (Name of CTA Representative)	Name: HO TUNG	Signature:	Date: 14/08/2025
Witnessed By : (Name of JEC Representative)	Name: John Chan	Signature:	Date: 14/08/2025
Witnessed By : (Name of GCL)	Name: Raymond Lau	Signature:	Date: 14/08/2025
Witnessed By : (Name of AMMJV)	Name: Andy Tang	Signature:	Date: 14/08/2025
Witnessed By : (Name of)	Name:	Signature:	Date:
Witnessed By : (Name of)	Name:	Signature:	Date:

Gammon

CTA INTERNATIONAL AS CLEAN TUNNEL AIR

Air Purification System – HV Power Supply Units Test & Commissioning Report			
Contract No.:	HY/2019/13	RISC No.:	~~36855A~~ 36856A
Project:	Central Kowloon Route - Buildings, Electrical and Mechanical	Date:	14/08/2025
Location:	~~YVB~~ / HVB / ~~KVB~~	Room Name:	
T&C Plan Ref. No:	J3883-APS-S-I-17	Page:	
Ref. Dwg. No.:	J3883/MEP/APS/HVB/1603&1604&1605		

Part 2: Installation Inspection and Cable Tests for HV DC Cables (2 of 2)

D) Maximum Voltage Withstand Test for HV DC Cable (TCP Section 4.4.3)

Step 1 & 3 - Insulation Resistance Test before and after the Maximum Voltage Withstand Test

From: ESP HV Switch Room 01 / 02 To: APS Plenum No.01 / 02 / 03 Sub-assembly A / B / C / D / E

Items	Circuit No. or Details of Equipment	Cable Length (m)	Insulation Resistance (MΩ) before Step 2	Insulation Resistance (MΩ) after Step 2	Test Result
1	H VB-APS 3 -HVC- 05 Ionizer	44.5	243G	295G	P / F / NA
2	H VB-APS 3 -HVC- 06 Ionizer	44.5	265G	284G	P / F / NA
3	H VB-APS 3 -HVC- 07 Ionizer	43.5	244G	275G	P / F / NA
4	H VB-APS 3 -HVC- 08 Collector	43.5	234G	235G	P / F / NA

Step 2 - Maximum Voltage Withstand Test

Items	Circuit No. or Details of Equipment	Test Voltage (kV DC)	Duration (Min)	Measured Voltage
1	H VB-APS 3 -HVC- 01 Ionizer	20	1	20.2 kV
2	H VB-APS 3 -HVC- 02 Ionizer	20	1	20.2 kV
3	H VB-APS 3 -HVC- 03 Ionizer	20	1	20.2 kV
4	H VB-APS 3 -HVC- 04 Collector	20	1	20.2 kV

E) List of Testing Equipment / Instruments

Type	Model	Serial No	Calibration Cert. No	Date of Cert.
HV Insulation Tester	AR3125	6819355	KSZ250212780001	26/02/2025
HV DC Voltage Meter	HVP-40DM	20240071	ACZ2202505030801	03/03/2025

Remark: P / F / NA = Pass / Fail / Not Applicable,
The passing criteria for the test is passing the insulation test after for maximum voltage withstand test.
The insulation resistance is over 1000MOhm (*) for HV DC Cable and 30MOhm for ESP Cell

Comment:

Test / Checked By : REW No.: W133587 Grade B+M (Name of CTA Representative)	Name: HO TUNG	Signature:	Date: 14/08/2025
Witnessed By : (Name of JEC Representative)	Name: John Chan	Signature:	Date: 14/08/2025
Witnessed By : (Name of GCL)	Name: Raymond Lau	Signature:	Date: 14/08/2025
Witnessed By : (Name of AMNOV)	Name: Andy Tang	Signature:	Date: 14/08/2025
Witnessed By : (Name of)	Name:	Signature:	Date:
Witnessed By : (Name of)	Name:	Signature:	Date:

Gammon

CTA INTERNATIONAL AS CLEAN TUNNEL AIR

Air Purification System – HV Power Supply Units Test & Commissioning Report			
Contract No.:	HY/2019/13	RISC No.:	~~36855A~~ 36856A (4)
Project:	Central Kowloon Route - Buildings, Electrical and Mechanical	Date:	14/08/2025
Location:	~~YVB~~ / HVB / ~~KVB~~	Room Name:	
T&C Plan Ref. No:	J3883-APS-S-I-17	Page:	
Ref. Dwg. No.:	J3883/MEP/APS/HVB/1603&1604&1605		

Part 2: Installation Inspection and Cable Tests for HV DC Cables (Sheet 1 of 2)

A) Visual Inspection (TCP Section 4.4.1)

Items	Description of Inspection	Test Result
a)	No visible damage to impair safety	(P) / F / NA
b)	Ensure all cables, HV connectors, cable glands & accessories are in good condition	(P) / F / NA
c)	All conductors are correctly and securely connected and identified, protected against mechanical damage, and adequately supported	(P) / F / NA

B) HV DC Cable Continuity Tests (TCP Section 4.4.2)

From: ESP HV Switch Room (01) / 02 (4) To: APS Plenum No.01 / 02 / (03) Sub-assembly A / B / (C) / D / E

Items	Circuit No. or Details of Equipment	Cable Length (m)	Continuity Resistance (Ω) Measured	Calculated	Passing Criteria	Test Result
1	H VB-APS 3 -HVC- 09 Ionizer	42.5	0.90	0.45	1.041	(P) / F / NA
2	H VB-APS 3 -HVC- 10 Ionizer	42.5		0.45	1.041	(P) / F / NA
3	H VB-APS 3 -HVC- 11 Ionizer	41.5	0.88	0.44	1.018	(P) / F / NA
4	H VB-APS 3 -HVC- 12 Collector	41.5		0.44	1.018	(P) / F / NA

C) List of Testing Equipment / Instruments

Type	Model	Serial No	Calibration Cert. No	Date of Cert.
Digital Micro Ohmmeter	VT620C+	C242921984	ACZ202502220127	22/02/2025
Cable Fault Tester	LCT268-2(KM)	250219005	ACZ202503030802	22/02/2025

Remark: P / F / NA = Pass / Fail / Not Applicable
Insulation Resistance should be >1000MΩ, Continuity Resistance shall be < 0.0245Ω/m (B)

Comment: Calculation Formula = (Cable Length x Measured Resistance) / Total Cable Length
Passing Criteria = 0.0245*Cable Length

Test / Checked By : REW No.: W133587 Grade B+H (Name of CTA Representative)	Name: HO TUNG	Signature:	Date: 14/08/2025
Witnessed By : (Name of JEC Representative)	Name: John Chan	Signature:	Date: 14/08/2025
Witnessed By : (Name of GCL)	Name: Raymond Lau	Signature:	Date: 14/08/2025
Witnessed By : (Name of AMTV)	Name: Andy Tang	Signature:	Date: 14/08/2025
Witnessed By : (Name of)	Name:	Signature:	Date:
Witnessed By : (Name of)	Name:	Signature:	Date:

Gammon

CTA INTERNATIONAL AS CLEAN TUNNEL AIR

Air Purification System – HV Power Supply Units Test & Commissioning Report

Contract No.:	HY/2019/13	RISC No.:	~~36855A~~ 36856A
Project:	Central Kowloon Route - Buildings, Electrical and Mechanical	Date:	14/08/2025
Location:	~~YVB~~ / HVB / ~~KVB~~	Room Name:	
T&C Plan Ref. No:	J3883-APS-S-I-17	Page:	
Ref. Dwg. No.:	J3883/MEP/APS/HVB/1603&1604&1605		

Part 2: Installation Inspection and Cable Tests for HV DC Cables (2 of 2)

D) Maximum Voltage Withstand Test for HV DC Cable (TCP Section 4.4.3)

Step 1 & 3 - Insulation Resistance Test before and after the Maximum Voltage Withstand Test

From: ESP HV Switch Room 01 / 02 To: APS Plenum No.01 / 02 / 03 Sub-assembly A / B / C / D / E

Items	Circuit No. or Details of Equipment	Cable Length (m)	Insulation Resistance (MΩ) before Step 2	Insulation Resistance (MΩ) after Step 2	Test Result
1	H VB-APS 3 -HVC- 09 Ionizer	42.5	220G	245G	P / F / NA
2	H VB-APS 3 -HVC- 10 Ionizer	42.5	255G	265G	P / F / NA
3	H VB-APS 3 -HVC- 11 Ionizer	41.5	275G	286G	P / F / NA
4	H VB-APS 3 -HVC- 12 Collector	41.5	295G	254G	P / F / NA

Step 2 - Maximum Voltage Withstand Test

Items	Circuit No. or Details of Equipment	Test Voltage (kV DC)	Duration (Min)	Measured Voltage
1	H VB-APS 3 -HVC- 09 Ionizer	20	1	20.2 kV
2	H VB-APS 3 -HVC- 10 Ionizer	20	1	20.2 kV
3	H VB-APS 3 -HVC- 11 Ionizer	20	1	20.2 kV
4	H VB-APS 3 -HVC- 12 Collector	20	1	20.2 kV

E) List of Testing Equipment / Instruments

Type	Model	Serial No	Calibration Cert. No	Date of Cert.
HV Insulation Tester	AR3125	6819355	KSZ250212780001	26/02/2025
HV DC Voltage Meter	HVP-40DM	20240071	ACZ2202505030801	03/03/2025

Remark: P / F / NA = Pass / Fail / Not Applicable,
The passing criteria for the test is passing the insulation test after for maximum voltage withstand test.
The insulation resistance is over 1000MOhm (*) for HV DC Cable and 30MOhm for ESP Cell

Comment:

Test / Checked By : REW No.: W133567 Grade B+1 (Name of CTA Representative)	Name: HO TUNG	Signature:	Date: 14/08/2025
Witnessed By : (Name of JEC Representative)	Name: John Chan	Signature:	Date: 14/08/2025
Witnessed By : (Name of GCL)	Name: Raymond Lau	Signature:	Date: 14/08/2025
Witnessed By : (Name of AMMJV)	Name: Andy Tang	Signature:	Date: 14/08/2025
Witnessed By : (Name of)	Name:	Signature:	Date:
Witnessed By : (Name of)	Name:	Signature:	Date:

Gammon

CTA INTERNATIONAL AS CLEAN TUNNEL AIR

Air Purification System – HV Power Supply Units Test & Commissioning Report			
Contract No.:	HY/2019/13	RISC No.:	~~36855A~~ 36856A
Project:	Central Kowloon Route - Buildings, Electrical and Mechanical	Date:	14/08/2025
Location:	~~JVB~~ / HVB / ~~KVB~~	Room Name:	
T&C Plan Ref. No:	J3883-APS-S-I-17	Page:	
Ref. Dwg. No.:	J3883/MEP/APS/HVB/1603&1604&1605		

Part 2: Installation Inspection and Cable Tests for HV DC Cables (Sheet 1 of 2)

A) Visual Inspection (TCP Section 4.4.1)

Items	Description of Inspection	Test Result
a)	No visible damage to impair safety	(P) / F / NA
b)	Ensure all cables, HV connectors, cable glands & accessories are in good condition	(P) / F / NA
c)	All conductors are correctly and securely connected and identified, protected against mechanical damage, and adequately supported	(P) / F / NA

B) HV DC Cable Continuity Tests (TCP Section 4.4.2)

From: ESP HV Switch Room (01) / 02 To: APS Plenum No.01 / 02 / (03) Sub-assembly A / B / C / (D) / E

Items	Circuit No. or Details of Equipment	Cable Length (m)	Continuity Resistance (Ω) Measured	Calculated	Passing Criteria	Test Result
1	H VB-APS 3 -HVC- 13 Ionizer	40.5	0.86	0.43	0.993	(P) / F / NA
2	H VB-APS 3 -HVC- 14 Ionizer	40.5		0.43	0.993	(P) / F / NA
3	H VB-APS 3 -HVC- 15 Ionizer	39.5	0.84	0.42	0.968	(P) / F / NA
4	H VB-APS 3 -HVC- 16 Collector	39.5		0.42	0.968	(P) / F / NA

C) List of Testing Equipment / Instruments

Type	Model	Serial No	Calibration Cert. No	Date of Cert.
Digital Micro Ohmmeter	VT620C+	C242921984	ACZ202502220127	22/02/2025
Cable Fault Tester	LCT268-2(KM)	250219005	ACZ202503030802	22/02/2025

Remark: P / F / NA = Pass / Fail / Not Applicable
Insulation Resistance should be >1000MΩ, Continuity Resistance shall be < 0.0245Ω/m (B)

Comment: Calculation Formula = (Cable Length x Measured Resistance) / Total Cable Length
Passing Criteria = 0.0245*Cable Length

Test / Checked By : REW No.: W133567 Grade B+M (Name of CTA Representative)	Name: HO TUNG	Signature:	Date: 14/08/2025
Witnessed By : (Name of JEC Representative)	Name: John Chan	Signature:	Date: 14/08/2025
Witnessed By : (Name of GCL)	Name: Raymond Lau	Signature:	Date: 14/08/2025
Witnessed By : (Name of AMMJV)	Name: Andy Tang	Signature:	Date: 14/08/2025
Witnessed By : (Name of)	Name:	Signature:	Date:
Witnessed By : (Name of)	Name:	Signature:	Date:

Gammon

CTA INTERNATIONAL A/S CLEAN TUNNEL A/S

Air Purification System – HV Power Supply Units Test & Commissioning Report			
Contract No.:	HY/2019/13	RISC No.:	~~36855A~~ 36856A
Project:	Central Kowloon Route - Buildings, Electrical and Mechanical	Date:	14/08/2025
Location:	~~YVB~~ / HVB / ~~KVB~~	Room Name:	
T&C Plan Ref. No:	J3883-APS-S-I-17	Page:	
Ref. Dwg. No.:	J3883/MEP/APS/HVB/1603&1604&1605		

Part 2: Installation Inspection and Cable Tests for HV DC Cables (2 of 2)

D) Maximum Voltage Withstand Test for HV DC Cable (TCP Section 4.4.3)

Step 1 & 3 - Insulation Resistance Test before and after the Maximum Voltage Withstand Test

From: ESP HV Switch Room 01 / 02 To: APS Plenum No.01 / 02 / 03 Sub-assembly A / B / C / D / E

Items	Circuit No. or Details of Equipment	Cable Length (m)	Insulation Resistance (MΩ) before Step 2	Insulation Resistance (MΩ) after Step 2	Test Result
1	H VB-APS 3 -HVC- 13 Ionizer	40.5	295G	286G	P / F / NA
2	H VB-APS 3 -HVC- 14 Ionizer	40.5	275G	267G	P / F / NA
3	H VB-APS 3 -HVC- 15 Ionizer	39.5	255G	247G	P / F / NA
4	H VB-APS 3 -HVC- 16 Collector	39.5	233G	226G	P / F / NA

Step 2 - Maximum Voltage Withstand Test

Items	Circuit No. or Details of Equipment	Test Voltage (kV DC)	Duration (Min)	Measured Voltage
1	H VB-APS 3 -HVC- 13 Ionizer	20	1	20.2 kV
2	H VB-APS 3 -HVC- 14 Ionizer	20	1	20.2 kV
3	H VB-APS 3 -HVC- 15 Ionizer	20	1	20.2 kV
4	H VB-APS 3 -HVC- 16 Collector	20	1	20.2 kV

E) List of Testing Equipment / Instruments

Type	Model	Serial No	Calibration Cert. No	Date of Cert.
HV Insulation Tester	AR3125	6819355	KSZ250212780001	26/02/2025
HV DC Voltage Meter	HVP-40DM	20240071	ACZ2202505030801	03/03/2025

Remark: P / F / NA = Pass / Fail / Not Applicable,
The passing criteria for the test is passing the insulation test after for maximum voltage withstand test.
The insulation resistance is over 1000MOhm (*) for HV DC Cable and 30MOhm for ESP Cell

Comment:

Test / Checked By : REW No.: W133567 Grade BtM (Name of CTA Representative)	Name: HO TUNG	Signature:	Date: 14/08/2025
Witnessed By : (Name of JEC Representative)	Name: John Chan	Signature:	Date: 14/08/2025
Witnessed By : (Name of GCL)	Name: Raymond Lau	Signature:	Date: 14/08/2025
Witnessed By : (Name of AMMJV)	Name: Andy Tang	Signature:	Date: 14/08/2025
Witnessed By : (Name of)	Name:	Signature:	Date:
Witnessed By : (Name of)	Name:	Signature:	Date:

Gammon

CTA INTERNATIONAL AS CLEAN TUNNEL AIR

Air Purification System – HV Power Supply Units Test & Commissioning Report			
Contract No.:	HY/2019/13	RISC No.:	~~36855A~~ 36856A
Project:	Central Kowloon Route - Buildings, Electrical and Mechanical	Date:	14/08/2025
Location:	~~VVB~~ / HVB / ~~KVB~~	Room Name:	
T&C Plan Ref. No:	J3883-APS-S-I-17	Page:	
Ref. Dwg. No.:	J3883/MEP/APS/HVB/1603&1604&1605		

Part 2: Installation Inspection and Cable Tests for HV DC Cables (Sheet 1 of 2)

A) Visual Inspection (TCP Section 4.4.1)

Items	Description of Inspection	Test Result
a)	No visible damage to impair safety	(P) / F / NA
b)	Ensure all cables, HV connectors, cable glands & accessories are in good condition	(P) / F / NA
c)	All conductors are correctly and securely connected and identified, protected against mechanical damage, and adequately supported	(P) / F / NA

B) HV DC Cable Continuity Tests (TCP Section 4.4.2)

From: ESP HV Switch Room (01) / 02 / ~~03~~ To: APS Plenum No.01 / 02 / (03) Sub-assembly A / B / C / D / (E)

Items	Circuit No. or Details of Equipment	Cable Length (m)	Continuity Resistance (Ω) Measured	Calculated	Passing Criteria	Test Result
1	H VB-APS 3 -HVC- 17 Ionizer	38.5	0.82	0.41	0.943	(P) / F / NA
2	H VB-APS 3 -HVC- 18 Ionizer	38.5		0.41	0.943	(P) / F / NA
3	H VB-APS 3 -HVC- 19 Ionizer	37.5	0.90	0.40	0.919	(P) / F / NA
4	H VB-APS 3 -HVC- 20 Collector	37.5		0.40	0.919	(P) / F / NA

C) List of Testing Equipment / Instruments

Type	Model	Serial No	Calibration Cert. No	Date of Cert.
Digital Micro Ohmmeter	VT620C+	C242921984	ACZ202502220127	22/02/2025
Cable Fault Tester	LCT268-2(KM)	250219005	ACZ202503030802	22/02/2025

Remark: P / F / NA = Pass / Fail / Not Applicable
Insulation Resistance should be >1000MΩ, Continuity Resistance shall be < 0.0245Ω/m (B)

Comment: Calculation Formula = (Cable Length x Measured Resistance) / Total Cable Length
Passing Criteria = 0.0245*Cable Length

Test / Checked By : REW No.: W133507 Grade B+H (Name of CTA Representative)	Name: HO TUNG	Signature:	Date: 14/08/2025
Witnessed By : (Name of JEC Representative)	Name: John Chan	Signature:	Date: 14/08/2025
Witnessed By : (Name of GCL)	Name: Raymond Lau	Signature:	Date: 14/08/2025
Witnessed By : (Name of AMNTV)	Name: Andy Tang	Signature:	Date: 14/08/2025
Witnessed By : (Name of)	Name:	Signature:	Date:
Witnessed By : (Name of)	Name:	Signature:	Date:

Gammon

CTA INTERNATIONAL AS CLEAN TUNNEL AIR

Air Purification System – HV Power Supply Units Test & Commissioning Report			
Contract No.:	HY/2019/13	RISC No.:	~~36355A~~ 36856A
Project:	Central Kowloon Route - Buildings, Electrical and Mechanical	Date:	14/08/2025
Location:	~~HVB~~ / HVB / ~~KVB~~	Room Name:	
T&C Plan Ref. No:	J3883-APS-S-I-17	Page:	
Ref. Dwg. No.:	J3883/MEP/APS/HVB/1603&1604&1605		

Part 2: Installation Inspection and Cable Tests for HV DC Cables (2 of 2)

D) Maximum Voltage Withstand Test for HV DC Cable (TCP Section 4.4.3)

Step 1 & 3 - Insulation Resistance Test before and after the Maximum Voltage Withstand Test

From: ESP HV Switch Room (01) / 02 / ~~03~~ To: APS Plenum No.01 / 02 / (03) Sub-assembly A / B / C / D / (E)

Items	Circuit No. or Details of Equipment	Cable Length (m)	Insulation Resistance (~~MΩ~~) before Step 2	Insulation Resistance (~~MΩ~~) after Step 2	Test Result
1	H VB-APS 3 -HVC- 17 Ionizer	38.5	214G	226G	(P) / F / NA
2	H VB-APS 3 -HVC- 18 Ionizer	38.5	335G	244G	(P) / F / NA
3	H VB-APS 3 -HVC- 19 Ionizer	37.5	253G	265G	(P) / F / NA
4	H VB-APS 3 -HVC- 20 Collector	37.5	274G	276G	(P) / F / NA

Step 2 - Maximum Voltage Withstand Test

Items	Circuit No. or Details of Equipment	Test Voltage (kV DC)	Duration (Min)	Measured Voltage
1	H VB-APS 3 -HVC- 17 Ionizer	20	1	20.2 kV
2	H VB-APS 3 -HVC- 18 Ionizer	20	1	20.2 kV
3	H VB-APS 3 -HVC- 19 Ionizer	20	1	20.2 kV
4	H VB-APS 3 -HVC- 20 Collector	20	1	20.2 kV

E) List of Testing Equipment / Instruments

Type	Model	Serial No	Calibration Cert. No	Date of Cert.
HV Insulation Tester	AR3125	6819355	KSZ250212780001	26/02/2025
HV DC Voltage Meter	HVP-40DM	20240071	ACZ2202505030801	03/03/2025

Remark: P / F / NA = Pass / Fail / Not Applicable,
The passing criteria for the test is passing the insulation test after for maximum voltage withstand test.
The insulation resistance is over 1000MOhm (*) for HV DC Cable and 30MOhm for ESP Cell

Comment:

Test / Checked By : REW No.: W133567 Grade 3+4 (Name of CTA Representative)	Name: HO TUNG	Signature:	Date: 14/08/2025
Witnessed By : (Name of JEC Representative)	Name: John Chan	Signature:	Date: 14/08/2025
Witnessed By : (Name of GCL)	Name: Raymond Lau	Signature:	Date: 14/08/2025
Witnessed By : (Name of AMJV)	Name: Andy Tang	Signature:	Date: 14/08/2025
Witnessed By : (Name of)	Name:	Signature:	Date:
Witnessed By : (Name of)	Name:	Signature:	Date:

Gammon

CTA INTERNATIONAL AS

Air Purification System – HV Power Supply Units Test & Commissioning Report			
Contract No.:	HY/2019/13	RISC No.:	36858
Project:	Central Kowloon Route - Buildings, Electrical and Mechanical	Date:	14/08/2025
Location:	~~YVB~~ / HVB / ~~KVB~~	Room Name:	
T&C Plan Ref. No:	J3883-APS-S-I-17	Page:	
Ref. Dwg. No.:	J3883/MEP/APS/HVB/1603&1604&1605		

Part 3: Inspection and Test for Electrical Installations (Sheet 1 of 5)

A) Continuity Test of ESP DC Earthing Conductor and 0V conductor (TCP Section 4.5.3)

Location: ESP HV Switch Room 01 / 02

Circuit No. or Details of Equipment	Continuity of Conductor (ohm)	Test Result
APS3-PSC-01 Main Earthing	0.1	P / F / NA
APS3-PSC-01 0V Earthing	0.1	P / F / NA
APS3-PSC-02 Main Earthing	0.1	P / F / NA
APS3-PSC-02 0V Earthing	0.1	P / F / NA
		P / F / NA
		P / F / NA
		P / F / NA
		P / F / NA
		P / F / NA
		P / F / NA
		P / F / NA

Remark: P / F / NA = Pass / Fail / Not Applicable
The Passing Criteria for Reading of Continuity test should be <1Ω

Comment:

Test / Checked By : REW No.: W133587 Grade 3+4 (Name of CTA Representative)	Name: HO TUNG	Signature: Ho Tung	Date: 14/08/2025
Witnessed By : (Name of JEC Representative)	Name: John Chan	Signature:	Date: 14/08/2025
Witnessed By : (Name of GCL)	Name: Boris Yan	Signature:	Date: 14/08/2025
Witnessed By : (Name of AMNJV)	Name: Andy Tang	Signature: Andy Tang	Date: 14/08/2025
Witnessed By : (Name of)	Name:	Signature:	Date:
Witnessed By : (Name of)	Name:	Signature:	Date:

Gammon

CTA INTERNATIONAL AS CLEAN TUNNEL AIR

Air Purification System – HV Power Supply Units Test & Commissioning Report			
Contract No.:	HY/2019/13	RISC No.:	36858 A
Project:	Central Kowloon Route - Buildings, Electrical and Mechanical	Date:	14/08/2025
Location:	~~XVB~~ / HVB / ~~KVB~~	Room Name:	
T&C Plan Ref. No:	J3883-APS-S-I-17	Page:	
Ref. Dwg. No.:	J3883/MEP/APS/HVB/1603&1604&1605		

Part 3: Inspection and Test for Electrical Installations (Sheet 2A of 5)

B) Earth Loop Impedance Test (TCP Section 4.5.3)

ESP HV Power Supply Cabinets Information

Cabinets ID:	H VB-APS 3 -ESP-PSC-0 1	Main Switch Rating:	80A
Location:	ESP HV Switch Room 01 / 02	Supply Fed From:	HVB-DB-ESP03-1

Circuit No	Details of Equipment	Type of Protective Device	Rating	Earth Loop Impedance (Zs) (Ω)	Test Result
1	H VB-APS 3 -PSU- 01 A Subassembly Ionizer 1	RCBO	16A SP	0.14	Ⓟ/ F / NA
2	H VB-APS 3 -PSU- 02 A Subassembly Ionizer 2	RCBO	16A SP	0.15	Ⓟ/ F / NA
3	H VB-APS 3 -PSU- 03 A Subassembly Ionizer 3	RCBO	16A SP	0.13	Ⓟ/ F / NA
4	H VB-APS 3 -PSU- 04 A Subassembly Collector	RCBO	16A SP	0.12	Ⓟ/ F / NA
5	H VB-APS 3 -PSU- 05 B Subassembly Ionizer 1	RCBO	16A SP	0.14	Ⓟ/ F / NA
6	H VB-APS 3 -PSU- 06 B Subassembly Ionizer 2	RCBO	16A SP	0.14	Ⓟ/ F / NA
7	H VB-APS 3 -PSU- 07 B Subassembly Ionizer 3	RCBO	16A SP	0.13	Ⓟ/ F / NA
8	H VB-APS 3 -PSU- 08 B Subassembly Collector	RCBO	16A SP	0.12	Ⓟ/ F / NA
9	H VB-APS 3 -PSU- 09 C Subassembly Ionizer 1	RCBO	16A SP	0.13	Ⓟ/ F / NA
10	H VB-APS 3 -PSU- 10 C Subassembly Ionizer 2	RCBO	16A SP	0.12	Ⓟ/ F / NA

Remark: P / F / NA = Pass / Fail / Not Applicable
The Passing Criteria for the Max Earth Fault Loop Independence shall refer to EMSD COP.

Comment:

Test / Checked By : REW No.: W133567 Grade BH1 (Name of CTA Representative)	Name: HO TUNG	Signature: Ho Tung	Date: 14/08/2025
Witnessed By : (Name of JEC Representative)	Name: John Chan	Signature:	Date: 14/08/2025
Witnessed By : (Name of GCL)	Name: Boris Yan	Signature:	Date: 14/08/2025
Witnessed By : (Name of AMNJV)	Name: Andy Tang	Signature: Ne Tang	Date: 14/08/2025
Witnessed By : (Name of)	Name:	Signature:	Date:
Witnessed By : (Name of)	Name:	Signature:	Date:

Gammon

CTA INTERNATIONAL AS CLEAN TUNNEL AIR

Air Purification System – HV Power Supply Units Test & Commissioning Report			
Contract No.:	HY/2019/13	RISC No.:	36858A
Project:	Central Kowloon Route - Buildings, Electrical and Mechanical	Date:	14/08/2025
Location:	~~YVB~~ / HVB / ~~KVB~~	Room Name:	
T&C Plan Ref. No:	J3883-APS-S-I-17	Page:	
Ref. Dwg. No.:	J3883/MEP/APS/HVB/1603&1604&1605		

Part 3: Inspection and Test for Electrical Installations (Sheet 2A of 5)

B) Earth Loop Impedance Test (TCP Section 4.5.3)

ESP HV Power Supply Cabinets Information

Cabinets ID:	H VB-APS 3 -ESP-PSC-0 2	Main Switch Rating:	80A
Location:	ESP HV Switch Room 01 / 02	Supply Fed From:	HVB-DB-ESP03-2

Circuit No	Details of Equipment	Type of Protective Device	Rating	Earth Loop Impedance (Zs) (Ω)	Test Result
1	H VB-APS 3 -PSU- 11 C Subassembly Ionizer 3	RCBO	16A SP	0.15	Ⓟ/ F / NA
2	H VB-APS 3 -PSU- 12 C Subassembly Collector	RCBO	16A SP	0.12	Ⓟ/ F / NA
3	H VB-APS 3 -PSU- 13 D Subassembly Ionizer 1	RCBO	16A SP	0.12	Ⓟ/ F / NA
4	H VB-APS 3 -PSU- 14 D Subassembly Ionizer 2	RCBO	16A SP	0.13	Ⓟ/ F / NA
5	H VB-APS 3 -PSU- 15 D Subassembly Ionizer 3	RCBO	16A SP	0.12	Ⓟ/ F / NA
6	H VB-APS 3 -PSU- 16 D Subassembly Collector	RCBO	16A SP	0.13	Ⓟ/ F / NA
7	H VB-APS 3 -PSU- 17 E Subassembly Ionizer 1	RCBO	16A SP	0.12	Ⓟ/ F / NA
8	H VB-APS 3 -PSU- 18 E Subassembly Ionizer 2	RCBO	16A SP	0.14	Ⓟ/ F / NA
9	H VB-APS 3 -PSU- 19 E Subassembly Ionizer 3	RCBO	16A SP	0.12	Ⓟ/ F / NA
10	H VB-APS 3 -PSU- 20 E Subassembly Collector	RCBO	16A SP	0.12	Ⓟ/ F / NA

Remark: P / F / NA = Pass / Fail / Not Applicable
The Passing Criteria for the Max Earth Fault Loop Independence shall refer to EMSD COP.

Comment:

Test / Checked By : REW No.: W133587 Grade B+4 (Name of CTA Representative)	Name: HO TUNG	Signature: Ho Tung	Date: 14/08/2025
Witnessed By : (Name of JEC Representative)	Name: John Chan	Signature:	Date: 14/08/2025
Witnessed By : (Name of GCL)	Name: Boris Yan	Signature:	Date: 14/08/2025
Witnessed By : (Name of AMNSV)	Name: Andy Tang	Signature: Andy Tang	Date: 14/08/2025
Witnessed By : (Name of)	Name:	Signature:	Date:
Witnessed By : (Name of)	Name:	Signature:	Date:

Gammon

CTA INTERNATIONAL AS CLEAN TUNNEL AIR

Air Purification System – HV Power Supply Units Test & Commissioning Report			
Contract No.:	HY/2019/13	RISC No.:	36858A
Project:	Central Kowloon Route - Buildings, Electrical and Mechanical	Date:	14/08/2025
Location:	~~YVB~~ / HVB / ~~KVB~~	Room Name:	
T&C Plan Ref. No:	J3883-APS-S-I-17	Page:	
Ref. Dwg. No.:	J3883/MEP/APS/HVB/1603&1604&1605		

Part 3: Inspection and Test for Electrical Installations (Sheet 3 of 5)

C) Functional Test of Residual Current Device (RCD) (TCP Section 4.5.3)

ESP HV Power Supply Cabinets Information

Cabinets ID:	H VB-APS 3 -ESP-PSC-0 1	Main Switch Rating:	80A
Location:	ESP HV Switch Room 01 / (02)	Supply Fed From:	HVB-DB-ESP03-1

Circuit No. or Details of Equipment	Type of Protective Device	Rating	Polarity	RCD 50% (ms)	RCD 100% (ms)	Test Result
1	RCBO	16A SP	(P)/ F / NA	(P)/ F / NA	27.1	(P)/ F / NA
2	RCBO	16A SP	(P)/ F / NA	(P)/ F / NA	37.3	(P)/ F / NA
3	RCBO	16A SP	(P)/ F / NA	(P)/ F / NA	33.1	(P)/ F / NA
4	RCBO	16A SP	(P)/ F / NA	(P)/ F / NA	33.3	(P)/ F / NA
5	RCBO	16A SP	(P)/ F / NA	(P)/ F / NA	27.5	(P)/ F / NA
6	RCBO	16A SP	(P)/ F / NA	(P)/ F / NA	37.2	(P)/ F / NA
7	RCBO	16A SP	(P)/ F / NA	(P)/ F / NA	27.4	(P)/ F / NA
8	RCBO	16A SP	(P)/ F / NA	(P)/ F / NA	35.1	(P)/ F / NA
9	RCBO	16A SP	(P)/ F / NA	(P)/ F / NA	37.1	(P)/ F / NA
10	RCBO	16A SP	(P)/ F / NA	(P)/ F / NA	32.1	(P)/ F / NA

Remark: P / F / NA = Pass / Fail / Not Applicable
Tripping time of RCD for 30mA leakage current shall be within 300ms.

Comment:

Test / Checked By : REW No.: W133567 Grade 5+4 (Name of CTA Representative)	Name: HO TUNG	Signature: Ho Tung	Date: 14/08/2025
Witnessed By : (Name of JEC Representative)	Name: John Chan	Signature:	Date: 14/08/2025
Witnessed By : (Name of GCL)	Name: Boris Yan	Signature:	Date: 14/08/2025
Witnessed By : (Name of AMMJV)	Name: Andy Tang	Signature: Andy Tang	Date: 14/08/2025
Witnessed By : (Name of)	Name:	Signature:	Date:
Witnessed By : (Name of)	Name:	Signature:	Date:

Gammon

CTA INTERNATIONAL AS CLEAN TUNNEL AIR

Air Purification System – HV Power Supply Units Test & Commissioning Report			
Contract No.:	HY/2019/13	RISC No.:	36858A
Project:	Central Kowloon Route - Buildings, Electrical and Mechanical	Date:	14/08/2025
Location:	~~YVB~~ / HVB / ~~KVB~~	Room Name:	
T&C Plan Ref. No:	J3883-APS-S-I-17	Page:	
Ref. Dwg. No.:	J3883/MEP/APS/HVB/1603&1604&1605		

Part 3: Inspection and Test for Electrical Installations (Sheet 3 of 5)

C) Functional Test of Residual Current Device (RCD) (TCP Section 4.5.3)

ESP HV Power Supply Cabinets Information

Cabinets ID:	H VB-APS 3 -ESP-PSC-0 2	Main Switch Rating:	80A
Location:	ESP HV Switch Room 01 / 02	Supply Fed From:	HVB-DB-ESP03-2

Circuit No. or Details of Equipment	Type of Protective Device	Rating	Polarity	RCD 50% (ms)	RCD 100% (ms)	Test Result
1	RCBO	16A SP	P / F / NA	P / F / NA	37.1	P / F / NA
2	RCBO	16A SP	P / F / NA	P / F / NA	27.3	P / F / NA
3	RCBO	16A SP	P / F / NA	P / F / NA	25.1	P / F / NA
4	RCBO	16A SP	P / F / NA	P / F / NA	38.3	P / F / NA
5	RCBO	16A SP	P / F / NA	P / F / NA	25.1	P / F / NA
6	RCBO	16A SP	P / F / NA	P / F / NA	37.4	P / F / NA
7	RCBO	16A SP	P / F / NA	P / F / NA	27.5	P / F / NA
8	RCBO	16A SP	P / F / NA	P / F / NA	33.6	P / F / NA
9	RCBO	16A SP	P / F / NA	P / F / NA	27.8	P / F / NA
10	RCBO	16A SP	P / F / NA	P / F / NA	32.1	P / F / NA

Remark: P / F / NA = Pass / Fail / Not Applicable
Tripping time of RCD for 30mA leakage current shall be within 300ms.

Comment:

	Name:	Signature:	Date:
Test / Checked By : REW No.: W133567 Grade B+1 (Name of CTA Representative)	HO TUNG	Ho Tung	14/08/2025
Witnessed By : (Name of JEC Representative)	John Chan		14/08/2025
Witnessed By : (Name of GCL)	Boris Yan		14/08/2025
Witnessed By : (Name of AMMJV)	Andy Tang	Andy Tang	14/08/2025
Witnessed By : (Name of)			
Witnessed By : (Name of)			

Gammon

CTA INTERNATIONAL A/S CLEAN TUNNEL A/S

Air Purification System – HV Power Supply Units Test & Commissioning Report			
Contract No.:	HY/2019/13	RISC No.:	36858
Project:	Central Kowloon Route - Buildings, Electrical and Mechanical	Date:	14/08/2025
Location:	~~XVB~~ / HVB / ~~KVB~~	Room Name:	
T&C Plan Ref. No:	J3883-APS-S-I-17	Page:	
Ref. Dw. No.:	J3883/MEP/APS/HVB/1603&1604&1605		

Part 3: Inspection and Test for Electrical Installations (Sheet 4 of 5)

D) Functional Test and Circuitry Check (TCP Section 4.5.3)

ESP HV Power Supply Cabinets Information

Cabinets ID:	H VB-APS 3 -ESP-PSC-0 1	Main Switch Rating:	80A
Location:	ESP HV Switch Room 01 / 02	Supply Fed From:	HVB-DB-ESP03-1

Circuit No. or Details of Equipment	Type of Protective Device	Rating	Isolator	MCB	RCD Test Button	Circuitry Check
1	RCBO	16A SP	P / F / NA	P / F / NA	P / F / NA	P / F / NA
2	RCBO	16A SP	P / F / NA	P / F / NA	P / F / NA	P / F / NA
3	RCBO	16A SP	P / F / NA	P / F / NA	P / F / NA	P / F / NA
4	RCBO	16A SP	P / F / NA	P / F / NA	P / F / NA	P / F / NA
5	RCBO	16A SP	P / F / NA	P / F / NA	P / F / NA	P / F / NA
6	RCBO	16A SP	P / F / NA	P / F / NA	P / F / NA	P / F / NA
7	RCBO	16A SP	P / F / NA	P / F / NA	P / F / NA	P / F / NA
8	RCBO	16A SP	P / F / NA	P / F / NA	P / F / NA	P / F / NA
9	RCBO	16A SP	P / F / NA	P / F / NA	P / F / NA	P / F / NA
10	RCBO	16A SP	P / F / NA	P / F / NA	P / F / NA	P / F / NA
A/C Unit	RCBO	16A SP	P / F / NA	P / F / NA	P / F / NA	P / F / NA

Remark: P / F / NA = Pass / Fail / Not Applicable

Comment:

Test / Checked By : REW No.: W133867 Grade BT/T (Name of CTA Representative)	Name: HO TUNG	Signature: Ho Tung	Date: 14/08/2025
Witnessed By : (Name of JEC Representative)	Name: John Chan	Signature:	Date: 14/08/2025
Witnessed By : (Name of GCL)	Name: Boris Yan	Signature:	Date: 14/08/2025
Witnessed By : (Name of AMNJV)	Name: Andy Tang	Signature:	Date: 14/08/2025
Witnessed By : (Name of)	Name:	Signature:	Date:
Witnessed By : (Name of)	Name:	Signature:	Date:

Gammon

CTA INTERNATIONAL AS CLEAN TUNNEL AIR

Air Purification System – HV Power Supply Units Test & Commissioning Report			
Contract No.:	HY/2019/13	RISC No.:	36858 A
Project:	Central Kowloon Route - Buildings, Electrical and Mechanical	Date:	14/08/2025
Location:	~~YVB~~ / HVB / ~~KVB~~	Room Name:	
T&C Plan Ref. No:	J3883-APS-S-I-17	Page:	
Ref. Dwg. No.:	J3883/MEP/APS/HVB/1603&1604&1605		

Part 3: Inspection and Test for Electrical Installations (Sheet 4 of 5)

D) Functional Test and Circuitry Check (TCP Section 4.5.3)

ESP HV Power Supply Cabinets Information

Cabinets ID:	H VB-APS 3 -ESP-PSC-0 2	Main Switch Rating:	80A
Location:	ESP HV Switch Room 01 / 02	Supply Fed From:	HVB-DB-ESP03-2

Circuit No. or Details of Equipment	Type of Protective Device	Rating	Isolator	MCB	RCD Test Button	Circuitry Check
1	RCBO	16A SP	P / F / NA	P / F / NA	P / F / NA	P / F / NA
2	RCBO	16A SP	P / F / NA	P / F / NA	P / F / NA	P / F / NA
3	RCBO	16A SP	P / F / NA	P / F / NA	P / F / NA	P / F / NA
4	RCBO	16A SP	P / F / NA	P / F / NA	P / F / NA	P / F / NA
5	RCBO	16A SP	P / F / NA	P / F / NA	P / F / NA	P / F / NA
6	RCBO	16A SP	P / F / NA	P / F / NA	P / F / NA	P / F / NA
7	RCBO	16A SP	P / F / NA	P / F / NA	P / F / NA	P / F / NA
8	RCBO	16A SP	P / F / NA	P / F / NA	P / F / NA	P / F / NA
9	RCBO	16A SP	P / F / NA	P / F / NA	P / F / NA	P / F / NA
10	RCBO	16A SP	P / F / NA	P / F / NA	P / F / NA	P / F / NA
A/C Unit	RCBO	16A SP	P / F / NA	P / F / NA	P / F / NA	P / F / NA

Remark: P / F / NA = Pass / Fail / Not Applicable

Comment:

Test / Checked By : REW No.: W135587 Grade B+/4 (Name of CTA Representative)	Name: HO TUNG	Signature: Ho Tung	Date: 14/08/2025
Witnessed By : (Name of JEC Representative)	Name: John Chan	Signature:	Date: 14/08/2025
Witnessed By : (Name of GCL)	Name: Boris Yan	Signature:	Date: 14/08/2025
Witnessed By : (Name of AMMJV)	Name: Andy Tang	Signature: Andy Tang	Date: 14/08/2025
Witnessed By : (Name of)	Name:	Signature:	Date:
Witnessed By : (Name of)	Name:	Signature:	Date:

Gammon

CTA INTERNATIONAL AS CLEAN TUNNEL AIR

Air Purification System – HV Power Supply Units Test & Commissioning Report			
Contract No.:	HY/2019/13	RISC No.:	36858A
Project:	Central Kowloon Route - Buildings, Electrical and Mechanical	Date:	14/08/2025
Location:	~~XVB~~ / HVB / ~~KVB~~	Room Name:	
T&C Plan Ref. No:	J3883-APS-S-I-17	Page:	
Ref. Dwg. No.:	J3883/MEP/APS/HVB/1603&1604&1605		

Part 3: Inspection and Test for Electrical Installations (Sheet 5 of 5)

E) Bonding Continuity Test

	Equipment Description	Equipotential Bonding (Ω)	Supplementary Bonding (Ω)	Test Result
APS3-PSC-01	Main Earthing Terminal	0.1	N/A	(P) / F / NA
	Cabient Door	N/A	0.1	(P) / F / NA
	Trunking	N/A	0.1	(P) / F / NA
	Cable Tray	N/A	0.1	(P) / F / NA
	PSU case	N/A	0.1	(P) / F / NA
				P / F / NA
APS3-PSC-02	Main Earthing Terminal	0.1	N/A	(P) / F / NA
	Cabient Door	N/A	0.1	(P) / F / NA
	Trunking	N/A	0.1	(P) / F / NA
	Cable Tray	N/A	0.1	(P) / F / NA
	PSU case	N/A	0.1	(P) / F / NA
				P / F / NA
				P / F / NA
				P / F / NA
				P / F / NA

Remark: P / F / NA = Pass / Fail / Not Applicable
The Passing Criteria of the Reading of Continuity test should be <1Ω.

Comment:

Test / Checked By : REW No.: W133367 Grade B+4 (Name of CTA Representative)	Name: HO TUNG	Signature: Ho Tung	Date: 14/08/2025
Witnessed By : (Name of JEC Representative)	Name: John Chan	Signature:	Date: 14/08/2025
Witnessed By : (Name of GCL)	Name: Boris Yan	Signature:	Date: 14/08/2025
Witnessed By : (Name of AMNJV)	Name: Andy Tang	Signature:	Date: 14/08/2025
Witnessed By : (Name of)	Name:	Signature:	Date:
Witnessed By : (Name of)	Name:	Signature:	Date:

Gammon

CTA INTERNATIONAL AS CLEAN TUNNEL AIR

Air Purification System – HV Power Supply Units Test & Commissioning Report			
Contract No.:	HY/2019/13	RISC No.:	36860A
Project:	Central Kowloon Route - Buildings, Electrical and Mechanical	Date:	14/08/2025
Location:	~~KVB~~ / HVB / ~~KVB~~	Room Name:	
T&C Plan Ref. No:	J3883-TVS-S-I17	Page:	
Ref. Dwg. No.:	J3883-MEP-APS-HVB-1604 & 1605 & 1606		

Part 4 : Functional and Performance Tests for HV Power Supply Units (Sheet 1 of 5)

A) Maximum Voltage Withstand Test for ESP Cell (TCP Section 4.6.1)

From:	ESP HV Switch Room 01 / 02	To:	APS Plenum No.01 / 02 / 03 Sub-assembly A / ~~B / C / D / E~~

Step 1 & 3 - Insulation Resistance Test before and after the Maximum Voltage Withstand Test

Items	Circuit No. or Details of Equipment	Insulation Resistance (MΩ)	
		Before Max. Withstand Tests	After Max. Withstand Tests
1	Sub-Assembly A (1st Col. Ionizer to Earth)	262G (Lower 3 ESP Cell) / 273G (Upper 3 ESP Cell)	272G (Lower 3 ESP Cell) / 278G (Upper 3 ESP Cell)
2	Sub-Assembly A (2nd Col. Ionizer to Earth)	250G (Lower 3 ESP Cell) / 263G (Upper 3 ESP Cell)	265G (Lower 3 ESP Cell) / 266G (Upper 3 ESP Cell)
3	Sub-Assembly A (3rd Col. Ionizer to Earth)	248G (Lower 3 ESP Cell) / 255G (Upper 3 ESP Cell)	267G (Lower 3 ESP Cell) / 266G (Upper 3 ESP Cell)
4	Sub-Assembly A (1st to 3rd Col. Collector the Earth)	281G (1st Col.) / 271G (2nd Col.) / 256G (3rd Col.)	271G (1st Col.) / 255G (2nd Col.) / 240G (3rd Col.)

Step 2 - Maximum Voltage Withstand Test

Items	Test Voltage (kV DC)	Duration (min)	Measured Voltage (kV DC)	Test Result
1	20 (Ionizer)	1	20.2	P / F / NA
2	20 (Ionizer)		20.2	P / F / NA
3	20 (Ionizer)		20.2	P / F / NA
4	8 (Collector)	1	7.2	P / F / NA

B) List of Testing Equipment / Instruments

Type	Model	Serial No	Calibration Cert. No	Date of Cert.
HV insulation tester	AR3125	6819355	KSZS25021278D001	26/02/2025
DC Voltage Meter	HVP-40DM	20230668	ZD202508111226	11/08/2025

Remark: P / F / NA = Pass / Fail / Not Applicable
The passing criteria for the test is passing the insulation test after for maximum voltage withstand test.
The insulation resistance is over 1000MOhm (*) for HV DC Cable and 30MOhm for ESP Cell

Comment:

	Name:	Signature:	Date:
Test / Checked By : REW No.: W133567 Grade: BH (Name of CTA Representative)	Ho Tung	Ho Tung	14/8/25
Witnessed By : (Name of JEC Representative)	John Chan		14/8/25
Witnessed By : (Name of GCL)	Boris Yan		14/8/25
Witnessed By : (Name of AMMJV)	Andy Tang	Andy Tang	14/8/25
Witnessed By : (Name of)			
Witnessed By : (Name of)			

Gammon

CTA INTERNATIONAL AS CLEAN TUNNEL AIR

Air Purification System – HV Power Supply Units Test & Commissioning Report

Contract No.:	HY/2019/13	RISC No.:	3686 UA
Project:	Central Kowloon Route - Buildings, Electrical and Mechanical	Date:	14/08/2025
Location:	~~VVB~~ / HVB / ~~RVB~~	Room Name:	
T&C Plan Ref. No:	J3883-TVS-S-I17	Page:	
Ref. Dwg. No.:	J3883-MEP-APS-HVB-1604 & 1605 & 1606		

Part 4 : Functional and Performance Tests for HV Power Supply Units (Sheet 1 of 5)

A) Maximum Voltage Withstand Test for ESP Cell (TCP Section 4.6.1)

From:	ESP HV Switch Room 01 / 02	To:	APS Plenum No.01 / 02 / 03 Sub-assembly A / ~~B / C / D / E~~ B

Step 1 & 3 - Insulation Resistance Test before and after the Maximum Voltage Withstand Test

Items	Circuit No. or Details of Equipment	Insulation Resistance (MΩ)	
		Before Max. Withstand Tests	After Max. Withstand Tests
1	Sub-Assembly B (1st Col. Ionizer to Earth)	255G (Lower 3 ESP Cell) / 243G (Upper 3 ESP Cell)	262G (Lower 3 ESP Cell) / 270G (Upper 3 ESP Cell)
2	Sub-Assembly B (2nd Col. Ionizer to Earth)	278G (Lower 3 ESP Cell) / 266G (Upper 3 ESP Cell)	270G (Lower 3 ESP Cell) / 265G (Upper 3 ESP Cell)
3	Sub-Assembly B (3rd Col. Ionizer to Earth)	266G (Lower 3 ESP Cell) / 273G (Upper 3 ESP Cell)	251G (Lower 3 ESP Cell) / 259G (Upper 3 ESP Cell)
4	Sub-Assembly B (1st to 3rd Col. Collector the Earth)	223G (1st Col.) 234G (2nd Col.) 203G (3rd Col.)	215G (1st Col.) / 226G (2nd Col.) / 228G (3rd Col.)

Step 2 - Maximum Voltage Withstand Test

Items	Test Voltage (kV DC)	Duration (min)	Measured Voltage (kV DC)	Test Result
1	20 (Ionizer)	1	20.2	P / F / NA
2	20 (Ionizer)		20.2	P / F / NA
3	20 (Ionizer)		20.2	P / F / NA
4	8 (Collector)	1	7.2	P / F / NA

B) List of Testing Equipment / Instruments

Type	Model	Serial No	Calibration Cert. No	Date of Cert.
HV insulation tester	AR3125	6819355	KSZS25021278D001	26/02/2025
DC Voltage Meter	HVP-40DM	20230668	ZD202508111226	11/08/2025

Remark: P / F / NA = Pass / Fail / Not Applicable
The passing criteria for the test is passing the insulation test after for maximum voltage withstand test.
The insulation resistance is over 1000MOhm (*) for HV DC Cable and 30MOhm for ESP Cell

Comment:

Test / Checked By : REW No.: W133567 Grade: 4/1 (Name of CTA Representative)	Name: Ho Tung	Signature: Ho Tung	Date: 14/8/25
Witnessed By : (Name of JEC Representative)	Name: John Chan	Signature:	Date: 14/8/25
Witnessed By : (Name of GCL)	Name: Boris Yan	Signature:	Date: 14/8/25
Witnessed By : (Name of AMMJV)	Name: Andy Tang	Signature: Andy Tang	Date: 14/8/25
Witnessed By : (Name of)	Name:	Signature:	Date:
Witnessed By : (Name of)	Name:	Signature:	Date:

Gammon

CTA INTERNATIONAL AS

Air Purification System – HV Power Supply Units Test & Commissioning Report			
Contract No.:	HY/2019/13	RISC No.:	36860A
Project:	Central Kowloon Route - Buildings, Electrical and Mechanical	Date:	14/08/2025
Location:	~~YVB~~ / HVB / ~~RVB~~	Room Name:	
T&C Plan Ref. No:	J3883-TVS-S-I17	Page:	
Ref. Dwg. No.:	J3883-MEP-APS-HVB-1604 & 1605 & 1606		

Part 4 : Functional and Performance Tests for HV Power Supply Units (Sheet 1 of 5)

A) Maximum Voltage Withstand Test for ESP Cell (TCP Section 4.6.1)

From:	ESP HV Switch Room 01 / 02	To:	APS Plenum No.01 / 02 / 03 Sub-assembly ~~A / B / C / D / E~~ C

Step 1 & 3 - Insulation Resistance Test before and after the Maximum Voltage Withstand Test

Items	Circuit No. or Details of Equipment	Insulation Resistance (MΩ)	
		Before Max. Withstand Tests	After Max. Withstand Tests
1	Sub-Assembly C (1st Col. Ionizer to Earth)	242 G (Lower 3 ESP Cell) / 275 G (Upper 3 ESP Cell)	238 G (Lower 3 ESP Cell) / 266 G (Upper 3 ESP Cell)
2	Sub-Assembly C (2nd Col. Ionizer to Earth)	256 G (Lower 3 ESP Cell) / 266 G (Upper 3 ESP Cell)	273 G (Lower 3 ESP Cell) / 280 G (Upper 3 ESP Cell)
3	Sub-Assembly C (3rd Col. Ionizer to Earth)	277 G (Lower 3 ESP Cell) / 263 G (Upper 3 ESP Cell)	268 G (Lower 3 ESP Cell) / 274 G (Upper 3 ESP Cell)
4	Sub-Assembly C (1st to 3rd Col. Collector the Earth)	280 G (1st Col.) / 266 G (2nd Col.) / 271 G (3rd Col.)	241 G (1st Col.) / 235 G (2nd Col.) / 260 G (3rd Col.)

Step 2 - Maximum Voltage Withstand Test

Items	Test Voltage (kV DC)	Duration (min)	Measured Voltage (kV DC)	Test Result
1	20 (Ionizer)	1	20.2	P / F / NA
2	20 (Ionizer)		20.2	P / F / NA
3	20 (Ionizer)		20.2	P / F / NA
4	8 (Collector)	1	7.2	P / F / NA

B) List of Testing Equipment / Instruments

Type	Model	Serial No	Calibration Cert. No	Date of Cert.
HV insulation tester	AR3125	6819355	KSZS25021278D001	26/02/2025
DC Voltage Meter	HVP-40DM	20230668	ZD202508111226	11/08/2025

Remark: P / F / NA = Pass / Fail / Not Applicable
The passing criteria for the test is passing the insulation test after for maximum voltage withstand test.
The insulation resistance is over 1000MOhm (*) for HV DC Cable and 30MOhm for ESP Cell

Comment:

	Name:	Signature:	Date:
Test / Checked By : REW No.: W133569 Grade: 5/4 (Name of CTA Representative)	Ho Tung	Ho Tung	14/8/25
Witnessed By : (Name of JEC Representative)	John Chan		14/8/25
Witnessed By : (Name of GCL)	Boris Yan		14/8/25
Witnessed By : (Name of AMMJV)	Andy Tang	Andy Tang	14/8/25
Witnessed By : (Name of)			
Witnessed By : (Name of)			

Gammon

CTA INTERNATIONAL AS CLEAN TUNNEL AIR

Air Purification System – HV Power Supply Units Test & Commissioning Report			
Contract No.:	HY/2019/13	RISC No.:	36860A
Project:	Central Kowloon Route - Buildings, Electrical and Mechanical	Date:	14/08/2025
Location:	~~HVB~~ / HVB / ~~HVB~~	Room Name:	
T&C Plan Ref. No:	J3883-TVS-S-I17	Page:	
Ref. Dwg. No.:	J3883-MEP-APS-HVB-1604 & 1605 & 1606		

Part 4 : Functional and Performance Tests for HV Power Supply Units (Sheet 1 of 5)

A) Maximum Voltage Withstand Test for ESP Cell (TCP Section 4.6.1)

From:	ESP HV Switch Room 01 / 02	To:	APS Plenum No.01 / 02 / 03 Sub-assembly A / ~~B / C / D / E~~ D

Step 1 & 3 - Insulation Resistance Test before and after the Maximum Voltage Withstand Test

Items	Circuit No. or Details of Equipment	Insulation Resistance (MΩ)	
		Before Max. Withstand Tests	After Max. Withstand Tests
1	Sub-Assembly D (1st Col. Ionizer to Earth)	270 G (Lower 3 ESP Cell) / 235 G (Upper 3 ESP Cell)	240 G (Lower 3 ESP Cell) / 216 G (Upper 3 ESP Cell)
2	Sub-Assembly D (2nd Col. Ionizer to Earth)	258 G (Lower 3 ESP Cell) / 260 G (Upper 3 ESP Cell)	273 G (Lower 3 ESP Cell) / 269 G (Upper 3 ESP Cell)
3	Sub-Assembly D (3rd Col. Ionizer to Earth)	260 G (Lower 3 ESP Cell) / 260 G (Upper 3 ESP Cell)	225 G (Lower 3 ESP Cell) / 265 G (Upper 3 ESP Cell)
4	Sub-Assembly D (1st to 3rd Col. Collector the Earth)	247 G (1st Col.) / 256 G (2nd Col.) / 266 G (3rd Col.)	240 G (1st Col.) / 260 G (2nd Col.) / 254 G (3rd Col.)

Step 2 - Maximum Voltage Withstand Test

Items	Test Voltage (kV DC)	Duration (min)	Measured Voltage (kV DC)	Test Result
1	20 (Ionizer)	1	20.2	P / F / NA
2	20 (Ionizer)		20.2	P / F / NA
3	20 (Ionizer)		20.2	P / F / NA
4	8 (Collector)	1	7.2	P / F / NA

B) List of Testing Equipment / Instruments

Type	Model	Serial No	Calibration Cert. No	Date of Cert.
HV insulation tester	AR3125	6819355	KSZS25021278D001	26/02/2025
DC Voltage Meter	HVP-40DM	20230668	ZD202508111226	11/08/2025

Remark: P / F / NA = Pass / Fail / Not Applicable
The passing criteria for the test is passing the insulation test after for maximum voltage withstand test.
The insulation resistance is over 1000MOhm (*) for HV DC Cable and 30MOhm for ESP Cell

Comment:

Test / Checked By : REW No.: W133567 Grade: ~~B/H~~ (Name of CTA Representative)	Name: Ho Tung	Signature: Ho Tung	Date: 14/8/25
Witnessed By : (Name of JEC Representative)	Name: John Chan	Signature:	Date: 14/8/25
Witnessed By : (Name of GCL)	Name: Boris Yan	Signature:	Date: 14/8/25
Witnessed By : (Name of AMMJV)	Name: Andy Tang	Signature:	Date: 14/8/25
Witnessed By : (Name of)	Name:	Signature:	Date:
Witnessed By : (Name of)	Name:	Signature:	Date:

Gammon

CTA INTERNATIONAL AS

Air Purification System – HV Power Supply Units Test & Commissioning Report

Contract No.:	HY/2019/13	RISC No.:	36860A
Project:	Central Kowloon Route - Buildings, Electrical and Mechanical	Date:	14/08/2025
Location:	~~VVB~~ / HVB / ~~RVB~~	Room Name:	
T&C Plan Ref. No:	J3883-TVS-S-I17	Page:	
Ref. Dwg. No.:	J3883-MEP-APS-HVB-1604 & 1605 & 1606		

Part 4 : Functional and Performance Tests for HV Power Supply Units (Sheet 1 of 5)

A) Maximum Voltage Withstand Test for ESP Cell (TCP Section 4.6.1)

From:	ESP HV Switch Room 01 / 02	To:	APS Plenum No.01 / 02 / 03 Sub-assembly A / ~~B / C / D / E~~

Step 1 & 3 - Insulation Resistance Test before and after the Maximum Voltage Withstand Test

Items	Circuit No. or Details of Equipment	Insulation Resistance (MΩ)	
		Before Max. Withstand Tests	After Max. Withstand Tests
1	Sub-Assembly A (1st Col. Ionizer to Earth)	202 G (Lower 3 ESP Cell) / 273 G (Upper 3 ESP Cell)	246 G (Lower 3 ESP Cell) / 258 G (Upper 3 ESP Cell)
2	Sub-Assembly B (2nd Col. Ionizer to Earth)	260 G (Lower 3 ESP Cell) / 277 G (Upper 3 ESP Cell)	278 G (Lower 3 ESP Cell) / 261 G (Upper 3 ESP Cell)
3	Sub-Assembly C (3rd Col. Ionizer to Earth)	244 G (Lower 3 ESP Cell) / 240 G (Upper 3 ESP Cell)	234 G (Lower 3 ESP Cell) / 260 G (Upper 3 ESP Cell)
4	Sub-Assembly D (1st to 3rd Col. Collector the Earth)	211 G (1st Col.) / 219 G (2nd Col.) / 228 G (3rd Col.)	232 G (1st Col.) / 259 G (2nd Col.) / 250 G (3rd Col.)

Step 2 - Maximum Voltage Withstand Test

Items	Test Voltage (kV DC)	Duration (min)	Measured Voltage (kV DC)	Test Result
1	20 (Ionizer)	1	20.2	P / F / NA
2	20 (Ionizer)		20.2	P / F / NA
3	20 (Ionizer)		20.2	P / F / NA
4	8 (Collector)	1	7.2	P / F / NA

B) List of Testing Equipment / Instruments

Type	Model	Serial No	Calibration Cert. No	Date of Cert.
HV insulation tester	AR3125	6819355	KSZS25021278D001	26/02/2025
DC Voltage Meter	HVP-40DM	20230668	ZD202508111226	11/08/2025

Remark: P / F / NA = Pass / Fail / Not Applicable
The passing criteria for the test is passing the insulation test after for maximum voltage withstand test.
The insulation resistance is over 1000MOhm (*) for HV DC Cable and 30MOhm for ESP Cell

Comment:

Test / Checked By : REW No.: W133567 Grade BH (Name of CTA Representative)	Name: Ho Tung	Signature: Ho Tung	Date: 14/8/25
Witnessed By : (Name of JEC Representative)	Name: John Chan	Signature:	Date: 14/8/25
Witnessed By : (Name of GCL)	Name: Boris Yan	Signature:	Date: 14/8/25
Witnessed By : (Name of AMMJV)	Name: Andy Tang	Signature: Andy Tang	Date: 14/8/25
Witnessed By : (Name of)	Name:	Signature:	Date:
Witnessed By : (Name of)	Name:	Signature:	Date:

Gammon

CTA INTERNATIONAL A/S

Air Purification System – HV Power Supply Units Test & Commissioning Report

Contract No.:	HY/2019/13	RISC No.:	36860A
Project:	Central Kowloon Route - Buildings, Electrical and Mechanical	Date:	14/08/2025
Location:	YVB / HVB / KVB	Room Name:	
T&C Plan Ref. No:	J3883-APS-SI-17	Page:	
Ref. Dwg. No.:	J3883/~~APS~~ MZP/APS/HVB/1604 & 1605 & 1606 (5)		

Part 4 : Functional and Performance Tests for HV Power Supply Units (Sheet 2A of 5)

C) ESP HV Power Supply Cabinets Information

Cabinets ID:	HVB-APS3-ESP-PSC-01	Main Switch Rating:	80A
Location:	ESP HV Switch Room 01 / 02	Fed From:	HVB-DB-ESP03-1

D) Output Voltage Measurement for HV Power Supply Units (TCP Section 4.6.2)

Item	Circuit No. or Details of Equipment	Vol-meter Reading at PSU (kV)	Am-meter Reading of PSU (mA)	Measured Voltage (kV) at ESP	Result (see remark)
1	HVB-APS3-PSU-01A Subassembly 14kV (I1)	14.0	71.2	14.0	P / F
2	HVB-APS3-PSU-02A Subassembly 14kV (I2)	14.0	73.4	14.0	P / F
3	HVB-APS3-PSU-03A Subassembly 14kV (I3)	14.0	77.9	14.0	P / F
4	HVB-APS3-PSU-04A Subassembly 6.5kV (C)	6.6	11.0	6.5	P / F
5	HVB-APS3-PSU-05B Subassembly 14kV (I1)	14.0	71.2	14.0	P / F
6	HVB-APS3-PSU-06B Subassembly 14kV (I2)	14.0	71.3	14.0	P / F
7	HVB-APS3-PSU-07B Subassembly 14kV (I3)	14.0	74.2	14.0	P / F
8	HVB-APS3-PSU-08B Subassembly 6.5kV (C)	6.6	10.5	6.5	P / F
9	HVB-APS3-PSU-09C Subassembly 14kV (I1)	14.0	71.2	14.0	P / F
10	HVB-APS3-PSU-10C Subassembly 14kV (I2)	14.0	77.2	14.0	P / F

E) List of Testing Equipment / Instruments

Type	Model	Serial No	Calibration Cert. No	Date of Cert.
DC Voltage meter	HVP-40DM	20230168	ZD2025081226	11/08/2025

Remark: P / F = Pass / Fail, measured output voltage for ionizer and for collector is ±14kV ±5% 6.5kV ±5%

Comment:

Test / Checked By : REW No.: W13567 Grade B+H (Name of CTA Representative)	Name: HO TUNG	Signature: Ho Tung	Date: 14/08/2025
Witnessed By : (Name of JEC Representative)	Name: John Chan	Signature:	Date: 14 AUG 2025
Witnessed By : (Name of GCL)	Name: Boris Yan	Signature:	Date: 14 AUG 2025
Witnessed By : (Name of AMMJV)	Name: Andy Tang	Signature:	Date: 14 AUG 2025
Witnessed By : (Name of)	Name:	Signature:	Date:
Witnessed By : (Name of)	Name:	Signature:	Date:

Gammon

CTA INTERNATIONAL AS

Air Purification System – HV Power Supply Units Test & Commissioning Report			
Contract No.:	HY/2019/13	RISC No.:	36860A
Project:	Central Kowloon Route - Buildings, Electrical and Mechanical	Date:	14/08/2025
Location:	YVB / HVB / KVB	Room Name:	
T&C Plan Ref. No:	J5883-APS-S-I-17	Page:	
Ref. Dwg. No.:	J5883/MEP/APS/HVB/1604 & 1605 & 1606		

Part 4 : Functional and Performance Tests for HV Power Supply Units (Sheet 2B of 5)

C) ESP HV Power Supply Cabinets Information

Cabinets ID:	HVB-APS3-ESP-PSC-02	Main Switch Rating:	80A
Location:	ESP HV Switch Room 01 02	Fed From:	HVB-DB-ESP03-2

D) Output Voltage Measurement for HV Power Supply Units (TCP Section 4.6.2)

Item	Circuit No. or Details of Equipment	Vol-meter Reading at PSU (kV)	Am-meter Reading of PSU (mA)	Measured Voltage (kV) at ESP	Result (see remark)
1	HVB-APS3-PSU-11 C Subassembly 14kV (I3)	14.0	71.1	14.0	P / F
2	HVB-APS3-PSU-12 C Subassembly 6.5kV (C)	6.5	10.5	6.5	P / F
3	HVB-APS3-PSU-13 D Subassembly 14kV (I1)	14.0	72.1	14.0	P / F
4	HVB-APS3-PSU-14 D Subassembly 14kV (I2)	14.0	68.2	14.0	P / F
5	HVB-APS3-PSU-15 D Subassembly 14kV (I3)	14.0	77.1	14.0	P / F
6	HVB-APS3-PSU-16 D Subassembly 6.5kV (C)	6.5	10.2	6.5	P / F
7	HVB-APS3-PSU-17 E Subassembly 14kV (I1)	14.0	71.2	14.0	P / F
8	HVB-APS3-PSU-18 E Subassembly 14kV (I2)	14.0	68.5	14.0	P / F
9	HVB-APS3-PSU-19 E Subassembly 14kV (I3)	14.0	67.7	14.0	P / F
10	HVB-APS3-PSU-20 E Subassembly 6.5kV (C)	6.5	10.3	6.5	P / F

E) List of Testing Equipment / Instruments

Type	Model	Serial No	Calibration Cert. No	Date of Cert.
DC Voltage meter	HVP-40DM	20230668	ZD20250811226	11/08/2025

Remark: P / F = Pass / Fail, measured output voltage for ionizer and for collector is±14kV ±5% 6.5kV ±5%

Comment:

Test / Checked By : REW No.: W133567 Grade B+H (Name of CTA Representative)	Name: HO TUNG	Signature: Ho Tung	Date: 14/08/2025
Witnessed By : (Name of JEC Representative)	Name: John Chan	Signature:	Date: 14 AUG 2025
Witnessed By : (Name of GCL)	Name: Boris Yan	Signature:	Date: 14 AUG 2025
Witnessed By : (Name of AMMOV)	Name: Andy Tang	Signature:	Date: 14 AUG 2025
Witnessed By : (Name of)	Name:	Signature:	Date:
Witnessed By : (Name of)	Name:	Signature:	Date:

Gammon

CTA INTERNATIONAL AS CLEAN TUNNEL AIR

Air Purification System – HV Power Supply Units Test & Commissioning Report			
Contract No.:	HY/2019/13	RISC No.:	368600A
Project:	Central Kowloon Route - Buildings, Electrical and Mechanical	Date:	14/08/2025
Location:	YVB / HVB / KVB	Room Name:	
T&C Plan Ref. No:	J3883-APS-S-I-17	Page:	
Ref. Dwg. No.:	J3883/MEP/APS/HVB/1606 & 1605 & 1606		

Part 4 : Functional and Performance Tests for HV Power Supply Units (Sheet 3A of 5)

F) HV Power Supply Unit Arc Test (TCP Section 4.6.3) Cabinets ID: H VB-APS 3 -ESP-PSC-0 1

Item	Circuit No. or Details of Equipment	Reading shown on arc number display	ARC Shutdown Light Up	PSU Lower Voltage to 0V	PSU ramps up to setting voltage within 4 sec	Counter Auto reset to 0
1	H VB-APS 3 -PSU-01 A Subassembly 14 kV (I1)	~~14~~ 20	P / F	P / F	P / F	P / F
2	H VB-APS 3 -PSU-02 A Subassembly 14 kV (I2)	~~14~~ 20	P / F	P / F	P / F	P / F
3	H VB-APS 3 -PSU-03 A Subassembly 14 kV (I3)	~~14~~ 20	P / F	P / F	P / F	P / F
4	H VB-APS 3 -PSU-04 A Subassembly 14 kV (C)	20	P / F	P / F	P / F	P / F
5	H VB-APS 3 -PSU-05 B Subassembly 14 kV (I1)	20	P / F	P / F	P / F	P / F
6	H VB-APS 3 -PSU-06 B Subassembly 14 kV (I2)	20	P / F	P / F	P / F	P / F
7	H VB-APS 3 -PSU-07 B Subassembly 14 kV (I3)	20	P / F	P / F	P / F	P / F
8	H VB-APS 3 -PSU-08 B Subassembly 14 kV (C)	20	P / F	P / F	P / F	P / F
9	H VB-APS 3 -PSU-01 C Subassembly 14 kV (I1)	20	P / F	P / F	P / F	P / F
10	H VB-APS 3 -PSU-10 C Subassembly 14 kV (I2)	20	P / F	P / F	P / F	P / F

Remarks: P / F / NA = Pass / Fail / Not Applicable
Setting of ESP PSU for the Arc Test:
1. The number of allowable arcs within 30 sec. Adjustable 0-99. Set to 20
2. Wait time after ARC shutdown, adjustable 50ms-400ms. Set to 400ms
3. Ramp-up time after ARC shutdown, adjustable 0,4s-4s. Set to 4 sec.

Comment:

Test / Checked By : REW No.: W13567 Grade B+H (Name of CTA Representative)	Name: HO TUNG	Signature: Ho Tung	Date: 14/08/2025
Witnessed By : (Name of JEC Representative)	Name: John Chan	Signature:	Date: 14 AUG 2025
Witnessed By : (Name of GCL)	Name: Boris Yan	Signature:	Date: 14 AUG 2025
Witnessed By : (Name of AMMJV)	Name: Andy Tang	Signature:	Date: 14 AUG 2025
Witnessed By : (Name of)	Name:	Signature:	Date:
Witnessed By : (Name of)	Name:	Signature:	Date:

Gammon

CTA INTERNATIONAL AS CLEAN TUNNEL AIR

Air Purification System – HV Power Supply Units Test & Commissioning Report			
Contract No.:	HY/2019/13	RISC No.:	36860A
Project:	Central Kowloon Route - Buildings, Electrical and Mechanical	Date:	14/08/2025
Location:	YVB / HVB / KVB	Room Name:	
T&C Plan Ref. No:	J5883-APS-S-I-17	Page:	
Ref. Dwg. No.:	J5883/MEP/APS/1-HVB/1604 & 1605 & 1606		

Part 4 : Functional and Performance Tests for HV Power Supply Units (Sheet 3B of 5)

F) HV Power Supply Unit Arc Test (TCP Section 4.6.3) Cabinets ID: H VB-APS 3 -ESP-PSC-0 7

Item	Circuit No. or Details of Equipment	Reading shown on arc number display	ARC Shutdown Light Up	PSU Lower Voltage to 0V	PSU ramps up to setting voltage within 4 sec	Counter Auto reset to 0
1	H VB-APS 3 -PSU-01 A Subassembly 14 kV (I1)	20	P / F	P / F	P / F	P / F
2	H VB-APS 3 -PSU-02 A Subassembly 14 kV (I2)	20	P / F	P / F	P / F	P / F
3	H VB-APS 3 -PSU-03 A Subassembly 14 kV (I3)	20	P / F	P / F	P / F	P / F
4	H VB-APS 3 -PSU-04 A Subassembly 6.5 kV (C)	20	P / F	P / F	P / F	P / F
5	H VB-APS 3 -PSU-05 B Subassembly 14 kV (I1)	20	P / F	P / F	P / F	P / F
6	H VB-APS 3 -PSU-06 B Subassembly 14 kV (I2)	20	P / F	P / F	P / F	P / F
7	H VB-APS 3 -PSU-07 B Subassembly 14 kV (I3)	20	P / F	P / F	P / F	P / F
8	H VB-APS 3 -PSU-08 B Subassembly 6.5 kV (C)	20	P / F	P / F	P / F	P / F
9	H VB-APS 3 -PSU-09 C Subassembly 14 kV (I1)	20	P / F	P / F	P / F	P / F
10	H VB-APS 3 -PSU-10 C Subassembly 14 kV (I2)	20	P / F	P / F	P / F	P / F

Remarks: P / F / NA = Pass / Fail / Not Applicable

Setting of ESP PSU for the Arc Test:

1. The number of allowable arcs within 30 sec. Adjustable 0-99. Set to 20
2. Wait time after ARC shutdown, adjustable 50ms-400ms. Set to 400ms
3. Ramp-up time after ARC shutdown, adjustable 0,4s-4s. Set to 4 sec.

Comment:

Test / Checked By : REW No.: W135567 Grade B+H (Name of CTA Representative)	Name: HO TUNG	Signature: Ho Tung	Date: 14/08/2025
Witnessed By : (Name of JEC Representative)	Name: John Chan	Signature:	Date: 14/08/2025
Witnessed By : (Name of GCL)	Name: Boris Yan	Signature:	Date: 14/08/2025
Witnessed By : (Name of AMMJV)	Name: Andy Tang	Signature: Andy Tang	Date: 14/08/2025
Witnessed By : (Name of)	Name:	Signature:	Date:
Witnessed By : (Name of)	Name:	Signature:	Date:

Gammon

CTA INTERNATIONAL AS CLEAN TUNNEL A/S

Air Purification System – HV Power Supply Units Test & Commissioning Report			
Contract No.:	HY/2019/13	RISC No.:	36860A
Project:	Central Kowloon Route - Buildings, Electrical and Mechanical	Date:	14/08/2025
Location:	YVB / HVB / KVB	Room Name:	
T&C Plan Ref. No:	J3885-APS-S-I-17	Page:	
Ref. Dwg. No.:	J3885-MEP/APS/HVB/1604 & 1605 & 1606		

Part 4 : Functional and Performance Tests for HV Power Supply Units (Sheet 4A of 5)

G) Functional Test for the Constant Current Control Mode Cabinets ID: HVB-APS3-ESP-PSC-02

(TCP Section 4.6.4)

Item	Equipment Description	Functional Test for Constant Current Control Mode				
		Before Earth Fault Simulation		During Earth Fault Simulation		Constant Output Current Observed on PSU *
		"CC" not light up	Output Current on PSU	"CC" light up	Output Current on PSU	
1	HVB-APS3-PSU-11 C Subassembly 14 kV (I3)	P / F	71.1 mA	P / F	0 mA	P / F
2	HVB-APS3-PSU-12 C Subassembly 6.5 kV (C)	P / F	16.2 mA	P / F	0 mA	P / F
3	HVB-APS3-PSU-13 D Subassembly 14 kV (I1)	P / F	79.2 mA	P / F	0 mA	P / F
4	HVB-APS3-PSU-14 D Subassembly 14 kV (I2)	P / F	68.4 mA	P / F	0 mA	P / F
5	HVB-APS3-PSU-15 D Subassembly 14 kV (I3)	P / F	75.2 mA	P / F	0 mA	P / F
6	HVB-APS3-PSU-16 D Subassembly 6.5 kV (C)	P / F	11.1 mA	P / F	0 mA	P / F
7	HVB-APS3-PSU-17 E Subassembly 14 kV (I1)	P / F	75.8 mA	P / F	0 mA	P / F
8	HVB-APS3-PSU-18 E Subassembly 14 kV (I2)	P / F	65.4 mA	P / F	0 mA	P / F
9	HVB-APS3-PSU-19 E Subassembly 14 kV (I3)	P / F	78.1 mA	P / F	0 mA	P / F
10	HVB-APS3-PSU-20 E Subassembly 6.5 kV (C)	P / F	12.1 mA	P / F	0 mA	P / F

Remarks: P / F = Pass / Fail,
* Acceptance Criteria for Output Current during the Earth Fault Simulation is ± 5% of before the Fault

Comment:

Test / Checked By : REW No.: WT3567 Grade B+H (Name of CTA Representative)	Name: HO TUNG	Signature: Ho Tung	Date: 14/08/2025
Witnessed By : (Name of JEC Representative)	Name: John Chan	Signature:	Date: 14 AUG 2025
Witnessed By : (Name of GCL)	Name: Boris Yan	Signature:	Date: 14 AUG 2025
Witnessed By : (Name of AMMJV)	Name: Andy Tang	Signature:	Date: 14 AUG 2025
Witnessed By : (Name of)	Name:	Signature:	Date:
Witnessed By : (Name of)	Name:	Signature:	Date:

Gammon

CTA INTERNATIONAL AS CLEAN TUNNEL AIR

Air Purification System – HV Power Supply Units Test & Commissioning Report			
Contract No.:	HY/2019/13	RISC No.:	36860A
Project:	Central Kowloon Route - Buildings, Electrical and Mechanical	Date:	14/08/2025
Location:	YVB / HVB / KVB	Room Name:	
T&C Plan Ref. No:	J3883-APS-L-01-17	Page:	
Ref. Dwg. No.:	J3883/MEP/APS/HVB/1604 & 1605 & 1606		

Part 4 : Functional and Performance Tests for HV Power Supply Units (Sheet 4B of 5)

G) Functional Test for the Constant Current Control Mode Cabinets ID: H VB-APS3 -ESP-PSC-01

(TCP Section 4.6.4)

Item	Equipment Description	Functional Test for Constant Current Control Mode				
		Before Earth Fault Simulation		During Earth Fault Simulation		Constant Output Current Observed on PSU *
		"CC" not light up	Output Current on PSU	"CC" light up	Output Current on PSU	
1	H VB-APS3 -PSU-01 A Subassembly 14 kV (I1)	P / F	71.2 mA	P / F	0 mA	P / F
2	H VB-APS3 -PSU-02 A Subassembly 14 kV (I2)	P / F	69.5 mA	P / F	0 mA	P / F
3	H VB-APS3 -PSU-03 A Subassembly 14 kV (I3)	P / F	68.1 mA	P / F	0 mA	P / F
4	H VB-APS3 -PSU-06 A Subassembly 14 kV (C)	P / F	70.2 mA	P / F	0 mA	P / F
5	H VB-APS3 -PSU-05 B Subassembly 14 kV (I1)	P / F	65.4 mA	P / F	0 mA	P / F
6	H VB-APS3 -PSU-06 B Subassembly 14 kV (I2)	P / F	69.9 mA	P / F	0 mA	P / F
7	H VB-APS3 -PSU-07 B Subassembly 14 kV (I3)	P / F	71.2 mA	P / F	0 mA	P / F
8	H VB-APS3 -PSU-08 B Subassembly 14 kV (C)	P / F	73.4 mA	P / F	0 mA	P / F
9	H VB-APS3 -PSU-09 C Subassembly 14 kV (I1)	P / F	69.4 mA	P / F	0 mA	P / F
10	H VB-APS3 -PSU-10 C Subassembly 14 kV (I2)	P / F	71.2 mA	P / F	0 mA	P / F

Remarks: P / F = Pass / Fail,
* Acceptance Criteria for Output Current during the Earth Fault Simulation is ± 5% of before the Fault

Comment:

Test / Checked By : REW No.: W133567 Grade B+H (Name of CTA Representative)	Name: HO TUNG	Signature: Ho Tung	Date: 14/08/2025
Witnessed By : (Name of JEC Representative)	Name: John Chan	Signature:	Date: 14 AUG 2025
Witnessed By : (Name of GCL)	Name: Boris Yan	Signature:	Date: 14 AUG 2025
Witnessed By : (Name of AMMOV)	Name: Andy Tang	Signature: Andy Tang	Date: 14 AUG 2025
Witnessed By : (Name of)	Name:	Signature:	Date:
Witnessed By : (Name of)	Name:	Signature:	Date:

Gammon

CTA INTERNATIONAL AS CLEAN TUNNEL AIR

Air Purification System – HV Power Supply Units Test & Commissioning Report			
Contract No.:	HY/2019/13	RISC No.:	36860A
Project:	Central Kowloon Route - Buildings, Electrical and Mechanical	Date:	14/08/2025
Location:	YVB / HVB / KVB	Room Name:	
T&C Plan Ref. No:	J3883A-APS-S-I-17	Page:	
Ref. Dwg. No.:	J3883/MEP/APS/HVB/1604 & 1605 & 1606		

Part 4 : Functional and Performance Tests for HV Power Supply Units (Sheet 5 of 5)

H) Functional Test for Build-in Door Limit and Door Limit Switches (TCP Section 4.6.8 & 4.6.9)

Items	Circuit No. or Details of Equipment	Build-in Door Limit Switch Front and Rear			Limit Switch Signal at Rear of Cabinet Door correctly to APS PLC	Result
		Cooling Unit switch off ~15s when opened cabinet door	Cooling Unit Switch On ~15s after closed cabinet door	Condenser Fan & Compressor switch on after ~3 mins closed cabinet door		
1	Build-in Door Limit Switch at Cabinet Front Door	N/A	N/A	N/A	N/A	P / F
2	Build-in Door Limit Switch at Cabinet Rear Door	N/A	N/A	N/A	N/A	P / F
3	Limit Switch at Rear of Cabinet Door	N/A	N/A	N/A	✓	P / F

Remark: P / F / NA = Pass / Fail / Not Applicable

Comment:

Test / Checked By : REW No.: W133567 Grade B+H (Name of CTA Representative)	Name: HO TUNG	Signature: Ho Tung	Date: 14/08/2025
Witnessed By : (Name of JEC Representative)	Name: John Chan	Signature:	Date: 14 AUG 2025
Witnessed By : (Name of GCL)	Name: Boris Yan	Signature:	Date: 14 AUG 2025
Witnessed By : (Name of AMMJV)	Name: Andy Tang	Signature:	Date: 14 AUG 2025
Witnessed By : (Name of)	Name:	Signature:	Date:
Witnessed By : (Name of)	Name:	Signature:	Date:

Appendix D3 – Site Acceptance Test (SAT) Reports for KVB ESP HV Power Supply Units

Gammon

CTA INTERNATIONAL AS

Air Purification System – HV Power Supply Units Test & Commissioning Report			
Contract No.:	HY/2019/13	RISC No.:	32056
Project:	Central Kowloon Route - Buildings, Electrical and Mechanical	Date:	27/03/2025
Location:	YVB / HVB / KVB	Room Name:	Plenum 1
T&C Plan Ref. No:	J3883-TVS-S-06283	Page:	
Ref. Dwg. No.:			

Part 1 : Installation Inspection of ESP HV Power Supply Cabinets (Sheet 1 of 3)			
A) ESP HV Power Supply Cabinets Information			
Cabinets ID:	KVB-APS 1 -ESP-PSC-01	Main Switch Rating:	~~63A~~ 80
Location:	ESP HV Switch Room 01 / 02	Supply Fed From:	KVB-DB-ESP01

B) Visual Inspection for ESP HV Power Supply Cabinets (TCP Section 4.3.1)		
Items	**Description of Inspection**	**Test Result**
a.	Verify cabinets are installed per the accepted ESP HV Switch Room layout and plant room details	(P) / F / NA
b.	Check clearance space (≥1400mm front, ≥600mm rear) per EMSD CoP	(P) / F / NA
c.	Ensure cabinets are securely fixed, sealed, and free of damage, corrosion, wear, or dust	(P) / F / NA
d.	Check that the cabinet door, door handle and lock are installed and operated properly	(P) / F / NA
C) Visual Inspection for Cabinet Top Cooling Units (TCP Section 4.3.2)		
a.	Check that the cabinet top cooling units are without visual damage, corrosion or sign of wear and tear	(P) / F / NA
b.	Check that the cabinet top cooling unit is securely fixed on top of the cabinets according to the accepted shop drawing and fabrication drawing	(P) / F / NA
c.	Check the exhaust lourve of the cabinet cooling unit to ensure no obstructions or blockages	(P) / F / NA
d.	Check the internal air duct is connected properly with the cabinet top cooling unit	(P) / F / NA
e.	Check the cable connection between cabinet and cooling unit are completed properly	(P) / F / NA
Remark:	P / F / NA = Pass / Fail / Not Applicable	
Comment:		

Test / Checked By : REW No.: W134523 Grade A (Name of CTA Representative)	Name: LAI LEONG TAI	Signature:	Date: 27/03/2025
Witnessed By : (Name of JEC Representative)	Name: TONY HO	Signature:	Date: 27/03/2025
Witnessed By : (Name of GCL)	Name: Raymond Lau	Signature:	Date: 27/03/2025
Witnessed By : (Name of AMMJV)	Name: Sam Lui	Signature:	Date: 27/03/2025
Witnessed By : (Name of EMSD)	Name: WONG Cheong Shing CIE/TSC/1	Signature:	Date: 27 MAR 2025
Witnessed By : (Name of)	Name:	Signature:	Date:

Gammon

CTA INTERNATIONAL AS

Air Purification System – HV Power Supply Units Test & Commissioning Report			
Contract No.:	HY/2019/13	RISC No.:	32056
Project:	Central Kowloon Route - Buildings, Electrical and Mechanical	Date:	27/03/2025
Location:	YVB / HVB / KVB	Room Name:	Plenum 1
T&C Plan Ref. No:	J3883-TVS-S-06283	Page:	
Ref. Dwg. No.:			

Part 1 : Installation Inspection of ESP HV Power Supply Cabinets (Sheet 2 of 3)		
Items	**Description of Inspection**	**Test Result**
D) Visual Inspection for ESP HV Power Supply Units (TCP Section 4.3.3)		
a.	No visible damage to impair safety	P / F / NA
b.	Check that the ESP HV power supply units are securely fixed inside the Power Supply Cabinet with no physical damage, or signs of deterioration	P / F / NA
c.	Check and record the equipment ID, manufacturer, model number, serial number and other information, showing on the name plate for cabinet top cooling unit and ESP HV power supply units, and record it the initial installed location on the test form	P / F / NA
E) Visual Inspection for Accessories inside the Cabinet (TCP Section 4.3.4)		
a.	Check that the limit switch is securely fixed on rear door of the cabinet with proper cabling works	P / F / NA
Remark:	P / F / NA = Pass / Fail / Not Applicable	
Comment:		

Test / Checked By : REW No.: W134523 Grade A (Name of CTA Representative)	Name: LAI LEONG TAI	Signature:	Date: 27/03/2025
Witnessed By : (Name of JEC Representative)	Name: Tony H	Signature:	Date: 27/03/2025
Witnessed By : (Name of GCL)	Name: Raymond Lau	Signature:	Date: 27/03/2025
Witnessed By : (Name of AMMSU)	Name: Sam Lui	Signature:	Date: 27/03/2025
Witnessed By : (Name of EMSD)	Name: WONG Cheong Shing CIE/TSC/1	Signature:	Date: 27 MAR 2025
Witnessed By : (Name of)	Name:	Signature:	Date:

Gammon

CTA INTERNATIONAL AS

Air Purification System – HV Power Supply Units Test & Commissioning Report			
Contract No.:	HY/2019/13	RISC No.:	32056.24
Project:	Central Kowloon Route - Buildings, Electrical and Mechanical	Date:	27/03/2025
Location:	YVB / HVB / KVB	Room Name:	Plenum 1
T&C Plan Ref. No:	53883-TVS-S-06283	Page:	
Ref. Dwg. No.:			

Part 1 : Installation Inspection of ESP HV Power Supply Cabinets (Sheet 1 of 3)			
A) ESP HV Power Supply Cabinets Information			
Cabinets ID:	KVB-APS 1 -ESP-PSC-0 2	Main Switch Rating:	~~63A~~ 80
Location:	ESP HV Switch Room 01/02	Supply Fed From:	KVB-DB-ESP01

B) Visual Inspection for ESP HV Power Supply Cabinets (TCP Section 4.3.1)		
Items	**Description of Inspection**	**Test Result**
a.	Verify cabinets are installed per the accepted ESP HV Switch Room layout and plant room details	(P) / F / NA
b.	Check clearance space (≥1400mm front, ≥600mm rear) per EMSD CoP	(P) / F / NA
c.	Ensure cabinets are securely fixed, sealed, and free of damage, corrosion, wear, or dust	(P) / F / NA
d.	Check that the cabinet door, door handle and lock are installed and operated properly	(P) / F / NA
C) Visual Inspection for Cabinet Top Cooling Units (TCP Section 4.3.2)		
a.	Check that the cabinet top cooling units are without visual damage, corrosion or sign of wear and tear	(P) / F / NA
b.	Check that the cabinet top cooling unit is securely fixed on top of the cabinets according to the accepted shop drawing and fabrication drawing	(P) / F / NA
c.	Check the exhaust lourve of the cabinet cooling unit to ensure no obstructions or blockages	(P) / F / NA
d.	Check the internal air duct is connected properly with the cabinet top cooling unit	(P) / F / NA
e.	Check the cable connection between cabinet and cooling unit are completed properly	(P) / F / NA
Remark:	P / F / NA = Pass / Fail / Not Applicable	
Comment:		

Test / Checked By : REW No.: N134523 Grade A (Name of CTA Representative)	Name: LAI LEONG TAN	Signature:	Date: 27/03/2025
Witnessed By : (Name of JEC Representative)	Name: Tung Ho	Signature:	Date: 27/03/2025
Witnessed By : (Name of GCL)	Name: Raymond Lau	Signature:	Date: 27/03/2025
Witnessed By : (Name of AMMSV)	Name: Sam Lui	Signature:	Date: 27/03/2025
Witnessed By : (Name of EMSD)	Name: WONG Cheong Shing CIE/TSC/1	Signature:	Date: 27 MAR 2025
Witnessed By : (Name of)	Name:	Signature:	Date:

Gammon

CIA INTERNATIONAL AS

Air Purification System – HV Power Supply Units Test & Commissioning Report			
Contract No.:	HY/2019/13	RISC No.:	32056
Project:	Central Kowloon Route - Buildings, Electrical and Mechanical	Date:	27/03/2025
Location:	YVB / HVB / KVB	Room Name:	Plenum 1
T&C Plan Ref. No:	J3333-TVS-S-06283	Page:	
Ref. Dwg. No.:			

Part 1 : Installation Inspection of ESP HV Power Supply Cabinets (Sheet 2 of 3)		
Items	**Description of Inspection**	**Test Result**
D) Visual Inspection for ESP HV Power Supply Units (TCP Section 4.3.3)		
a.	No visible damage to impair safety	P / F / NA
b.	Check that the ESP HV power supply units are securely fixed inside the Power Supply Cabinet with no physical damage, or signs of deterioration	P / F / NA
c.	Check and record the equipment ID, manufacturer, model number, serial number and other information, showing on the name plate for cabinet top cooling unit and ESP HV power supply units, and record it the initial installed location on the test form	P / F / NA
E) Visual Inspection for Accessories inside the Cabinet (TCP Section 4.3.4)		
a.	Check that the limit switch is securely fixed on rear door of the cabinet with proper cabling works	P / F / NA
Remark:	P / F / NA = Pass / Fail / Not Applicable	
Comment:		

Test / Checked By : REW No.: W134523 Grade A (Name of CTA Representative)	Name: LAI LEONG TAT	Signature:	Date: 27/03/2025
Witnessed By : (Name of JEC Representative)	Name: Tony Ho	Signature:	Date: 27/03/2025
Witnessed By : (Name of GCL)	Name: Raymond Lau	Signature:	Date: 27/03/2025
Witnessed By : (Name of AMMSV)	Name: Sam Lai	Signature:	Date: 27/03/2025
Witnessed By : (Name of ZMSD)	Name: WONG Cheong Shing CIE/TSC/1	Signature:	Date: 27 MAR 2025
Witnessed By : (Name of)	Name:	Signature:	Date:

Gammon

CIA INTERNATIONAL AS

Air Purification System – HV Power Supply Units Test & Commissioning Report			
Contract No.:	HY/2019/13	RISC No.:	32053
Project:	Central Kowloon Route - Buildings, Electrical and Mechanical	Date:	7/4/2025
Location:	YVB / HVB / KVB	Room Name:	Plenum 1
T&C Plan Ref. No:	J3883-TUS-S-06283	Page:	
Ref. Dwg. No.:			

Part 2: Installation Inspection and Cable Tests for HV DC Cables (Sheet 1 of 2)

A) Visual Inspection (TCP Section 4.4.1)

Items	Description of Inspection	Test Result
a)	No visible damage to impair safety	P / F / NA
b)	Ensure all cables, HV connectors, cable glands & accessories are in good condition	P / F / NA
c)	All conductors are correctly and securely connected and identified, protected against mechanical damage, and adequately supported	P / F / NA

B) HV DC Cable Continuity Tests (TCP Section 4.4.2)

From:	ESP HV Switch Room 01 / 02	To:	APS Plenum No.01 / 02 / 03 Sub-assembly A / B / C / D / E

Items	Circuit No. or Details of Equipment	Cable Length	Continuity Resistance (Ω)			Test Result
			Measured	Calculated	Passing Criteria	
1	K VB-APS 1 -HVC-1 Ionizer 1	24.0m	0.60	0.588	0.3	P / F / NA
2	K VB-APS 1 -HVC-2 Ionizer 2	24.3m		0.585	0.3	P / F / NA
3	K VB-APS 1 -HVC-3 Ionizer 3	23.7m	0.64	0.581	0.32	P / F / NA
4	K VB-APS 1 -HVC-4 Collector	26.0m		0.637	0.32	P / F / NA

C) List of Testing Equipment / Instruments

Type	Model	Serial No	Calibration Cert. No	Date of Cert.
Digital Micro Ohmmeter	UT620CT	C242921984	AC2202502220127	22/02/2025
Cable Fault tester	LCT268-2(KM)	250219005	AC2202502220090	22/02/2025

Remark: P / F / NA = Pass / Fail / Not Applicable
Insulation Resistance should be >1000MΩ, Continuity Resistance shall be < 0.0245Ω/m **(B)**

Comment:

Test / Checked By : REW No.: Grade (Name of CTA Representative)	Name: Ho Tung	Signature:	Date: 7/4/2025
Witnessed By : (Name of JEC Representative)	Name: Tony Ho	Signature:	Date: 7/4/2025
Witnessed By : (Name of GCL)	Name: Raymond Lau	Signature:	Date: 7/4/2025
Witnessed By : (Name of AMSU)	Name: Sam Lui	Signature:	Date: 7/4/2025
Witnessed By : (Name of ZMSD)	Name: WONG Cheong Shing CIE/TSC/1	Signature:	Date: - 7 APR 2025
Witnessed By : (Name of)	Name:	Signature:	Date:

Gammon

CTA INTERNATIONAL AS

Air Purification System – HV Power Supply Units Test & Commissioning Report

Contract No.:	HY/2019/13	RISC No.:	32053
Project:	Central Kowloon Route - Buildings, Electrical and Mechanical	Date:	7/4/2025
Location:	YVB / HVB / KVB	Room Name:	Plenum 1
T&C Plan Ref. No:		Page:	
Ref. Dwg. No.:			

Part 2: Installation Inspection and Cable Tests for HV DC Cables (Sheet 1 of 2)

A) Visual Inspection (TCP Section 4.4.1)

Items	Description of Inspection	Test Result
a)	No visible damage to impair safety	P / F / NA
b)	Ensure all cables, HV connectors, cable glands & accessories are in good condition	P / F / NA
c)	All conductors are correctly and securely connected and identified, protected against mechanical damage, and adequately supported	P / F / NA

B) HV DC Cable Continuity Tests (TCP Section 4.4.2)

From: ESP HV Switch Room 01 / 02 To: APS Plenum No. 01 / 02 / 03 Sub-assembly A / B / C / D / E

Items	Circuit No. or Details of Equipment	Cable Length	Continuity Resistance (Ω) Measured	Calculated	Passing Criteria	Test Result
1	KVB-APS01-HVC-5 Ionizer 1	26.3m	0.76	0.38	0.64	P / F / NA
2	KVB-APS01-HVC-6 Ionizer 2	26.9m		0.38	0.66	P / F / NA
3	KVB-APS01-HVC-3 Ionizer 3	27.0m	0.88	0.42	0.66	P / F / NA
4	KVB-APS01-HVC-8 Collector	29.0m		0.46	0.71	P / F / NA

C) List of Testing Equipment / Instruments

Type	Model	Serial No	Calibration Cert. No	Date of Cert.
Digital Micro Ohmmeter	UT620C+	C242921984	AC220250720127	22/02/2025
Cable fault tester	LCT268-2(km)	250219005	AC220250220090	22/02/2025

Remark: P / F / NA = Pass / Fail / Not Applicable
Insulation Resistance should be >1000MΩ, Continuity Resistance shall be < 0.0245Ω/m **(B)**

Comment:

Test / Checked By : REW No.: Grade (Name of CTA Representative)	Name: Ho Tay	Signature:	Date: 7/4/2025
Witnessed By : (Name of JEC Representative)	Name: Tony Ho	Signature:	Date: 7/4/2025
Witnessed By : (Name of GCL)	Name: Raymond Lau	Signature:	Date: 7/4/2025
Witnessed By : (Name of AMSV)	Name: Sam Lui	Signature:	Date: 7/4/2025
Witnessed By : (Name of ZMSD)	Name: WONG Cheong Shing CIE/TSC/1	Signature:	Date: - 7 APR 2025
Witnessed By : (Name of)	Name:	Signature:	Date:

Gammon

CIA INTERNATIONAL AS CLEAN TUNNEL AIR

Air Purification System – HV Power Supply Units Test & Commissioning Report			
Contract No.:	HY/2019/13	RISC No.:	32053
Project:	Central Kowloon Route - Buildings, Electrical and Mechanical	Date:	7/4/2025
Location:	YVB / HVB / KVB	Room Name:	Plenum 1
T&C Plan Ref. No:		Page:	
Ref. Dwg. No.:			

Part 2: Installation Inspection and Cable Tests for HV DC Cables (Sheet 1 of 2)

A) Visual Inspection (TCP Section 4.4.1)

Items	Description of Inspection	Test Result
a)	No visible damage to impair safety	P / F / NA
b)	Ensure all cables, HV connectors, cable glands & accessories are in good condition	P / F / NA
c)	All conductors are correctly and securely connected and identified, protected against mechanical damage, and adequately supported	P / F / NA

B) HV DC Cable Continuity Tests (TCP Section 4.4.2)

From:	ESP HV Switch Room 01 / 02	To:	APS Plenum No 01 / 02 / 03 Sub-assembly A / B / C / D / E

Items	Circuit No. or Details of Equipment	Cable Length	Continuity Resistance (Ω) Measured	Calculated	Passing Criteria	Test Result
1	KVB-APS 1 -HVC-9 Ionizer 1	28.7m	0.85	0.42	0.70	P / F / NA
2	KVB-APS 1 -HVC-10 Ionizer 2	29.3m		0.43	0.72	P / F / NA
3	KVB-APS 1 -HVC-11 Ionizer 3	29.0m	0.87	0.42	0.71	P / F / NA
4	KVB-APS 1 -HVC-12 Collector	30.4m		0.45	0.74	P / F / NA

C) List of Testing Equipment / Instruments

Type	Model	Serial No	Calibration Cert. No	Date of Cert.
Digital Micro Ohmmeter	UT620CT	C242921984	ACZ20250220127	22/02/2025
Cable fault tester	LCT268-2(km)	25029005	ACZ20250222090	22/02/2025

Remark: P / F / NA = Pass / Fail / Not Applicable
Insulation Resistance should be >1000MΩ, Continuity Resistance shall be < 0.0245Ω/m **(B)**

Comment:

Test / Checked By : REW No.: Grade (Name of CTA Representative)	Name: Ho Tung	Signature:	Date: 7/4/2025
Witnessed By : (Name of JEC Representative)	Name: Tony Ho	Signature:	Date: 7/4/2025
Witnessed By : (Name of GCL)	Name: Raymond Lau	Signature:	Date: 7/4/2025
Witnessed By : (Name of AMNSU)	Name: Lam Lui	Signature:	Date: 7/4/2025
Witnessed By : (Name of EMSD)	Name: WONG Cheong Shing CIE/TSC/1	Signature:	Date: -7 APR 2025
Witnessed By : (Name of)	Name:	Signature:	Date:

Gammon

CIA INTERNATIONAL AS CLEAN TUNNEL AIR

Air Purification System – HV Power Supply Units Test & Commissioning Report			
Contract No.:	HY/2019/13	RISC No.:	32057
Project:	Central Kowloon Route - Buildings, Electrical and Mechanical	Date:	7/4/2025
Location:	YVB / HVB / KVB	Room Name:	Plenum 1
T&C Plan Ref. No:		Page:	
Ref. Dwg. No.:			

Part 2: Installation Inspection and Cable Tests for HV DC Cables (Sheet 1 of 2)

A) Visual Inspection (TCP Section 4.4.1)

Items	Description of Inspection	Test Result
a)	No visible damage to impair safety	P / F / NA
b)	Ensure all cables, HV connectors, cable glands & accessories are in good condition	P / F / NA
c)	All conductors are correctly and securely connected and identified, protected against mechanical damage, and adequately supported	P / F / NA

B) HV DC Cable Continuity Tests (TCP Section 4.4.2)

From:	ESP HV Switch Room 01 / 02	To:	APS Plenum No. 01 / 02 / 03 Sub-assembly A / B / C / D / E

Items	Circuit No. or Details of Equipment	Cable Length	Continuity Resistance (Ω)			Test Result
			Measured	Calculated	Passing Criteria	
1	KVB-APS 1 -HVC- 13 Ionizer 1	30.4m	1.06	0.52	0.74	P / F / NA
2	KVB-APS 1 -HVC- 24 Ionizer 2	31.3m		0.54	0.77	P / F / NA
3	KVB-APS 1 -HVC- 35 Ionizer 3	32.2m	1.18	0.58	0.79	P / F / NA
4	KVB-APS 1 -HVC- 46 Collector	33.1m		0.60	0.81	P / F / NA

C) List of Testing Equipment / Instruments

Type	Model	Serial No	Calibration Cert. No	Date of Cert.
Digital Micro Ohmmeter	UT620 C+	C242921984	AC2202507220127	22/02/2025
Cable fault tester	LCT268-2(km)	250219005	AC2202502220090	22/02/2025

Remark: P / F / NA = Pass / Fail / Not Applicable
Insulation Resistance should be >1000MΩ, Continuity Resistance shall be < 0.0245Ω/m **(B)**

Comment:

Test / Checked By : REW No.: Grade (Name of CTA Representative)	Name: Ho Tung	Signature:	Date: 7/4/2025
Witnessed By : (Name of JEC Representative)	Name: Tony Ho	Signature:	Date: 7/4/2025
Witnessed By : (Name of GCL)	Name: Raymond Lau	Signature:	Date: 7/4/2025
Witnessed By : (Name of AMSU)	Name: Sam Lai	Signature:	Date: 7/4/2025
Witnessed By : (Name of ZMSD)	Name: WONG Cheong Shing CIE/TSC/1	Signature:	Date: - 7 APR 2025
Witnessed By : (Name of)	Name:	Signature:	Date:

Gammon

CIA INTERNATIONAL AS CLEAN TUNNEL AIR

Air Purification System – HV Power Supply Units Test & Commissioning Report			
Contract No.:	HY/2019/13	RISC No.:	320578
Project:	Central Kowloon Route - Buildings, Electrical and Mechanical	Date:	7/4/2025
Location:	YVB / HVB / KVB	Room Name:	Plenum 1
T&C Plan Ref. No:		Page:	
Ref. Dwg. No.:			

Part 2: Installation Inspection and Cable Tests for HV DC Cables (Sheet 1 of 2)

A) Visual Inspection (TCP Section 4.4.1)

Items	Description of Inspection	Test Result
a)	No visible damage to impair safety	P / F / NA
b)	Ensure all cables, HV connectors, cable glands & accessories are in good condition	P / F / NA
c)	All conductors are correctly and securely connected and identified, protected against mechanical damage, and adequately supported	P / F / NA

B) HV DC Cable Continuity Tests (TCP Section 4.4.2)

From: ESP HV Switch Room 01 / 02 To: APS Plenum No. 01 / 02 / 03 Sub-assembly A / B / C / D / E

Items	Circuit No. or Details of Equipment	Cable Length	Continuity Resistance (Ω) Measured	Calculated	Passing Criteria	Test Result
1	KVB-APS 1 -HVC-17 Ionizer 1	33.1m	1.21	0.61	0.81	P / F / NA
2	KVB-APS 1 -HVC-18 Ionizer 2	33.1m		0.61	0.81	P / F / NA
3	KVB-APS 1 -HVC-19 Ionizer 3	33.3m	1.25	0.62	0.82	P / F / NA
4	KVB-APS 1 -HVC-20 Collector	34.2m		0.63	0.84	P / F / NA

C) List of Testing Equipment / Instruments

Type	Model	Serial No	Calibration Cert. No	Date of Cert.
Digital Micro Ohmeter	UT620 Ct	C242921984	ACZ20250722012 7	22/02/2025
Cable fault tester	LCT268-2(km)	250219005	ACZ 20250220090	22/02/2025

Remark: P / F / NA = Pass / Fail / Not Applicable
Insulation Resistance should be >1000MΩ, Continuity Resistance shall be < 0.0245Ω/m **(B)**

Comment:

Test / Checked By : REW No.: Grade (Name of CTA Representative)	Name: Ho Tung	Signature:	Date: 7/4/2025
Witnessed By : (Name of JEC Representative)	Name: Tony Ho	Signature:	Date: 7/4/2025
Witnessed By : (Name of GCL)	Name: Raymond Lau	Signature:	Date: 7/4/2025
Witnessed By : (Name of AMMSU)	Name: Sam Lui	Signature:	Date: 7/4/2025
Witnessed By : (Name of EMSD)	Name: WONG Cheong Shing CIE/TSC/1	Signature:	Date: - 7 APR 2025
Witnessed By : (Name of)	Name:	Signature:	Date:

Gammon

CIA INTERNATIONAL AS CLEAN TUNNEL AIR

Air Purification System – HV Power Supply Units Test & Commissioning Report			
Contract No.:	HY/2019/13	RISC No.:	032057
Project:	Central Kowloon Route - Buildings, Electrical and Mechanical	Date:	3/4/2025
Location:	~~KVB~~ / ~~HVB~~ / KVB	Room Name:	plenum 1
T&C Plan Ref. No:		Page:	
Ref. Dwg. No.:			

Part 2: Installation Inspection and Cable Tests for HV DC Cables (2 of 2)

D) Maximum Voltage Withstand Test for HV DC Cable (TCP Section 4.4.3)

Step 1 & 3 - Insulation Resistance Test before and after the Maximum Voltage Withstand Test

From: ESP HV Switch Room 01 / 02 To: APS Plenum No 01 / 02 / 03 Sub-assembly A / B / C / D / E

Items	Circuit No. or Details of Equipment	Cable Length	Insulation Resistance (MΩ) before Step 2	Insulation Resistance (MΩ) after Step 2	Test Result
1	KVB-APS01-HVC-1 Ionizer 1	24.0m	>200GΩ	>200GΩ	P / F / NA
2	KVB-APS01-HVC-2 Ionizer 2	24.3m	>200GΩ	>200GΩ	P / F / NA
3	KVB-APS01-HVC-3 Ionizer 3	23.7m	469GΩ	346GΩ	P / F / NA
4	KVB-APS01-HVC-4 Collector	26.0m	198GΩ	204GΩ	P / F / NA

Step 2 - Maximum Voltage Withstand Test

Items	Circuit No. or Details of Equipment	Test Voltage (kV DC)	Duration (Min)	Measured Voltage
1	KVB-APS01-HVC-1 Ionizer 1	20	1	20.3 kV
2	KVB-APS01-HVC-2 Ionizer 2	20	1	20.3 kV
3	KVB-APS01-HVC-3 Ionizer 3	20	1	20.3 kV
4	KVB-APS01-HVC-4 Collector	20	1	20.3 kV

E) List of Testing Equipment / Instruments

Type	Model	Serial No	Calibration Cert. No	Date of Cert.
HV insulation tester	AR3125	6814355	KS252502127801002	26/02/2025
HV DC Voltage Meter	HVP-40DM	20240221	AC2202503030802	03/03/2025

Remark: P / F / NA = Pass / Fail / Not Applicable,
The passing criteria for the test is passing the insulation test after for maximum voltage withstand test.
The insulation resistance is over 1000MOhm (*) for HV DC Cable and 30MOhm for ESP Cell

Comment:

Test / Checked By : REW No.: Grade (Name of CTA Representative)	Name: Ho Tung	Signature:	Date: 07 APR 2025
Witnessed By : (Name of JEC Representative)	Name: Tony Ho	Signature:	Date: 07/04/2025
Witnessed By : (Name of GCL)	Name: Bernard Lau	Signature:	Date: 07/04/2025
Witnessed By : (Name of AMMJV)	Name: Sam Lui	Signature:	Date: 07/4/2025
Witnessed By : (Name of EMSD)	Name: WONG Cheong Shing CIE/TSC/1	Signature:	Date: - 7 APR 2025
Witnessed By : (Name of)	Name:	Signature:	Date:

Gammon

CIA INTERNATIONAL AS CLEAN TUNNEL AIR

Air Purification System – HV Power Supply Units Test & Commissioning Report			
Contract No.:	HY/2019/13	RISC No.:	32057
Project:	Central Kowloon Route - Buildings, Electrical and Mechanical	Date:	7/4/2025
Location:	~~YVB~~ / ~~HVB~~ / KVB	Room Name:	Plenum 1
T&C Plan Ref. No:		Page:	
Ref. Dwg. No.:			

Part 2: Installation Inspection and Cable Tests for HV DC Cables (2 of 2)

D) Maximum Voltage Withstand Test for HV DC Cable (TCP Section 4.4.3)

Step 1 & 3 - Insulation Resistance Test before and after the Maximum Voltage Withstand Test

From: ESP HV Switch Room 01 / 02 To: APS Plenum No. 01 / 02 / 03 Sub-assembly A / B / C / D / E

Items	Circuit No. or Details of Equipment	Cable Length	Insulation Resistance (MΩ) before Step 2	Insulation Resistance (MΩ) after Step 2	Test Result
1	KVB-APS01-HVC-5 Ionizer 1	26.3m	267GΩ	319GΩ	P / F / NA
2	KVB-APS01-HVC-6 Ionizer 2	26.9m	130GΩ	385GΩ	P / F / NA
3	KVB-APS01-HVC-7 Ionizer 3	27.0m	233GΩ	312GΩ	P / F / NA
4	KVB-APS01-HVC-8 Collector	29.0m	246GΩ	309GΩ	P / F / NA

Step 2 - Maximum Voltage Withstand Test

Items	Circuit No. or Details of Equipment	Test Voltage (kV DC)	Duration (Min)	Measured Voltage
1	KVB-APS01-HVC-5 Ionizer 1	20	1	20.3 kV
2	KVB-APS01-HVC-6 Ionizer 2	20	1	20.3 kV
3	KVB-APS01-HVC-7 Ionizer 3	20	1	20.3 kV
4	KVB-APS01-HVC-8 Collector	20	1	20.3 kV

E) List of Testing Equipment / Instruments

Type	Model	Serial No	Calibration Cert. No	Date of Cert.
HV insulation tester	AR3125	6819355	KS2525021278 0002	26/02/2025
HV DC Voltage Meter	HVP-40DM	20240221	AC220250303 0802	03/03/2025

Remark: P / F / NA = Pass / Fail / Not Applicable,
The passing criteria for the test is passing the insulation test after for maximum voltage withstand test.
The insulation resistance is over 1000MOhm (*) for HV DC Cable and 30MOhm for ESP Cell

Comment:

Test / Checked By : REW No.: Grade (Name of CTA Representative)	Name: Ho Tung	Signature:	Date: 07/04/2025
Witnessed By : (Name of JEC Representative)	Name: Tony Ho	Signature:	Date: 07/04/2025
Witnessed By : (Name of GCL)	Name: Kwong Lau	Signature:	Date: 07/04/2025
Witnessed By : (Name of AMMSV)	Name: Sam Lau	Signature:	Date: 07/4/2025
Witnessed By : (Name of EMSD)	Name: WONG Cheong Shing CIE/TSC/1	Signature:	Date: - 7 APR 2025
Witnessed By : (Name of)	Name:	Signature:	Date:

Gammon

CIA INTERNATIONAL AS

Air Purification System – HV Power Supply Units Test & Commissioning Report			
Contract No.:	HY/2019/13	RISC No.:	32057
Project:	Central Kowloon Route - Buildings, Electrical and Mechanical	Date:	7/4/2025
Location:	~~YVB~~ / ~~HVB~~ / KVB	Room Name:	Plenum 1
T&C Plan Ref. No:		Page:	
Ref. Dwg. No.:			

Part 2: Installation Inspection and Cable Tests for HV DC Cables (2 of 2)

D) Maximum Voltage Withstand Test for HV DC Cable (TCP Section 4.4.3)

Step 1 & 3 - Insulation Resistance Test before and after the Maximum Voltage Withstand Test

From: ESP HV Switch Room 01 / 02 To: APS Plenum No 01 / 02 / 03 Sub-assembly A / B / C / D / E

Items	Circuit No. or Details of Equipment	Cable Length	Insulation Resistance (MΩ) before Step 2	Insulation Resistance (MΩ) after Step 2	Test Result
1	KVB-APS01-HVC-9 Ionizer 1	28.7m	313 GΩ	344 GΩ	P / F / NA
2	KVB-APS01-HVC-10 Ionizer 2	29.3m	201 GΩ	322 GΩ	P / F / NA
3	KVB-APS01-HVC-11 Ionizer 3	29.0m	255 GΩ	333 GΩ	P / F / NA
4	KVB-APS01-HVC-12 Collector	30.4m	180 GΩ	292 GΩ	P / F / NA

Step 2 - Maximum Voltage Withstand Test

Items	Circuit No. or Details of Equipment	Test Voltage (kV DC)	Duration (Min)	Measured Voltage
1	KVB-APS01-HVC-9 Ionizer 1	20	1	20.3 kV
2	KVB-APS01-HVC-10 Ionizer 2	20	1	20.3 kV
3	KVB-APS01-HVC-11 Ionizer 3	20	1	20.3 kV
4	KVB-APS01-HVC-12 Collector	20	1	20.3 kV

E) List of Testing Equipment / Instruments

Type	Model	Serial No	Calibration Cert. No	Date of Cert.
HV insulation tester	AR3125	6819355	KS2525024278D002	26/02/2025
HV DC Voltage Meter	HVP-40DM	20240221	AC2202503030802	03/03/2025

Remark: P / F / NA = Pass / Fail / Not Applicable,
The passing criteria for the test is passing the insulation test after for maximum voltage withstand test.
The insulation resistance is over 1000MOhm (*) for HV DC Cable and 30MOhm for ESP Cell

Comment:

Test / Checked By : REW No.: Grade (Name of CTA Representative)	Name: Ho Tung	Signature:	Date: 07/04/2025
Witnessed By : (Name of JEC Representative)	Name: Tony Ho	Signature:	Date: 07/04/2025
Witnessed By : (Name of GCL)	Name: Rayand Lau	Signature:	Date: 07/04/2025
Witnessed By : (Name of AMJV)	Name: Sam Lui	Signature:	Date: 7/4/2025
Witnessed By : (Name of EMSD)	Name: WONG Cheong Shing CIE/TSC/1	Signature:	Date: - 7 APR 2025
Witnessed By : (Name of)	Name:	Signature:	Date:

Gammon

CIA INTERNATIONAL A/S

Air Purification System – HV Power Supply Units Test & Commissioning Report			
Contract No.:	HY/2019/13	RISC No.:	32057
Project:	Central Kowloon Route - Buildings, Electrical and Mechanical	Date:	7/4/2025
Location:	~~KVB / LHVB~~ / KVB	Room Name:	Plenum 1
T&C Plan Ref. No:		Page:	
Ref. Dwg. No.:			

Part 2: Installation Inspection and Cable Tests for HV DC Cables (2 of 2)

D) Maximum Voltage Withstand Test for HV DC Cable (TCP Section 4.4.3)

Step 1 & 3 - Insulation Resistance Test before and after the Maximum Voltage Withstand Test

From: ESP HV Switch Room 01 / 02 To: APS Plenum No. 01 / 02 / 03 Sub-assembly A / B / C / D / E

Items	Circuit No. or Details of Equipment	Cable Length	Insulation Resistance (MΩ) before Step 2	Insulation Resistance (MΩ) after Step 2	Test Result
1	KVB-APS 01-HVC-13 Ionizer 1	30.4m	190GΩ	322GΩ	P / F / NA
2	KVB-APS 01-HVC-14 Ionizer 2	31.3m	115GΩ	302GΩ	P / F / NA
3	KVB-APS 01-HVC-15 Ionizer 3	32.2m	177GΩ	349GΩ	P / F / NA
4	KVB-APS 01-HVC-16 Collector	33.1m	180GΩ	363GΩ	P / F / NA

Step 2 - Maximum Voltage Withstand Test

Items	Circuit No. or Details of Equipment	Test Voltage (kV DC)	Duration (Min)	Measured Voltage
1	KVB-APS 01-HVC-13 Ionizer 1	20	1	20.3 kV
2	KVB-APS 01-HVC-14 Ionizer 2	20	1	20.3 kV
3	KVB-APS 01-HVC-15 Ionizer 3	20	1	20.3 kV
4	KVB-APS 01-HVC-16 Collector	20	1	20.3 kV

E) List of Testing Equipment / Instruments

Type	Model	Serial No	Calibration Cert. No	Date of Cert.
HV insulation tester	AR3125	6819355	KS25250212780002	26/02/2025
HV DC Voltage Meter	HVP-40DM	20240221	AC22025030308O2	03/03/2025

Remark: P / F / NA = Pass / Fail / Not Applicable,
The passing criteria for the test is passing the insulation test after for maximum voltage withstand test.
The insulation resistance is over 1000MOhm (*) for HV DC Cable and 30MOhm for ESP Cell

Comment:

Test / Checked By : REW No.: Grade (Name of CTA Representative)	Name: Ho Tung	Signature:	Date: 07/04/2025
Witnessed By : (Name of JEC Representative)	Name: Tony Ho	Signature:	Date: 07/04/2025
Witnessed By : (Name of GCL)	Name: Raymond Lau	Signature:	Date: 07/04/2025
Witnessed By : (Name of AMASV)	Name: Sam Lai	Signature:	Date: 07/4/2025
Witnessed By : (Name of ZMSD)	Name: WONG Cheong Shing CIE/TSC/1	Signature:	Date: - 7 APR 2025
Witnessed By : (Name of)	Name:	Signature:	Date:

Gammon

CIA INTERNATIONAL AS

Air Purification System – HV Power Supply Units Test & Commissioning Report			
Contract No.:	HY/2019/13	RISC No.:	032057
Project:	Central Kowloon Route - Buildings, Electrical and Mechanical	Date:	3/4/2025
Location:	~~XVB~~ / ~~HVB~~ / KVB	Room Name:	plenum 1
T&C Plan Ref. No:		Page:	
Ref. Dwg. No.:			

Part 2: Installation Inspection and Cable Tests for HV DC Cables (2 of 2)

D) Maximum Voltage Withstand Test for HV DC Cable (TCP Section 4.4.3)

Step 1 & 3 - Insulation Resistance Test before and after the Maximum Voltage Withstand Test

From: ESP HV Switch Room 01 / 02 To: APS Plenum No 01 / 02 / 03 Sub-assembly A / B / C / D / E

Items	Circuit No. or Details of Equipment	Cable Length	Insulation Resistance (MΩ) before Step 2	Insulation Resistance (MΩ) after Step 2	Test Result
1	KVB-APS01-HVC-17 Ionizer 1	33.1m	83.8GΩ	339GΩ	P / F / NA
2	KVB-APS01-HVC-18 Ionizer 2	33.1m	164GΩ	316GΩ	P / F / NA
3	KVB-APS01-HVC-19 Ionizer 3	33.3m	181GΩ	272GΩ	P / F / NA
4	KVB-APS01-HVC-20 Collector	34.2m	209GΩ	343GΩ	P / F / NA

Step 2 - Maximum Voltage Withstand Test

Items	Circuit No. or Details of Equipment	Test Voltage (kV DC)	Duration (Min)	Measured Voltage
1	KVB-APS01-HVC-17 Ionizer 1	20	1	20.3 kV
2	KVB-APS01-HVC-18 Ionizer 2	20	1	20.3 kV
3	KVB-APS01-HVC-19 Ionizer 3	20	1	20.3 kV
4	KVB-APS01-HVC-20 Collector	20	1	20.3 kV

E) List of Testing Equipment / Instruments

Type	Model	Serial No	Calibration Cert. No	Date of Cert.
HV insulation tester	AR3125	6819355	KS2525021278D002	26/02/2025
HV DC Voltage Meter	HVP-40DM	20240221	AC2202503030802	03/03/2025

Remark: P / F / NA = Pass / Fail / Not Applicable,
The passing criteria for the test is passing the insulation test after for maximum voltage withstand test.
The insulation resistance is over 1000MOhm (*) for HV DC Cable and 30MOhm for ESP Cell

Comment:

	Name:	Signature:	Date:
Test / Checked By : REW No.: Grade (Name of CTA Representative)	Lo Tung		07/04/2025
Witnessed By : (Name of JEC Representative)	Tony Ho		07/04/2025
Witnessed By : (Name of GCL)	Raymond Law		07/04/2025
Witnessed By : (Name of AMMSV)	Sam Lui		07/4/2025
Witnessed By : (Name of ZMSD)	WONG Cheong Shing CIE/TSC/I		- 7 APR 2025
Witnessed By : (Name of)			

Gammon

CIA INTERNATIONAL AS CLEAN TUNNEL AIR

Air Purification System – HV Power Supply Units Test & Commissioning Report			
Contract No.:	HY/2019/13	RISC No.:	32058
Project:	Central Kowloon Route - Buildings, Electrical and Mechanical	Date:	27/03/2025
Location:	~~YVB / HVB~~ / KVB	Room Name:	HV Room 2
T&C Plan Ref. No:	J3883-TVS-S-06283	Page:	
Ref. Dwg. No.:			

Part 3: Inspection and Test for Electrical Installation of ESP Filter (TCP Section 4.5)

Statutory Inspection and Test for LV and HV DC Installation (Sheet 1 of 10)

Items	Description of Inspection	Test Result
A) Visual Inspection (ASD TCP-EE, COP Code 21A/C and COP Appendix 13) - Working Space and Facilities (L.V.)		
a.	Adequacy working space and safe access provided for switch room / electrical facilities.	P / F / NA
b.	Entrance / exit to switch room and/or electrical facilities are free of obstruction.	P / F / NA
c.	Suitable locking facilities provided for switch room and /or electrical facilities.	P / F / NA
d.	Suitable lighting provision provided for switch room and /or electrical facilities.	P / F / NA
e.	Suitable ventilation provision provided for switch room and /or electrical facilities.	P / F / NA
f.	A warning notice 'DANGER — ELECTRICITY, UNAUTHORISED ENTRY PROHIBITED' and '危 險 —— 有電，未經授權不得內進' provided at every entrance of switch room.	P / F / NA
g.	Danger notices, warning notices, schematic diagrams, instructions and similar information are correctly and adequately provided.	P / F / NA
h.	Warning notices for Switch Rooms provided in compliance with EMSD CoP Code 17.	P / F / NA
i.	Warning notices for earthing and main bonding connections provided in compliance with EMSD CoP Code 17.	P / F / NA
j.	All switchgears, distribution boards and electrical equipment properly labelled in compliance with EMSD CoP Code 4D(1).	P / F / NA
k.	Continuity of protective conductors especially the bonding of all exposed conductive parts are satisfactory.	P / F / NA
l.	Logbook provided and work done properly recorded.	P / F / NA
Remark:	P / F / NA = Pass / Fail / Not Applicable	
Comment:		

Test / Checked By : REW No.: Grade (Name of CTA Representative)	Name: Ho Tung	Signature:	Date: 27/03/2025
Witnessed By : (Name of JEC Representative)	Name: Chung	Signature:	Date: 27/03/2025
Witnessed By : (Name of GCL)	Name: Raymond Lau	Signature:	Date: 21/03/2025
Witnessed By : (Name of AMMJV)	Name: Eric Tong	Signature:	Date: 27/03/25
Witnessed By : (Name of)	Name:	Signature:	Date:
Witnessed By : (Name of)	Name:	Signature:	Date:

Gammon

CIA INTERNATIONAL AS CLEAN TUNNEL AIR

Air Purification System – HV Power Supply Units Test & Commissioning Report			
Contract No.:	HY/2019/13	RISC No.:	32058
Project:	Central Kowloon Route - Buildings, Electrical and Mechanical	Date:	27/03/2025
Location:	~~YVB / HVB~~ / KVB	Room Name:	HV Room 2
T&C Plan Ref. No:	J3883-TVS-S-06283	Page:	
Ref. Dwg. No.:			

Part 3: Inspection and Test for Electrical Installation of ESP Filter (TCP Section 4.5)

Statutory Inspection and Test for LV and HV DC Installation (Sheet 2 of 10)

Items	Description of Inspection	Test Result
B)	**Visual Inspection (ASD TCP-EE, COP Code 21A & C and COP Appendix 13) - Distribution Board (L.V.)**	
a.	No visible damage to impair safety	P / F / NA
b.	No fuse installed in the neutral circuit.	P / F / NA
c.	All live parts screened with an insulating plate or earthed metal	P / F / NA
d.	All exposed metal parts effectively earthed.	P / F / NA
e.	A warning notice 'DANGER' and '危險' provided on the front panel of every distribution board.	P / F / NA
f.	A notice of periodic testing provided at or near the main distribution board incorporating a residual current device.	P / F / NA
g.	Safe access & adequate clearance space provided in compliance with EMSD CoP Code 4E.	P / F / NA
h.	Distribution boards securely mounted on suitable supports.	P / F / NA
i.	A suitable switch provided to control each distribution board.	P / F / NA
j.	Phase Identification for distribution board provided.	P / F / NA
k.	Check the breaking capacity of MCB / RCBO (6kA) in compliance with EMSD CoP Code 9.	P / F / NA
l.	Circuits connected to MCB / RCBO in accordance with the schematic diagram.	P / F / NA

Remark: P / F / NA = Pass / Fail / Not Applicable

Comment:

Test / Checked By : REW No.: Grade (Name of CTA Representative)	Name: Ho Tung	Signature: Ho Tung	Date: 27/03/2025
Witnessed By : (Name of JEC Representative)	Name: CHUNG Ip	Signature:	Date: 27/03/2025
Witnessed By : (Name of GCL)	Name: Raymond Lau	Signature:	Date: 21/03/2025
Witnessed By : (Name of AMMJV)	Name: Eric Tang	Signature:	Date: 27/03/25
Witnessed By : (Name of)	Name:	Signature:	Date:
Witnessed By : (Name of)	Name:	Signature:	Date:

Gammon

CIA INTERNATIONAL AS CLEAN TUNNEL AIR

Air Purification System – HV Power Supply Units Test & Commissioning Report			
Contract No.:	HY/2019/13	RISC No.:	32058
Project:	Central Kowloon Route - Buildings, Electrical and Mechanical	Date:	27/03/2025
Location:	~~YVB / HVB /~~ KVB	Room Name:	HV Room 2
T&C Plan Ref. No:	J3883-TVS-S-06283	Page:	
Ref. Dwg. No.:			

Part 3: Inspection and Test for Electrical Installation of ESP Filter (TCP Section 4.5)

Statutory Inspection and Test for LV and HV DC Installation (Sheet 3 of 10)

Items	Description of Inspection	Test Result
C)	**Visual Inspection (ASD TCP-EE, COP Code 21A & C and COP Appendix 13) - Conductors, Cables and Wirings (L.V.)**	
a.	No visible damage to impair safety.	P / F / NA
b.	All live conductors and their methods of insulation, in relation to design currents of circuits and to the operating currents of the protective devices, are properly selected and erected.	P / F / NA
c.	All cables, flexible cords, switches, plugs and socket outlets, accessories and equipment are found to be in good working conditions.	P / F / NA
d.	All conductors are correctly and securely connected and identified.	P / F / NA
e.	Armoured cables properly terminated by proper cable glands.	P / F / NA
f.	Non-sheathed cables protected by conduit, trunking, ducting or approved mechanical protective means.	P / F / NA
g.	Cables and cable containments, such as tray, ladder, ducting, trunking, conduit, etc., adequately supported.	P / F / NA
h.	Suitable cable lugs used for terminating cables, including termination at distribution board.	P / F / NA
i.	Main cables connected up with correct polarity.	P / F / NA
j.	Cables protected against mechanical damage and suitably supported.	P / F / NA
k.	All exposed metal parts including the armour effectively earthed.	P / F / NA

Remark: P / F / NA = Pass / Fail / Not Applicable

Comment:

Test / Checked By : REW No.: Grade (Name of CTA Representative)	Name: Ho Tung	Signature: Ho Tung	Date: 27/03/2025
Witnessed By : (Name of JEC Representative)	Name: CHUNG	Signature:	Date: 27/03/2025
Witnessed By : (Name of GCL)	Name: Raymond Lau	Signature:	Date: 21/03/2025
Witnessed By : (Name of AMNOY)	Name: Eric Tang	Signature:	Date: 27/03/25
Witnessed By : (Name of)	Name:	Signature:	Date:
Witnessed By : (Name of)	Name:	Signature:	Date:

Gammon

CTA INTERNATIONAL AS CLEAN TUNNEL AIR

Air Purification System – HV Power Supply Units Test & Commissioning Report			
Contract No.:	HY/2019/13	RISC No.:	32058
Project:	Central Kowloon Route - Buildings, Electrical and Mechanical	Date:	27/03/2025
Location:	~~YVB / HVB~~ / KVB	Room Name:	HV Room 2
T&C Plan Ref. No:	J3883-TVS-S-06283	Page:	
Ref. Dwg. No.:			

Part 3: Inspection and Test for Electrical Installation of ESP Filter (TCP Section 4.5)

Statutory Inspection and Test for LV and HV DC Installation (Sheet 4 of 10)

Items	Description of Inspection	Test Result
D)	**Visual Inspection (ASD TCP-EE, COP Code 21A and COP Appendix 13) - Final Circuits (L.V.)**	
a.	No visible damage to impair safety	P / F / NA
b.	All non-armoured cables susceptible to damage protected with steel conduit / trunking Bushing and rubber gromment, where necessary, provided.	P / F / NA
c.	Conductor sized to suit the rating of the fuse/ MCB protecting the circuit.	P / F / NA
d.	No cable joint in final circuit.	P / F / NA
e.	All joints of metal conduits or trunking to be mechanically sound, electrically continuous and protected against corrosion.	P / F / NA
f.	All metal conduits, trunking, switch boxes and exposed metal parts effectively earth.	P / F / NA
g.	Earth fault loop impedance and polarities of every outlet checked.	P / F / NA
h.	All fuses and single/double pole switches connected to the phase conductors only with correct polarity.	P / F / NA
i.	Low voltage circuits segregated from extra low voltage circuits.	P / F / NA
j.	Exposed insulated non-sheathed cables with mechanically protected.	P / F / NA
k.	No 2-pin sockets installed. All socket outlets connected with protective conductors and live conductors terminated at correct terminals.	P / F / NA

Remark: P / F / NA = Pass / Fail / Not Applicable

Comment:

Test / Checked By : REW No.: Grade (Name of CTA Representative)	Name: Ho Tung	Signature: Ho Tung	Date: 27/03/2025
Witnessed By : (Name of JEC Representative)	Name: CHUNG Tip	Signature:	Date: 27/03/2025
Witnessed By : (Name of GCL)	Name: Raymond Lau	Signature:	Date: 21/03/2025
Witnessed By : (Name of AMMJV)	Name: Eric Tang	Signature:	Date: 27/03/25
Witnessed By : (Name of)	Name:	Signature:	Date:
Witnessed By : (Name of)	Name:	Signature:	Date:

Gammon

CTA INTERNATIONAL AS CLEAN TUNNEL AIR

Air Purification System – HV Power Supply Units Test & Commissioning Report			
Contract No.:	HY/2019/13	RISC No.:	32058
Project:	Central Kowloon Route - Buildings, Electrical and Mechanical	Date:	27/03/2025
Location:	~~YVB / HVB~~ / KVB	Room Name:	HV Room 2
T&C Plan Ref. No:	J3883-TVS-S-06283	Page:	
Ref. Dwg. No.:			

Part 3: Inspection and Test for Electrical Installation of ESP Filter (TCP Section 4.5)

Statutory Inspection and Test for LV and HV DC Installation (Sheet 5 of 10)

Items	Description of Inspection	Test Result
E) Visual Inspection (ASD TCP-EE, COP Code 21A and COP Appendix 13) - Final Circuits (L.V.)		
l.	Final circuits using 13A socket outlets in compliance with EMSD Code 6E.	(P) / F / NA
m.	Where circuit protective conductor is formed by the metallic cable containment enclosure, a separate protective conductor between the earthing terminal of socket outlet and its associated metal box being provided.	(P) / F / NA
n.	Where circuit protective conductor is not formed by the metallic cable containment enclosure, a separate protective conductor to the earthing terminal of socket outlet being provided.	(P) / F / NA
o.	Residual current device having a rated residual operating current not exceeding 30mA provided for all socket outlets.	(P) / F / NA
p.	Minimum sizes of protective conductors are provided as per requirement in EMSD COP Code 11 for limitation of protective conductor impedance.	(P) / F / NA
q.	Means of isolation provided for every fixed appliance.	(P) / F / NA

Remark: P / F / NA = Pass / Fail / Not Applicable

Comment:

Test / Checked By : REW No.: Grade (Name of CTA Representative)	Name: Ho Tung	Signature: Ho Tung	Date: 27/03/2025
Witnessed By : (Name of JEC Representative)	Name: CHUNG	Signature:	Date: 27/03/2025
Witnessed By : (Name of GCL)	Name: Raymond Lau	Signature:	Date: 21/03/2025
Witnessed By : (Name of AMNJV)	Name: Eric Tang	Signature:	Date: 27/03/25
Witnessed By : (Name of)	Name:	Signature:	Date:
Witnessed By : (Name of)	Name:	Signature:	Date:

Gammon

CTA INTERNATIONAL AS

Air Purification System – HV Power Supply Units Test & Commissioning Report			
Contract No.:	HY/2019/13	RISC No.:	32058
Project:	Central Kowloon Route - Buildings, Electrical and Mechanical	Date:	27/03/2025
Location:	~~VVB / HVB~~ / KVB	Room Name:	HV Room 2
T&C Plan Ref. No:	J3883-TVS-S-06283	Page:	
Ref. Dwg. No.:			

Part 3: Inspection and Test for Electrical Installation of ESP Filter (TCP Section 4.5)

Statutory Inspection and Test for LV and HV DC Installation (Sheet 6 of 10)

Items	Description of Inspection	Test Result
F)	**Visual Inspection (ASD TCP-EE, COP Code 21A&C and COP Appendix 13) - Earthing and Bonding (L.V.)**	
a.	No visible damage to impair safety.	P / F / NA
b.	All exposed conductive parts of the wiring installation connected to the earthing terminal with appropriate protective conductor.	P / F / NA
c.	Minimum size of protective conductor used in compliance with EMSD CoP Table 11(1).	P / F / NA
d.	Protective conductor up to and including 6mm2 with green and yellow insulation sheath used throughout its length.	P / F / NA
e.	Copper links provided at joints of metallic trunking, forms part of a protective conductor	P / F / NA
f.	A warning notice 'SAFETY ELECTRICAL CONNECTION—DO NOT REMOVE and '安全接地 終端——切勿移去' provided at all main earthing and bonding connections.	P / F / NA
g.	Supplementary equipotential bonding effectively provided between exposed conductive parts and extraneous conductive parts.	P / F / NA
h.	Exposed conductive parts of fixed equipment installed outside equipotential zone effectively earthed for 0.4 sec. disconnection.	P / F / NA
i.	Exposed conductive parts of fixed equipment installed within equipotential zone effectively earthed for 5 sec. disconnection.	P / F / NA
j.	Effectiveness of the main equipotential bonding connection to the main earthing terminal.	P / F / NA
k.	Earthing conductors of adequate size.	P / F / NA
Remark:	P / F / NA = Pass / Fail / Not Applicable	
Comment:		

Test / Checked By : REW No.: Grade (Name of CTA Representative)	Name: Ho Tung	Signature: Ho Tung	Date: 27/03/2025
Witnessed By : (Name of JEC Representative)	Name: CHUNG zp	Signature:	Date: 27/03/2025
Witnessed By : (Name of GCL)	Name: Raymond Lau	Signature:	Date: 21/03/2025
Witnessed By : (Name of AMMJV)	Name: Eric Tang	Signature:	Date: 27/03/25
Witnessed By : (Name of)	Name:	Signature:	Date:
Witnessed By : (Name of)	Name:	Signature:	Date:

Gammon

CTA INTERNATIONAL AS

Air Purification System – HV Power Supply Units Test & Commissioning Report			
Contract No.:	HY/2019/13	RISC No.:	32058
Project:	Central Kowloon Route - Buildings, Electrical and Mechanical	Date:	27/03/2025
Location:	~~YVB / HVB~~ / KVB	Room Name:	HV Room 2
T&C Plan Ref. No:	J3883-TVS-S-06283	Page:	
Ref. Dwg. No.:			

Part 3: Inspection and Test for Electrical Installation of ESP Filter (TCP Section 4.5)

Statutory Inspection and Test for LV and HV DC Installation (Sheet 7 of 10)

Items	Description of Inspection	Test Result
G) Conductor Continuity (ASD TCP-EE, COP Code 21B(3) and (4))		
a.	All protective conductors used for equipotential bonding have been tested for continuity.	(P) / F / NA
b.	All final ring circuit conductors including the protective conductors have been tested for continuity.	(P) / F / NA
c.	Conductor continuity test results recorded in **relevant Test Form.**	(P) / F / NA

Remark: P / F / NA = Pass / Fail / Not Applicable

Comment:

Test / Checked By : REW No.: Grade (Name of CTA Representative)	Name: Ho Tung	Signature: Ho Tung	Date: 27/03/2025
Witnessed By : (Name of JEC Representative)	Name: Chung Kp	Signature:	Date: 27/03/2025
Witnessed By : (Name of GCL)	Name: Raymond Lau	Signature:	Date: 21/03/2025
Witnessed By : (Name of AMMJV)	Name: Eric Tang	Signature:	Date: 27/03/25
Witnessed By : (Name of)	Name:	Signature:	Date:
Witnessed By : (Name of)	Name:	Signature:	Date:

Gammon

CIA INTERNATIONAL AS CLEAN TUNNEL AIR

Air Purification System – HV Power Supply Units Test & Commissioning Report			
Contract No.:	HY/2019/13	RISC No.:	32058
Project:	Central Kowloon Route - Buildings, Electrical and Mechanical	Date:	27/03/2025
Location:	~~YVB / HVB /~~ KVB	Room Name:	HV Room 2
T&C Plan Ref. No:	J3883-TVS-S-06283	Page:	
Ref. Dwg. No.:			

Part 3: Inspection and Test for Electrical Installation of ESP Filter (TCP Section 4.5)

Statutory Inspection and Test for LV and HV DC Installation (Sheet 8 of 10)

Items	Description of Inspection	Test Result
H)	**Insulation Resistance (ASD TCP-EE, COP Code 21B(5))**	
a.	The insulation resistance to earth is NOT less than 1 mega ohm.	P / F / NA
b.	The insulation resistance between phase/poles is NOT less than 1 mega ohm.	P / F / NA
c.	The insulation resistance of equipment between the exposed conductive parts and all live parts is NOT less than 1 mega ohm when tested individually and separately (EMSD COP Code 21B(5)(f)).	P / F / NA
d.	Insulation resistance test results recorded in **relevant Test Form.**	P / F / NA

Remark: P / F / NA = Pass / Fail / Not Applicable

Comment:

Test / Checked By : REW No.: Grade (Name of CTA Representative)	Name: Ho Tung	Signature:	Date: 27/03/2025
Witnessed By : (Name of JEC Representative)	Name: CHUNG	Signature:	Date: 27/03/2025
Witnessed By : (Name of GCL)	Name: Raymond Lau	Signature:	Date: 21/03/2025
Witnessed By : (Name of AMMJV)	Name: Eric Tang	Signature:	Date: 21/03/25
Witnessed By : (Name of)	Name:	Signature:	Date:
Witnessed By : (Name of)	Name:	Signature:	Date:

Gammon

CIA INTERNATIONAL AS CLEAN TUNNEL AIR

Air Purification System – HV Power Supply Units Test & Commissioning Report			
Contract No.:	HY/2019/13	RISC No.:	32058
Project:	Central Kowloon Route - Buildings, Electrical and Mechanical	Date:	27/03/2025
Location:	~~YVB / HVB~~ / KVB	Room Name:	HV Room 2
T&C Plan Ref. No:	J3883-TVS-S-06283	Page:	
Ref. Dwg. No.:			

Part 3: Inspection and Test for Electrical Installation of ESP Filter (TCP Section 4.5)

Statutory Inspection and Test for LV and HV DC Installation (Sheet 9 of 10)

Items	Description of Inspection	Test Result
I) Polarity (ASD TCP-EE, COP Code 21B(6))		
a.	All fuses and single-poles devices are connected in the phase conductors only.	P / F / NA
b.	All wiring has been correctly connected to socket outlets and, etc.	P / F / NA
c.	Polarity Check results recorded in **relevant Test Form.**	P / F / NA

Remark: P / F / NA = Pass / Fail / Not Applicable

Comment:

Test / Checked By : REW No.: Grade (Name of CTA Representative)	Name: Ho Tung	Signature:	Date: 21/03/2025
Witnessed By : (Name of JEC Representative)	Name: CHUNG	Signature:	Date: 21/03/2025
Witnessed By : (Name of GCL)	Name: Raymond Lau	Signature:	Date: 21/03/2025
Witnessed By : (Name of AMNJV)	Name: Erik Tang	Signature:	Date: 27/03/25
Witnessed By : (Name of)	Name:	Signature:	Date:
Witnessed By : (Name of)	Name:	Signature:	Date:

Gammon

CTA INTERNATIONAL AS CLEAN TUNNEL AIR

Air Purification System – HV Power Supply Units Test & Commissioning Report			
Contract No.:	HY/2019/13	RISC No.:	32058
Project:	Central Kowloon Route - Buildings, Electrical and Mechanical	Date:	27/03/2025
Location:	~~YVB / HVB~~ / KVB	Room Name:	HV Room 2
T&C Plan Ref. No:	J3883-TVS-S-06283	Page:	
Ref. Dwg. No.:			

Part 3: Inspection and Test for Electrical Installation of ESP Filter (TCP Section 4.5)

Statutory Inspection and Test for LV and HV DC Installation (Sheet 10 of 10)

Items	Description of Inspection	Test Result
J) Functional Testing of All Devices Including Protective Devices (ASD TCP-EE, COP Code 21B(9))		
a.	Simulation tests on the operation of devices for earth fault protection are satisfactory.	P / F / NA
b.	50% of the rated tripping current shall not cause the residual current circuit breaker to open.	P / F / NA
c.	100% of the rated tripping current shall cause the residual current circuit breaker to open within 300ms or at any delay time declared by the manufacture of the devices.	P / F / NA
d.	Where the residual current circuit breaker has a rated tripping current not exceeding 30mA and has been installed to reduce the risk associated with direct contact, a residual current of 150mA should cause the circuit breaker to open within 40ms.	P / F / NA
e.	In no event should the test current be applied for a period exceeding one second	P / F / NA
f.	Breakers, moulded case circuit breakers, air circuit breakers, fused switches, switch-fuses and protective relays, etc. are satisfactory.	P / F / NA
g.	Hand operation on all items of equipment such as isolators, switch and protective relays, etc. are satisfactory.	P / F / NA
h.	Hand operation on all items of equipment such as isolators, switches and indicative devices are satisfactory.	P / F / NA
i.	Functional test of all devices including protective devices had been recorded in **relevant Test Form.**	P / F / NA
Remark: P / F / NA = Pass / Fail / Not Applicable		
Comment:		

Test / Checked By : REW No.: Grade (Name of CTA Representative)	Name: Ho Tung	Signature: Ho Tung	Date: 27/03/2025
Witnessed By : (Name of JEC Representative)	Name: CHUNG	Signature:	Date: 27/03/2025
Witnessed By : (Name of GCL)	Name: Raymond Lau	Signature:	Date: 21/03/2025
Witnessed By : (Name of AMMJV)	Name: Eric Tang	Signature:	Date: 27/03/25
Witnessed By : (Name of)	Name:	Signature:	Date:
Witnessed By : (Name of)	Name:	Signature:	Date:

Gammon

CTA INTERNATIONAL AS

Air Purification System – HV Power Supply Units Test & Commissioning Report			
Contract No.:	HY/2019/13	RISC No.:	31782
Project:	Central Kowloon Route - Buildings, Electrical and Mechanical	Date:	7/4/2025
Location:	~~YVB / HVB /~~ KVB	Room Name:	HV RM 2
T&C Plan Ref. No:	J3883-TVS-S-06283	Page:	
Ref. Dwg. No.:	J3883-TVS-D-02432		

Part 3: Inspection and Test for Electrical Installations (Sheet 2A of 5)

B) Earth Loop Impedance Test (TCP Section 4.5.3)

ESP HV Power Supply Cabinets Information

Cabinets ID:	KVB-APS01-ESP-PSC-01	Main Switch Rating:	80
Location:	ESP HV Switch Room 01 / 02	Supply Fed From:	KVB-DB-ESP01

Circuit No	Details of Equipment	Type of Protective Device	Rating	Earth Loop Impedance (Zs) (Ω)	Test Result
1	KVB-APS01-PSU-01 A Subassembly I1	RCBO	16A SP	0.1Ω	P / F / NA
2	KVB-APS01-PSU-02 A Subassembly I2	RCBO	16A SP	0.1Ω	P / F / NA
3	KVB-APS01-PSU-03 A Subassembly I3	RCBO	16A SP	0.11Ω	P / F / NA
4	KVB-APS01-PSU-04 A Subassembly C	RCBO	16A SP	0.11Ω	P / F / NA
5	KVB-APS01-PSU-05 B Subassembly I1	RCBO	16A SP	0.12Ω	P / F / NA
6	KVB-APS01-PSU-06 B Subassembly I2	RCBO	16A SP	0.12Ω	P / F / NA
7	KVB-APS01-PSU-07 B Subassembly I3	RCBO	16A SP	0.15Ω	P / F / NA
8	KVB-APS01-PSU-08 B Subassembly C	RCBO	16A SP	0.14Ω	P / F / NA
9	KVB-APS01-PSU-09 C Subassembly I1	RCBO	16A SP	0.17Ω	P / F / NA
10	KVB-APS01-PSU-10 C Subassembly I2	RCBO	16A SP	0.17Ω	P / F / NA

Remark: P / F / NA = Pass / Fail / Not Applicable
The Passing Criteria for the Max Earth Fault Loop Independence shall refer to EMSD COP.

Comment:

Test / Checked By : REW No.: Grade (Name of CTA Representative)	Name: Ho Tung	Signature:	Date: 7/4/2025
Witnessed By : (Name of JEC Representative)	Name: Lucy Li	Signature:	Date: 7/4/2025
Witnessed By : (Name of GCL)	Name: Brand Lau	Signature:	Date: 7/4/2025
Witnessed By : (Name of AMJV)	Name: Sam Lai	Signature:	Date: 7/4/2025
Witnessed By : (Name of EMSD)	Name: WONG Cheong Shing CIE/TSC/1	Signature:	Date: - 7 APR 2025
Witnessed By : (Name of)	Name:	Signature:	Date:

Gammon

CTA INTERNATIONAL AS

Air Purification System – HV Power Supply Units Test & Commissioning Report			
Contract No.:	HY/2019/13	RISC No.:	31782/ml
Project:	Central Kowloon Route - Buildings, Electrical and Mechanical	Date:	7/4/2025
Location:	~~YVB / HVB~~ / KVB	Room Name:	HV RM 2
T&C Plan Ref. No:	J3883-TVS-S-06283	Page:	
Ref. Dwg. No.:	J3883-TVS-D-02432		

Part 3: Inspection and Test for Electrical Installations (Sheet 2B of 5)

B) Earth Loop Impedance Test (TCP Section 4.5.3)

ESP HV Power Supply Cabinets Information

Cabinets ID:	KVB-APS01-ESP-PSC-02	Main Switch Rating:	80
Location:	ESP HV Switch Room 01 / 02	Supply Fed From:	KVB-DB-ESP01

Circuit No	Details of Equipment	Type of Protective Device	Rating	Earth Loop Impedance (Zs) (Ω)	Test Result
1	KVB-APS01-PSU-11 C Subassembly I3	RCBO	16A SP	0.10Ω	P / F / NA
2	KVB-APS01-PSU-12 C Subassembly C	RCBO	16A SP	0.11Ω	P / F / NA
3	KVB-APS01-PSU-13 D Subassembly I1	RCBO	16A SP	0.11Ω	P / F / NA
4	KVB-APS01-PSU-14 D Subassembly I2	RCBO	16A SP	0.12Ω	P / F / NA
5	KVB-APS01-PSU-15 D Subassembly I3	RCBO	16A SP	0.12Ω	P / F / NA
6	KVB-APS01-PSU-16 D Subassembly C	RCBO	16A SP	0.13Ω	P / F / NA
7	KVB-APS01-PSU-17 E Subassembly I1	RCBO	16A SP	0.13Ω	P / F / NA
8	KVB-APS01-PSU-18 E Subassembly I2	RCBO	16A SP	0.14Ω	P / F / NA
9	KVB-APS01-PSU-19 E Subassembly I3	RCBO	16A SP	0.15Ω	P / F / NA
10	KVB-APS01-PSU-20 E Subassembly C	RCBO	16A SP	0.18Ω	P / F / NA

Remark: P / F / NA = Pass / Fail / Not Applicable
The Passing Criteria for the Max Earth Fault Loop Independence shall refer to EMSD COP.

Comment:

Test / Checked By : REW No.: Grade (Name of CTA Representative)	Name: Ho Tung	Signature:	Date: 7/4/2025
Witnessed By : (Name of JEC Representative)	Name: Lucy Li	Signature:	Date: 7/4/2025
Witnessed By : (Name of GCL)	Name: Raymond Lau	Signature:	Date: 7/4/2025
Witnessed By : (Name of AMMSU)	Name: Sam Lai	Signature:	Date: 7/4/2025
Witnessed By : (Name of EMSD)	Name: WONG Cheong Shing CIE/TSC/1	Signature:	Date: - 7 APR 2025
Witnessed By : (Name of)	Name:	Signature:	Date:

Gammon

CTA INTERNATIONAL AS CLEAN TUNNEL AIR

Air Purification System – HV Power Supply Units Test & Commissioning Report			
Contract No.:	HY/2019/13	RISC No.:	31792
Project:	Central Kowloon Route - Buildings, Electrical and Mechanical	Date:	7/4/2025
Location:	~~YVB / HVB~~ / KVB	Room Name:	HV RM 2
T&C Plan Ref. No:	J3883-TVS-S-06283	Page:	
Ref. Dwg. No.:	J3883-TVS-D-02432		

Part 3: Inspection and Test for Electrical Installations (Sheet 3 of 5)

C) Functional Test of Residual Current Device (RCD) (TCP Section 4.5.3)

ESP HV Power Supply Cabinets Information

Cabinets ID:	KVB-APS01-ESP-PSC-01	Main Switch Rating:	80A
Location:	ESP HV Switch Room 01 / 02	Supply Fed From:	KVB-DB-ESP01

Circuit No. or Details of Equipment	Type of Protective Device	Rating	Polarity	RCD 50% (ms)	RCD 100% (ms)	Test Result
1	RCBO	16A SP	P / F / NA	P / F / NA	27.2	P / F / NA
2	RCBO	16A SP	P / F / NA	P / F / NA	26.5	P / F / NA
3	RCBO	16A SP	P / F / NA	P / F / NA	35.6	P / F / NA
4	RCBO	16A SP	P / F / NA	P / F / NA	37.1	P / F / NA
5	RCBO	16A SP	P / F / NA	P / F / NA	37.0	P / F / NA
6	RCBO	16A SP	P / F / NA	P / F / NA	26.9	P / F / NA
7	RCBO	16A SP	P / F / NA	P / F / NA	26.9	P / F / NA
8	RCBO	16A SP	P / F / NA	P / F / NA	26.8	P / F / NA
9	RCBO	16A SP	P / F / NA	P / F / NA	27.2	P / F / NA
10	RCBO	16A SP	P / F / NA	P / F / NA	36.7	P / F / NA

Remark: P / F / NA = Pass / Fail / Not Applicable
Tripping time of RCD for 30mA leakage current shall be within 300ms.

Comment:

Test / Checked By : REW No.: Grade (Name of CTA Representative)	Name: Ho Tung	Signature:	Date: 7/8/2028
Witnessed By : (Name of JEC Representative)	Name: Lucy Li	Signature:	Date: 7/4/2025
Witnessed By : (Name of GCL)	Name: Raymond Lau	Signature:	Date: 7/4/2025
Witnessed By : (Name of AMYSU)	Name: Sam Lui	Signature:	Date: 7/4/2025
Witnessed By : (Name of ZHSD)	Name: WONG Cheong Shing CIE/TSC/1	Signature:	Date: -7 APR 2025
Witnessed By : (Name of)	Name:	Signature:	Date:

Gammon

CTA INTERNATIONAL AS CLEAN TUNNEL AIR

Air Purification System – HV Power Supply Units Test & Commissioning Report			
Contract No.:	HY/2019/13	RISC No.:	31782
Project:	Central Kowloon Route - Buildings, Electrical and Mechanical	Date:	7/4/2025
Location:	~~YVB / HVB~~ / KVB	Room Name:	HV RM 2
T&C Plan Ref. No:	J3883-TVS-S-06283	Page:	
Ref. Dwg. No.:	J3883-TVS-D-02432		

Part 3: Inspection and Test for Electrical Installations (Sheet 3 of 5)

C) Functional Test of Residual Current Device (RCD) (TCP Section 4.5.3)

ESP HV Power Supply Cabinets Information

Cabinets ID:	K VB-APS01-ESP-PSC-02	Main Switch Rating:	80A
Location:	ESP HV Switch Room 01 / 02	Supply Fed From:	KVB-DB-ESP01

Circuit No. or Details of Equipment	Type of Protective Device	Rating	Polarity	RCD 50% (ms)	RCD 100% (ms)	Test Result
1	RCBO	16A SP	P / F / NA	P / F / NA	26.4	P / F / NA
2	RCBO	16A SP	P / F / NA	P / F / NA	26.7	P / F / NA
3	RCBO	16A SP	P / F / NA	P / F / NA	36.9	P / F / NA
4	RCBO	16A SP	P / F / NA	P / F / NA	27.4	P / F / NA
5	RCBO	16A SP	P / F / NA	P / F / NA	27.8	P / F / NA
6	RCBO	16A SP	P / F / NA	P / F / NA	27.6	P / F / NA
7	RCBO	16A SP	P / F / NA	P / F / NA	37.2	P / F / NA
8	RCBO	16A SP	P / F / NA	P / F / NA	37.2	P / F / NA
9	RCBO	16A SP	P / F / NA	P / F / NA	27.0	P / F / NA
10	RCBO	16A SP	P / F / NA	P / F / NA	27.2	P / F / NA

Remark: P / F / NA = Pass / Fail / Not Applicable
Tripping time of RCD for 30mA leakage current shall be within 300ms.

Comment:

Test / Checked By : REW No.: Grade (Name of CTA Representative)	Name: Ho Tung	Signature:	Date: 7/4/2025
Witnessed By : (Name of JEC Representative)	Name: Lucy Li	Signature:	Date: 7/4/2025
Witnessed By : (Name of GCL)	Name: Raymond Lau	Signature:	Date: 7/4/2025
Witnessed By : (Name of AMMJV)	Name: Sam Lui	Signature:	Date: 7/4/2025
Witnessed By : (Name of ZMSD)	Name: WONG Cheong Shing CIE/TSC/1	Signature:	Date: - 7 APR 2025
Witnessed By : (Name of)	Name:	Signature:	Date:

Gammon

CTA INTERNATIONAL AS

Air Purification System – HV Power Supply Units Test & Commissioning Report			
Contract No.:	HY/2019/13	RISC No.:	31782/ml
Project:	Central Kowloon Route - Buildings, Electrical and Mechanical	Date:	7/4/2025
Location:	~~YVB / HVB~~ / KVB	Room Name:	HV RM 2
T&C Plan Ref. No:	J3883-TVS-S-06283	Page:	
Ref. Dwg. No.:	J3883-TVS-D-02432		

Part 3: Inspection and Test for Electrical Installations (Sheet 4 of 5)

D) Functional Test and Circuitry Check (TCP Section 4.5.3)

ESP HV Power Supply Cabinets Information

Cabinets ID:	KVB-APS01-ESP-PSC-01	Main Switch Rating:	80A
Location:	ESP HV Switch Room 01 / 02	Supply Fed From:	KVB-DB-ESP01

Circuit No. or Details of Equipment	Type of Protective Device	Rating	Isolator	MCB	RCD Test Button	Circuitry Check
1	RCBO	16A SP	P / F / NA	P / F / NA	P / F / NA	P / F / NA
2	RCBO	16A SP	P / F / NA	P / F / NA	P / F / NA	P / F / NA
3	RCBO	16A SP	P / F / NA	P / F / NA	P / F / NA	P / F / NA
4	RCBO	16A SP	P / F / NA	P / F / NA	P / F / NA	P / F / NA
5	RCBO	16A SP	P / F / NA	P / F / NA	P / F / NA	P / F / NA
6	RCBO	16A SP	P / F / NA	P / F / NA	P / F / NA	P / F / NA
7	RCBO	16A SP	P / F / NA	P / F / NA	P / F / NA	P / F / NA
8	RCBO	16A SP	P / F / NA	P / F / NA	P / F / NA	P / F / NA
9	RCBO	16A SP	P / F / NA	P / F / NA	P / F / NA	P / F / NA
10	RCBO	16A SP	P / F / NA	P / F / NA	P / F / NA	P / F / NA
11	RCBO	16A SP	P / F / NA	P / F / NA	P / F / NA	P / F / NA

Remark: P / F / NA = Pass / Fail / Not Applicable

Comment:

Test / Checked By : REW No.: Grade (Name of CTA Representative)	Name: Ho Tung	Signature:	Date: 7/4/2025
Witnessed By : (Name of JEC Representative)	Name: Lung Li	Signature:	Date: 7/4/2025
Witnessed By : (Name of GCL)	Name: Ryan Lau	Signature:	Date: 7/4/2025
Witnessed By : (Name of AMSU)	Name: Sam Lai	Signature:	Date: 7/4/2025
Witnessed By : (Name of ZMSD)	Name: WONG Cheong Shing CIE/TSC/1	Signature:	Date: - 7 APR 2025
Witnessed By : (Name of)	Name:	Signature:	Date:

Gammon

CTA INTERNATIONAL AS

Air Purification System – HV Power Supply Units Test & Commissioning Report			
Contract No.:	HY/2019/13	RISC No.:	31782
Project:	Central Kowloon Route - Buildings, Electrical and Mechanical	Date:	7/4/2025
Location:	~~YVB / HVB~~ / KVB	Room Name:	HV RM 2
T&C Plan Ref. No:	J3883-TVS-S-06283	Page:	
Ref. Dwg. No.:	J3883-TVS-D-02432		

Part 3: Inspection and Test for Electrical Installations (Sheet 4 of 5)

D) Functional Test and Circuitry Check (TCP Section 4.5.3)

ESP HV Power Supply Cabinets Information

Cabinets ID:	KVB-APS01-ESP-PSC-02	Main Switch Rating:	80A
Location:	ESP HV Switch Room 01 / 02	Supply Fed From:	KVB-DB-ESP01

Circuit No. or Details of Equipment	Type of Protective Device	Rating	Isolator	MCB	RCD Test Button	Circuitry Check
1	RCBO	16A SP	P / F / NA	P / F / NA	P / F / NA	P / F / NA
2	RCBO	16A SP	P / F / NA	P / F / NA	P / F / NA	P / F / NA
3	RCBO	16A SP	P / F / NA	P / F / NA	P / F / NA	P / F / NA
4	RCBO	16A SP	P / F / NA	P / F / NA	P / F / NA	P / F / NA
5	RCBO	16A SP	P / F / NA	P / F / NA	P / F / NA	P / F / NA
6	RCBO	16A SP	P / F / NA	P / F / NA	P / F / NA	P / F / NA
7	RCBO	16A SP	P / F / NA	P / F / NA	P / F / NA	P / F / NA
8	RCBO	16A SP	P / F / NA	P / F / NA	P / F / NA	P / F / NA
9	RCBO	16A SP	P / F / NA	P / F / NA	P / F / NA	P / F / NA
10	RCBO	16A SP	P / F / NA	P / F / NA	P / F / NA	P / F / NA
11	RCBO	16A SP	P / F / NA	P / F / NA	P / F / NA	P / F / NA

Remark: P / F / NA = Pass / Fail / Not Applicable

Comment:

Test / Checked By : REW No.: Grade (Name of CTA Representative)	Name: Ho Tung	Signature:	Date: 7/4/2025
Witnessed By : (Name of JEC Representative)	Name: Lucy Li	Signature:	Date: 7/4/2025
Witnessed By : (Name of GCL)	Name: Raymond Lau	Signature:	Date: 7/4/2025
Witnessed By : (Name of AMMSU)	Name: Sam Lai	Signature:	Date: 7/4/2025
Witnessed By : (Name of ENSD)	Name: WONG Cheong Shing CIE/TSC/1	Signature:	Date: - 7 APR 2025
Witnessed By : (Name of)	Name:	Signature:	Date:

Gammon

CTA INTERNATIONAL A/S

Air Purification System – HV Power Supply Units Test & Commissioning Report			
Contract No.:	HY/2019/13	RISC No.:	33641
Project:	Central Kowloon Route - Buildings, Electrical and Mechanical	Date:	23/4/2025
Location:	YVB / HVB / KVB	Room Name:	Plenum 1
T&C Plan Ref. No:	J3883-TVS-S-06287	Page:	
Ref. Dwg. No.:			

Part 4 : Functional and Performance Tests for HV Power Supply Units (Sheet 1 of 5)

A) Maximum Voltage Withstand Test for ESP Cell (TCP Section 4.6.1)

From:	ESP HV Switch Room 01 / 02	To:	APS Plenum No.01 / 02 / 03 Sub-assembly A / B / C / D / E

Step 1 & 3 - Insulation Resistance Test before and after the Maximum Voltage Withstand Test

Items	Circuit No. or Details of Equipment	Insulation Resistance (MΩ)	
		Before Max. Withstand Tests	After Max. Withstand Tests
1	(1st Col. Ionizer to Earth)	346 (Lower 3 ESP Cell) / 223 (Upper 3 ESP Cell)	204 (Lower 3 ESP Cell) / 149 (Upper 3 ESP Cell)
2	(2nd Col. Ionizer to Earth)	148 (Lower 3 ESP Cell) / 194 (Upper 3 ESP Cell)	138 (Lower 3 ESP Cell) / 183 (Upper 3 ESP Cell)
3	(3rd Col. Ionizer to Earth)	250 (Lower 3 ESP Cell) / 340 (Upper 3 ESP Cell)	230 (Lower 3 ESP Cell) / 404 (Upper 3 ESP Cell)
4	(1st to 3rd Col. Collector the Earth)	63.1 (1st Col.) / 32.6 (2nd Col.) / 102 (3rd Col.)	74.3 (1st Col.) / 35.8 (2nd Col.) / 122 (3rd Col.)

Step 2 - Maximum Voltage Withstand Test

Items	Test Voltage (kV DC)	Duration (min)	Measured Voltage (kV DC)	Test Result
1	20 (Ionizer)	1	20/19.6	P / F / NA
2	20 (Ionizer)		19.8/19.6	P / F / NA
3	20 (Ionizer)		20/19.6	P / F / NA
4	8 (Collector)	1	7.5	P / F / NA

B) List of Testing Equipment / Instruments

Type	Model	Serial No	Calibration Cert. No	Date of Cert.
HV insulation test	AR3125	6819355	KS252502127800 1	25/02/2025
HV DC Voltage Meter	HVP-40DM	20240221	AC220250220090	03/03/2025

Remark: P / F / NA = Pass / Fail / Not Applicable
The passing criteria for the test is passing the insulation test after for maximum voltage withstand test.
The insulation resistance is over 1000MOhm (*) for HV DC Cable and 30MOhm for ESP Cell

Comment:

Test / Checked By : REW No.: Grade (Name of CTA Representative)	Name: Ho Tung	Signature:	Date: 23/4/2025
Witnessed By : (Name of JEC Representative)	Name: John Chan	Signature:	Date: 23/4/2025
Witnessed By : (Name of GCL)	Name: Raymond Lau	Signature:	Date: 23/4/2025
Witnessed By : (Name of AMSC)	Name: Sam Lu	Signature:	Date: 23/4/2025
Witnessed By : (Name of ZMSD)	Name: WONG Cheong Shing CIE/TSC/I	Signature:	Date: 23 APR 2025
Witnessed By : (Name of)	Name:	Signature:	Date:

Gammon

CTA INTERNATIONAL AS

Air Purification System – HV Power Supply Units Test & Commissioning Report			
Contract No.:	HY/2019/13	RISC No.:	33641
Project:	Central Kowloon Route - Buildings, Electrical and Mechanical	Date:	23/4/2025
Location:	YVB / HVB / KVB	Room Name:	Plenum 1
T&C Plan Ref. No:	T3883-TVS-5-06287	Page:	
Ref. Dwg. No.:			

Part 4 : Functional and Performance Tests for HV Power Supply Units (Sheet 1 of 5)

A) Maximum Voltage Withstand Test for ESP Cell (TCP Section 4.6.1)

From:	ESP HV Switch Room 01 / 02	To:	APS Plenum No 01 / 02 / 03 Sub-assembly A / B / C / D / E

Step 1 & 3 - Insulation Resistance Test before and after the Maximum Voltage Withstand Test

Items	Circuit No. or Details of Equipment	Insulation Resistance (MΩ)	
		Before Max. Withstand Tests	After Max. Withstand Tests
1	(1st Col. Ionizer to Earth)	346 (Lower 3 ESP Cell) / 365 (Upper 3 ESP Cell)	305 (Lower 3 ESP Cell) / 352 (Upper 3 ESP Cell)
2	(2nd Col. Ionizer to Earth)	332 (Lower 3 ESP Cell) / 325 (Upper 3 ESP Cell)	286 (Lower 3 ESP Cell) / 360 (Upper 3 ESP Cell)
3	(3rd Col. Ionizer to Earth)	657 (Lower 3 ESP Cell) / 562 (Upper 3 ESP Cell)	493 (Lower 3 ESP Cell) / 552 (Upper 3 ESP Cell)
4	(1st to 3rd Col. Collector the Earth)	82.7 (1st Col.) / 56.9 (2nd Col.) / 40.9 (3rd Col.)	128 (1st Col.) / 78.5 (2nd Col.) / 55.2 (3rd Col.)

Step 2 - Maximum Voltage Withstand Test

Items	Test Voltage (kV DC)	Duration (min)	Measured Voltage (kV DC)	Test Result
1	20 (Ionizer)	1	20 / 19.6	P / F / NA
2	20 (Ionizer)		19.9 / 19.6	P / F / NA
3	20 (Ionizer)		20 / 19.8	P / F / NA
4	8 (Collector)	1	7.5	P / F / NA

B) List of Testing Equipment / Instruments

Type	Model	Serial No	Calibration Cert. No	Date of Cert.
HV insulation test	AR3125	68/9355	KS2525021278D001	25/02/2025
HV DC Voltage Meter	HVP-40DM	20240221	ACZ20250222 0090	03/03/2025

Remark: P / F / NA = Pass / Fail / Not Applicable
The passing criteria for the test is passing the insulation test after for maximum voltage withstand test.
The insulation resistance is over 1000MOhm (*) for HV DC Cable and 30MOhm for ESP Cell

Comment:

Test / Checked By : REW No.: Grade (Name of CTA Representative)	Name: Ho Tung	Signature:	Date: 23/4/2025
Witnessed By : (Name of JEC Representative)	Name: John Chan	Signature:	Date: 23/4/2025
Witnessed By : (Name of GCL)	Name: Raymond Lee	Signature:	Date: 23/4/2025
Witnessed By : (Name of Amsu)	Name: Sam Lui	Signature:	Date: 23/4/2025
Witnessed By : (Name of 3HSD)	Name: WONG Cheong Shing CIE/TSC/1	Signature:	Date: 23 APR 2025
Witnessed By : (Name of)	Name:	Signature:	Date:

Gammon

CTA INTERNATIONAL AS CLEAN TUNNEL AIR

Air Purification System – HV Power Supply Units Test & Commissioning Report			
Contract No.:	HY/2019/13	RISC No.:	33641
Project:	Central Kowloon Route - Buildings, Electrical and Mechanical	Date:	23/4/2025
Location:	YVB / HVB / KVB	Room Name:	Plenum 1
T&C Plan Ref. No:	J3883-TVS-S-06287	Page:	
Ref. Dwg. No.:			

Part 4 : Functional and Performance Tests for HV Power Supply Units (Sheet 1 of 5)

A) Maximum Voltage Withstand Test for ESP Cell (TCP Section 4.6.1)

From:	ESP HV Switch Room 01 / 02	To:	APS Plenum No.01 / 02 / 03 Sub-assembly A / B / C / D / E

Step 1 & 3 - Insulation Resistance Test before and after the Maximum Voltage Withstand Test

Items	Circuit No. or Details of Equipment	Insulation Resistance (MΩ)	
		Before Max. Withstand Tests	After Max. Withstand Tests
1	(1st Col. Ionizer to Earth)	385 (Lower 3 ESP Cell) / 390 (Upper 3 ESP Cell)	257 (Lower 3 ESP Cell) / 224 (Upper 3 ESP Cell)
2	(2nd Col. Ionizer to Earth)	586 (Lower 3 ESP Cell) / 382 (Upper 3 ESP Cell)	448 (Lower 3 ESP Cell) / 234 (Upper 3 ESP Cell)
3	(3rd Col. Ionizer to Earth)	460 (Lower 3 ESP Cell) / 313 (Upper 3 ESP Cell)	260 (Lower 3 ESP Cell) / 208 (Upper 3 ESP Cell)
4	(1st to 3rd Col. Collector the Earth)	101.1 (1st Col.) / 155 (2nd Col.) / 101 (3rd Col.)	124 (1st Col.) / 197 (2nd Col.) / 124 (3rd Col.)

Step 2 - Maximum Voltage Withstand Test

Items	Test Voltage (kV DC)	Duration (min)	Measured Voltage (kV DC)	Test Result
1	20 (Ionizer)	1	19.8/19.6	P / F / NA
2	20 (Ionizer)		19.9/19.8	P / F / NA
3	20 (Ionizer)		19.9/19.6	P / F / NA
4	8 (Collector)	1	7.5	P / F / NA

B) List of Testing Equipment / Instruments

Type	Model	Serial No	Calibration Cert. No	Date of Cert.
HV insulation test	AR3125	6819355	KS2525021218D001	25/02/2025
HV DC Voltage Meter	HVP-40DM	20240221	AC220250222 0090	03/03/2025

Remark: P / F / NA = Pass / Fail / Not Applicable
The passing criteria for the test is passing the insulation test after for maximum voltage withstand test.
The insulation resistance is over 1000MOhm (*) for HV DC Cable and 30MOhm for ESP Cell

Comment:

Test / Checked By : REW No.: Grade (Name of CTA Representative)	Name: Ho Tung	Signature:	Date: 23/4/2025
Witnessed By : (Name of JEC Representative)	Name: John Chan	Signature:	Date: 23/4/2025
Witnessed By : (Name of GCL)	Name: Raymond Lau	Signature:	Date: 23/4/2025
Witnessed By : (Name of AMMJV)	Name: Sam Lui	Signature:	Date: 23/4/2025
Witnessed By : (Name of ZHSD)	Name: WONG Cheong Shing CIE/TSC/1	Signature:	Date: 23 APR 2025
Witnessed By : (Name of)	Name:	Signature:	Date:

Gammon

CTA INTERNATIONAL AS CLEAN TUNNEL AIR

Air Purification System – HV Power Supply Units Test & Commissioning Report			
Contract No.:	HY/2019/13	RISC No.:	33641
Project:	Central Kowloon Route - Buildings, Electrical and Mechanical	Date:	23/4/2025
Location:	YVB / HVB / KVB	Room Name:	Plenum 1
T&C Plan Ref. No:	J3883-TVS-S-06287	Page:	
Ref. Dwg. No.:			

Part 4 : Functional and Performance Tests for HV Power Supply Units (Sheet 1 of 5)

A) Maximum Voltage Withstand Test for ESP Cell (TCP Section 4.6.1)

From:	ESP HV Switch Room 01 / 02	To:	APS Plenum No 01 / 02 / 03 Sub-assembly A / B / C / D / E

Step 1 & 3 - Insulation Resistance Test before and after the Maximum Voltage Withstand Test

Items	Circuit No. or Details of Equipment	Insulation Resistance (MΩ)	
		Before Max. Withstand Tests	After Max. Withstand Tests
1	(1st Col. Ionizer to Earth)	315 (Lower 3 ESP Cell) / 272 (Upper 3 ESP Cell)	237 (Lower 3 ESP Cell) / 142 (Upper 3 ESP Cell)
2	(2nd Col. Ionizer to Earth)	78 (Lower 3 ESP Cell) / 405 (Upper 3 ESP Cell)	7.26 (Lower 3 ESP Cell) / 211 (Upper 3 ESP Cell)
3	(3rd Col. Ionizer to Earth)	502 (Lower 3 ESP Cell) / 317 (Upper 3 ESP Cell)	102 (Lower 3 ESP Cell) / 226 (Upper 3 ESP Cell)
4	(1st to 3rd Col. Collector the Earth)	153 (1st Col.) / 101.6 (2nd Col.) / 101.9 (3rd Col.)	199 (1st Col.) / 142 (2nd Col.) / 129 (3rd Col.)

Step 2 - Maximum Voltage Withstand Test

Items	Test Voltage (kV DC)	Duration (min)	Measured Voltage (kV DC)	Test Result
1	20 (Ionizer)	1	20 / 19.6	P / F / NA
2	20 (Ionizer)		20 / 19.8	P / F / NA
3	20 (Ionizer)		20 / 19.8	P / F / NA
4	8 (Collector)	1	7.5	P / F / NA

B) List of Testing Equipment / Instruments

Type	Model	Serial No	Calibration Cert. No	Date of Cert.
HV insulation test	AR3125	6819355	KS252502278D001	25/02/2025
HV DC Voltage Meter	HVP-40DM	20240221	AC220250222 0090	03/03/2025

Remark: P / F / NA = Pass / Fail / Not Applicable
The passing criteria for the test is passing the insulation test after for maximum voltage withstand test.
The insulation resistance is over 1000MOhm (*) for HV DC Cable and 30MOhm for ESP Cell

Comment:

	Name:	Signature:	Date:
Test / Checked By : REW No.: Grade (Name of CTA Representative)	Ho Tung		23/04/2025
Witnessed By : (Name of JEC Representative)	John Chan		23/4/2025
Witnessed By : (Name of GCL)	Raymond Lau		23/4/2025
Witnessed By : (Name of AMMSL)	Sam Lai		23/4/2025
Witnessed By : (Name of ZMSD)	WONG Cheong Shing CIE/TSC/1		23 APR 2025
Witnessed By : (Name of)			

Gammon

CTA INTERNATIONAL AS

Air Purification System – HV Power Supply Units Test & Commissioning Report			
Contract No.:	HY/2019/13	RISC No.:	33641
Project:	Central Kowloon Route - Buildings, Electrical and Mechanical	Date:	23/4/2025
Location:	YVB / HVB / KVB	Room Name:	Plenum 1
T&C Plan Ref. No:	J3883-TVS-S-06283	Page:	
Ref. Dwg. No.:			

Part 4 : Functional and Performance Tests for HV Power Supply Units (Sheet 1 of 5)

A) Maximum Voltage Withstand Test for ESP Cell (TCP Section 4.6.1)

From:	ESP HV Switch Room 01 / 02	To:	APS Plenum No.01 / 02 / 03 Sub-assembly A / B / C / D / E

Step 1 & 3 - Insulation Resistance Test before and after the Maximum Voltage Withstand Test

Items	Circuit No. or Details of Equipment	Insulation Resistance (MΩ)	
		Before Max. Withstand Tests	After Max. Withstand Tests
1	(1st Col. Ionizer to Earth)	533 (Lower 3 ESP Cell) / 245 (Upper 3 ESP Cell)	376 (Lower 3 ESP Cell) / 275 (Upper 3 ESP Cell)
2	(2nd Col. Ionizer to Earth)	300 (Lower 3 ESP Cell) / 349 (Upper 3 ESP Cell)	257 (Lower 3 ESP Cell) / 388 (Upper 3 ESP Cell)
3	(3rd Col. Ionizer to Earth)	373 (Lower 3 ESP Cell) / 183 (Upper 3 ESP Cell)	375 (Lower 3 ESP Cell) / 170 (Upper 3 ESP Cell)
4	(1st to 3rd Col. Collector the Earth)	99.6 (1st Col.) / 116 (2nd Col.) / 78.6 (3rd Col.)	113 (1st Col.) / 172 (2nd Col.) / 87.3 (3rd Col.)

Step 2 - Maximum Voltage Withstand Test

Items	Test Voltage (kV DC)	Duration (min)	Measured Voltage (kV DC)	Test Result
1	20 (Ionizer)	1	20/19.6	P / F / NA
2	20 (Ionizer)		19.8/19.7	P / F / NA
3	20 (Ionizer)		20/19.7	P / F / NA
4	8 (Collector)	1	7.6	P / F / NA

B) List of Testing Equipment / Instruments

Type	Model	Serial No	Calibration Cert. No	Date of Cert.
HV insulation test	AR3125	6819355	KS2525021278D001	25/02/2025
HV DC Voltage Meter	HVP-40DM	20240221	AC220250222 0090	03/03/2025

Remark: P / F / NA = Pass / Fail / Not Applicable
The passing criteria for the test is passing the insulation test after for maximum voltage withstand test.
The insulation resistance is over 1000MOhm (*) for HV DC Cable and 30MOhm for ESP Cell

Comment:

Test / Checked By : REW No.: Grade (Name of CTA Representative)	Name: Ho Tung	Signature:	Date: 23/4/2025
Witnessed By : (Name of JEC Representative)	Name: John Chan	Signature:	Date: 23/4/2025
Witnessed By : (Name of GCL)	Name: Raymond Lau	Signature:	Date: 23/4/2025
Witnessed By : (Name of AMMJV)	Name:	Signature:	Date: 23/4/2025
Witnessed By : (Name of ZMSD)	Name: WONG Cheong Shing CIE/TSC/1	Signature:	Date: 23 APR 2025
Witnessed By : (Name of)	Name:	Signature:	Date:

Gammon

CTA INTERNATIONAL AS

Air Purification System – HV Power Supply Units Test & Commissioning Report			
Contract No.:	HY/2019/13	RISC No.:	32052
Project:	Central Kowloon Route - Buildings, Electrical and Mechanical	Date:	27/03/2025
Location:	YVB / HVB / KVB	Room Name:	Plenum 2
T&C Plan Ref. No:	J3883-TVS-S-0623	Page:	
Ref. Dwg. No.:			

Part 1 : Installation Inspection of ESP HV Power Supply Cabinets (Sheet 1 of 3)			
A) ESP HV Power Supply Cabinets Information			
Cabinets ID:	KVB-APS2-ESP-PSC-01	Main Switch Rating:	~~63A~~ 80A
Location:	ESP HV Switch Room 01 02	Supply Fed From:	KVB-DB-ESP02

B) Visual Inspection for ESP HV Power Supply Cabinets (TCP Section 4.3.1)

Items	Description of Inspection	Test Result
a.	Verify cabinets are installed per the accepted ESP HV Switch Room layout and plant room details	P / F / NA
b.	Check clearance space (≥1400mm front, ≥600mm rear) per EMSD CoP	P / F / NA
c.	Ensure cabinets are securely fixed, sealed, and free of damage, corrosion, wear, or dust	P / F / NA
d.	Check that the cabinet door, door handle and lock are installed and operated properly	P / F / NA
C) Visual Inspection for Cabinet Top Cooling Units (TCP Section 4.3.2)		
a.	Check that the cabinet top cooling units are without visual damage, corrosion or sign of wear and tear	P / F / NA
b.	Check that the cabinet top cooling unit is securely fixed on top of the cabinets according to the accepted shop drawing and fabrication drawing	P / F / NA
c.	Check the exhaust lourve of the cabinet cooling unit to ensure no obstructions or blockages	P / F / NA
d.	Check the internal air duct is connected properly with the cabinet top cooling unit	P / F / NA
e.	Check the cable connection between cabinet and cooling unit are completed properly	P / F / NA

Remark: P / F / NA = Pass / Fail / Not Applicable

Comment:

Test / Checked By : REW No.: W134523 Grade A (Name of CTA Representative)	Name: LAI LEONG TAI	Signature:	Date: 27/03/2025
Witnessed By : (Name of JEC Representative)	Name: TONY HO	Signature:	Date: 27/03/2025
Witnessed By : (Name of GCL)	Name: Raymond Lau	Signature:	Date: 27/03/2025
Witnessed By : (Name of AMMSV)	Name: Sam Lui	Signature:	Date: 27/03/2025
Witnessed By : (Name of EMSD)	Name: WONG Cheong Shing CIE/TSC/1	Signature:	Date: 27 MAR 2025
Witnessed By : (Name of)	Name:	Signature:	Date:

Gammon

CIA INTERNATIONAL AS

Air Purification System – HV Power Supply Units Test & Commissioning Report			
Contract No.:	HY/2019/13	RISC No.:	32052
Project:	Central Kowloon Route - Buildings, Electrical and Mechanical	Date:	27/03/2025
Location:	YVB / HVB / KVB	Room Name:	Plenum 2
T&C Plan Ref. No:	55883-TVS-S-06283	Page:	
Ref. Dwg. No.:			

Part 1 : Installation Inspection of ESP HV Power Supply Cabinets (Sheet 2 of 3)		
Items	**Description of Inspection**	**Test Result**
D) Visual Inspection for ESP HV Power Supply Units (TCP Section 4.3.3)		
a.	No visible damage to impair safety	P / F / NA
b.	Check that the ESP HV power supply units are securely fixed inside the Power Supply Cabinet with no physical damage, or signs of deterioration	P / F / NA
c.	Check and record the equipment ID, manufacturer, model number, serial number and other information, showing on the name plate for cabinet top cooling unit and ESP HV power supply units, and record it the initial installed location on the test form	P / F / NA
E) Visual Inspection for Accessories inside the Cabinet (TCP Section 4.3.4)		
a.	Check that the limit switch is securely fixed on rear door of the cabinet with proper cabling works	P / F / NA
Remark:	P / F / NA = Pass / Fail / Not Applicable	
Comment:		

Test / Checked By : REW No.: W134523 Grade A (Name of CTA Representative)	Name: LOI LEONG TAI	Signature:	Date: 27/03/2025
Witnessed By : (Name of JEC Representative)	Name: TONY	Signature:	Date: 27/03/2025
Witnessed By : (Name of GCL)	Name: Raymond Lau	Signature:	Date: 27/03/2025
Witnessed By : (Name of AMMSV)	Name: SOM LAI	Signature:	Date: 27/03/2025
Witnessed By : (Name of ZMSD)	Name: WONG Cheong Shing CIE/TSC/1	Signature:	Date: 27 MAR 2025
Witnessed By : (Name of)	Name:	Signature:	Date:

Gammon

CIA INTERNATIONAL AS CLEAN TUNNEL AIR

Air Purification System – HV Power Supply Units Test & Commissioning Report			
Contract No.:	HY/2019/13	RISC No.:	32052
Project:	Central Kowloon Route - Buildings, Electrical and Mechanical	Date:	27/03/2025
Location:	YVB / HVB / KVB	Room Name:	Plenum 2
T&C Plan Ref. No:	J5883-TVS-S-06283	Page:	
Ref. Dwg. No.:			

Part 1 : Installation Inspection of ESP HV Power Supply Cabinets (Sheet 1 of 3)			
A) ESP HV Power Supply Cabinets Information			
Cabinets ID:	KVB-APS2-ESP-PSC-02	Main Switch Rating:	~~63~~ 80A
Location:	ESP HV Switch Room 01/02	Supply Fed From:	KVB-DB-ESP02

B) Visual Inspection for ESP HV Power Supply Cabinets (TCP Section 4.3.1)

Items	Description of Inspection	Test Result
a.	Verify cabinets are installed per the accepted ESP HV Switch Room layout and plant room details	P / F / NA
b.	Check clearance space (≥1400mm front, ≥600mm rear) per EMSD CoP	P / F / NA
c.	Ensure cabinets are securely fixed, sealed, and free of damage, corrosion, wear, or dust	P / F / NA
d.	Check that the cabinet door, door handle and lock are installed and operated properly	P / F / NA
C) Visual Inspection for Cabinet Top Cooling Units (TCP Section 4.3.2)		
a.	Check that the cabinet top cooling units are without visual damage, corrosion or sign of wear and tear	P / F / NA
b.	Check that the cabinet top cooling unit is securely fixed on top of the cabinets according to the accepted shop drawing and fabrication drawing	P / F / NA
c.	Check the exhaust lourve of the cabinet cooling unit to ensure no obstructions or blockages	P / F / NA
d.	Check the internal air duct is connected properly with the cabinet top cooling unit	P / F / NA
e.	Check the cable connection between cabinet and cooling unit are completed properly	P / F / NA
Remark:	P / F / NA = Pass / Fail / Not Applicable	
Comment:		

Test / Checked By : REW No.: W134523 Grade A (Name of CTA Representative)	Name: LAI LEONG JAY	Signature:	Date: 27/03/2025
Witnessed By : (Name of JEC Representative)	Name: Tony Ho	Signature:	Date: 27/03/2025
Witnessed By : (Name of GCL)	Name: Raymond Lau	Signature:	Date: 27/03/2025
Witnessed By : (Name of AMMSV)	Name: Sam Lui	Signature:	Date: 27/03/2025
Witnessed By : (Name of EMSD)	Name: WONG Cheong Shing CIE/TSC/1	Signature:	Date: 27 MAR 2025
Witnessed By : (Name of)	Name:	Signature:	Date:

Gammon

CIA INTERNATIONAL AS

Air Purification System – HV Power Supply Units Test & Commissioning Report			
Contract No.:	HY/2019/13	RISC No.:	32052
Project:	Central Kowloon Route - Buildings, Electrical and Mechanical	Date:	27/03/2025
Location:	YVB / HVB / KVB	Room Name:	Plenum 2
T&C Plan Ref. No:	J3883-TVS-S-06283	Page:	
Ref. Dwg. No.:			

Part 1 : Installation Inspection of ESP HV Power Supply Cabinets (Sheet 2 of 3)		
Items	**Description of Inspection**	**Test Result**
D) Visual Inspection for ESP HV Power Supply Units (TCP Section 4.3.3)		
a.	No visible damage to impair safety	P / F / NA
b.	Check that the ESP HV power supply units are securely fixed inside the Power Supply Cabinet with no physical damage, or signs of deterioration	P / F / NA
c.	Check and record the equipment ID, manufacturer, model number, serial number and other information, showing on the name plate for cabinet top cooling unit and ESP HV power supply units, and record it the initial installed location on the test form	P / F / NA
E) Visual Inspection for Accessories inside the Cabinet (TCP Section 4.3.4)		
a.	Check that the limit switch is securely fixed on rear door of the cabinet with proper cabling works	P / F / NA
Remark:	P / F / NA = Pass / Fail / Not Applicable	
Comment:		

Test / Checked By : REW No.: W13452 Grade A (Name of CTA Representative)	Name: LAI LEONG	Signature:	Date: 27/03/2025
Witnessed By : (Name of JEC Representative)	Name: Tony	Signature:	Date: 27/03/2025
Witnessed By : (Name of GCL)	Name: Raymond Lau	Signature:	Date: 27/03/2025
Witnessed By : (Name of AMMSV)	Name: Sam Lui	Signature:	Date: 27/03/2025
Witnessed By : (Name of ZMSD)	Name: WONG Cheong Shing CIE/TSC/1	Signature:	Date: 27 MAR 2025
Witnessed By : (Name of)	Name:	Signature:	Date:

Gammon

CIA INTERNATIONAL AS CLEAN TUNNEL A/S

Air Purification System – HV Power Supply Units Test & Commissioning Report

Contract No.:	HY/2019/13	RISC No.:	032053
Project:	Central Kowloon Route - Buildings, Electrical and Mechanical	Date:	3/4/2025
Location:	YVB / HVB / KVB	Room Name:	Plenum 2
T&C Plan Ref. No:	13883 - TVS - S - 6283	Page:	
Ref. Dwg. No.:	13883 - TVS - D - 2432		

Part 2: Installation Inspection and Cable Tests for HV DC Cables (Sheet 1 of 2)

A) Visual Inspection (TCP Section 4.4.1)

Items	Description of Inspection	Test Result
a)	No visible damage to impair safety	P / F / NA
b)	Ensure all cables, HV connectors, cable glands & accessories are in good condition	P / F / NA
c)	All conductors are correctly and securely connected and identified, protected against mechanical damage, and adequately supported	P / F / NA

B) HV DC Cable Continuity Tests (TCP Section 4.4.2)

From: ESP HV Switch Room 01 / 02 To: APS Plenum No.01 / 02 / 03 Sub-assembly A / B / C / D / E

Items	Circuit No. or Details of Equipment	Cable Length	Continuity Resistance (Ω) Measured	Calculated	Passing Criteria	Test Result
1	KVB-APS2-HVC-1 Ionizer 1	35.4m	1.08	0.54	0.87	P / F / NA
2	KVB-APS2-HVC-2 Ionizer 2	35.1m		0.54	0.86	P / F / NA
3	KVB-APS2-HVC-3 Ionizer 3	34.5m	0.97	0.49	0.85	P / F / NA
4	KVB-APS2-HVC-4 Collector	34.2m		0.48	0.84	P / F / NA

C) List of Testing Equipment / Instruments

Type	Model	Serial No	Calibration Cert. No	Date of Cert.
Digital Micro Ohmmeter	UT620C+	C242921984	AC2202502220127	22/02/2025
Cable fault tester	LCT268-2(km)	250219005	AC2202502220090	22/02/2025

Remark: P / F / NA = Pass / Fail / Not Applicable
Insulation Resistance should be >1000MΩ, Continuity Resistance shall be < 0.0245Ω/m **(B)**

Comment:

Test / Checked By : REW No.: Grade (Name of CTA Representative)	Name: Ho Tung	Signature:	Date: 03 APR 2025
Witnessed By : (Name of JEC Representative)	Name: Tony Ho	Signature:	Date: 03 APR 2025
Witnessed By : (Name of GCL)	Name: Crystal Cheung	Signature:	Date: 03 APR 2025
Witnessed By : (Name of AMMJV)	Name: Sam Lai	Signature:	Date: 03/4/2025
Witnessed By : (Name of ZMSD)	Name: WONG Cheong Shing CIE/TSC/1	Signature:	Date: - 3 APR 2025
Witnessed By : (Name of)	Name:	Signature:	Date:

Gammon

CIA INTERNATIONAL AS CLEAN TUNNEL AIR

Air Purification System – HV Power Supply Units Test & Commissioning Report			
Contract No.:	HY/2019/13	RISC No.:	032053
Project:	Central Kowloon Route - Buildings, Electrical and Mechanical	Date:	3/4/2025
Location:	YVB / HVB / KVB	Room Name:	Plenum 2
T&C Plan Ref. No:	TS883 - TWS - S - 6283	Page:	
Ref. Dwg. No.:	TS883 - TWS - D - 2432		

Part 2: Installation Inspection and Cable Tests for HV DC Cables (Sheet 1 of 2)

A) Visual Inspection (TCP Section 4.4.1)

Items	Description of Inspection	Test Result
a)	No visible damage to impair safety	P / F / NA
b)	Ensure all cables, HV connectors, cable glands & accessories are in good condition	P / F / NA
c)	All conductors are correctly and securely connected and identified, protected against mechanical damage, and adequately supported	P / F / NA

B) HV DC Cable Continuity Tests (TCP Section 4.4.2)

From: ESP HV Switch Room 01 / 02 To: APS Plenum No.01 / 02 / 03 Sub-assembly A / B / C / D / E

Items	Circuit No. or Details of Equipment	Cable Length	Continuity Resistance (Ω) Measured	Calculated	Passing Criteria	Test Result
1	KVB-APS2-HVC-5 Ionizer 1	33.9m	0.96	0.48	0.83	P / F / NA
2	KVB-APS2-HVC-6 Ionizer 2	33.6m		0.48	0.82	P / F / NA
3	KVB-APS2-HVC-7 Ionizer 3	33.1m ~~33.1m~~	0.86	0.43	0.81	P / F / NA
4	KVB-APS2-HVC-8 Collector	32.5m		0.43	0.80	P / F / NA

C) List of Testing Equipment / Instruments

Type	Model	Serial No	Calibration Cert. No	Date of Cert.
Digital Micro Ohmeter	UT620C+	C242921984	ACZ20250220127	22/02/2025
Cable fault tester	LCT268-2(km)	250219005	ACZ20250222 0090	22/02/2025

Remark: P / F / NA = Pass / Fail / Not Applicable
Insulation Resistance should be >1000MΩ, Continuity Resistance shall be < 0.0245Ω/m **(B)**

Comment:

	Name:	Signature:	Date:
Test / Checked By : REW No.: Grade (Name of CTA Representative)	Ho Tung		03 APR 2025
Witnessed By : (Name of JEC Representative)	Tony Ho		03 APR 2025
Witnessed By : (Name of GCL)	Crystal Cheung		03 APR 2025
Witnessed By : (Name of AMMSV)	Sam Lui		03/04/2025
Witnessed By : (Name of ZMSD)	WONG Cheong Shing CIE/TSC/1		- 3 APR 2025
Witnessed By : (Name of)			

Gammon

CIA INTERNATIONAL AS CLEAN TUNNEL AIR

Air Purification System – HV Power Supply Units Test & Commissioning Report			
Contract No.:	HY/2019/13	RISC No.:	032053
Project:	Central Kowloon Route - Buildings, Electrical and Mechanical	Date:	3/4/2025
Location:	YVB / HVB / KVB	Room Name:	Plenum 2
T&C Plan Ref. No:	TS883 - TVS - S - 6283	Page:	
Ref. Dwg. No.:	TS883 - TVS - D - 2932		

Part 2: Installation Inspection and Cable Tests for HV DC Cables (Sheet 1 of 2)

A) Visual Inspection (TCP Section 4.4.1)

Items	Description of Inspection	Test Result
a)	No visible damage to impair safety	P / F / NA
b)	Ensure all cables, HV connectors, cable glands & accessories are in good condition	P / F / NA
c)	All conductors are correctly and securely connected and identified, protected against mechanical damage, and adequately supported	P / F / NA

B) HV DC Cable Continuity Tests (TCP Section 4.4.2)

From:	ESP HV Switch Room 01 / 02	To:	APS Plenum No.01 / 02 / 03 Sub-assembly A / B / C / D / E

Items	Circuit No. or Details of Equipment	Cable Length	Continuity Resistance (Ω) Measured	Calculated	Passing Criteria	Test Result
1	K VB-APS 2 -HVC- 9 Ionizer 1	32.2m	0.8	0.40	0.79	P / F / NA
2	K VB-APS 2 -HVC- 10 Ionizer 2	32.2m		0.40	0.79	P / F / NA
3	K VB-APS 2 -HVC- 11 Ionizer 3	29.8m	0.62	0.31	0.73	P / F / NA
4	K VB-APS 2 -HVC- 12 Collector	29.3m		0.31	0.73	P / F / NA

C) List of Testing Equipment / Instruments

Type	Model	Serial No	Calibration Cert. No	Date of Cert.
Digital Micro Ohmmeter	UT620C+	C242921984	AC2202502220127	22/02/2025
Cable fault tester	LCT268-2(km)	250219005	AC2202502220090	22/02/2025

Remark: P / F / NA = Pass / Fail / Not Applicable
Insulation Resistance should be >1000MΩ, Continuity Resistance shall be < 0.0245Ω/m **(B)**

Comment:

	Name:	Signature:	Date:
Test / Checked By : REW No.: Grade (Name of CTA Representative)	Ho Tung		03 APR 2025
Witnessed By : (Name of JEC Representative)	Tony Ho		03 APR 2025
Witnessed By : (Name of GCL)	Crystal Cheung		03 APR 2025
Witnessed By : (Name of MMSL)	Sam Lui		03/04/2025
Witnessed By : (Name of ZMSD)	WONG Cheong Shing CIE/TSC/1		- 3 APR 2025
Witnessed By : (Name of)			

Gammon

CTA INTERNATIONAL AS

Air Purification System – HV Power Supply Units Test & Commissioning Report			
Contract No.:	HY/2019/13	RISC No.:	32053
Project:	Central Kowloon Route - Buildings, Electrical and Mechanical	Date:	03 APR 2025
Location:	YVB / HVB / KVB	Room Name:	Plenum 2
T&C Plan Ref. No:	TS883-TVS-S-6283	Page:	
Ref. Dwg. No.:	TS883-TVS-D-2C832		

Part 2: Installation Inspection and Cable Tests for HV DC Cables (Sheet 1 of 2)

A) Visual Inspection (TCP Section 4.4.1)

Items	Description of Inspection	Test Result
a)	No visible damage to impair safety	(P) / F / NA
b)	Ensure all cables, HV connectors, cable glands & accessories are in good condition	(P) / F / NA
c)	All conductors are correctly and securely connected and identified, protected against mechanical damage, and adequately supported	(P) / F / NA

B) HV DC Cable Continuity Tests (TCP Section 4.4.2)

From:	ESP HV Switch Room (01) / 02	To:	APS Plenum No.01 (02) / 03 Sub-assembly A / B / C / (D) / E

Items	Circuit No. or Details of Equipment	Cable Length	Continuity Resistance (Ω) Measured	Calculated	Passing Criteria	Test Result
1	KVB-APS2-HVC-13 Ionizer 1	29.5m	0.6	0.30	0.72	(P) / F / NA
2	KVB-APS2-HVC-14 Ionizer 2	29.0m		0.30	0.71	(P) / F / NA
3	KVB-APS2-HVC-15 Ionizer 3	28.4m	0.55	0.28	0.70	(P) / F / NA
4	KVB-APS02-HVC-16 Collector	27.8m		0.27	0.68	(P) / F / NA

C) List of Testing Equipment / Instruments

Type	Model	Serial No	Calibration Cert. No	Date of Cert.
Digital Micro Ohmeter	UT620C+	C242921984	AC2202502220127	22/02/2025
Cable fault tester	LCT268-2(km)	250219005	AC2202502220090	22/02/2025

Remark: P / F / NA = Pass / Fail / Not Applicable
Insulation Resistance should be >1000MΩ, Continuity Resistance shall be < 0.0245Ω/m **(B)**

Comment:

	Name:	Signature:	Date:
Test / Checked By : REW No.: Grade (Name of CTA Representative)	Ho Tung		03 APR 2025
Witnessed By : (Name of JEC Representative)	Tony Ho		03 APR 2025
Witnessed By : (Name of GCL)	Crystal Cheung		03 APR 2025
Witnessed By : (Name of MMJV)	Sam Lui		03/04/2025
Witnessed By : (Name of ZHSD)	WONG Cheong Shing CIE/TSC/1		- 3 APR 2025
Witnessed By : (Name of)			

Gammon

CIA INTERNATIONAL AS CLEAN TUNNEL AIR

Air Purification System – HV Power Supply Units Test & Commissioning Report

Contract No.:	HY/2019/13	RISC No.:	32053
Project:	Central Kowloon Route - Buildings, Electrical and Mechanical	Date:	03 APR 2025
Location:	YVB / HVB / KVB	Room Name:	Plenum 2
T&C Plan Ref. No:	TBF83 - TVS - S - 6283	Page:	
Ref. Dwg. No.:	TBF83 - TVS - D - 25432		

Part 2: Installation Inspection and Cable Tests for HV DC Cables (Sheet 1 of 2)

A) Visual Inspection (TCP Section 4.4.1)

Items	Description of Inspection	Test Result
a)	No visible damage to impair safety	(P) / F / NA
b)	Ensure all cables, HV connectors, cable glands & accessories are in good condition	(P) / F / NA
c)	All conductors are correctly and securely connected and identified, protected against mechanical damage, and adequately supported	(P) / F / NA

B) HV DC Cable Continuity Tests (TCP Section 4.4.2)

From: ESP HV Switch Room (01) / 02 To: APS Plenum No.01 / (02) / 03 Sub-assembly A / B / C / D / (E)

Items	Circuit No. or Details of Equipment	Cable Length	Continuity Resistance (Ω) Measured	Calculated	Passing Criteria	Test Result
1	KVB-APS2-HVC-17 Ionizer 1	27.8m	0.6	0.30	0.68	(P) / F / NA
2	KVB-APS2-HVC-18 Ionizer 2	27.5m		0.30	0.67	(P) / F / NA
3	KVB-APS2-HVC-19 Ionizer 3	27.5m	0.64	0.32	0.67	(P) / F / NA
4	KVB-APS2-HVC-20 Collector	27.2m		0.32	0.67	(P) / F / NA

C) List of Testing Equipment / Instruments

Type	Model	Serial No	Calibration Cert. No	Date of Cert.
Digital Micro Ohmeter	U7620 C+	C242921984	AC220250220127	22/02/2025
Cable fault tester	LCT268-2(km)	250219005	AC220250222009a	22/02/2025

Remark: P / F / NA = Pass / Fail / Not Applicable
Insulation Resistance should be >1000MΩ, Continuity Resistance shall be < 0.0245Ω/m **(B)**

Comment:

Test / Checked By : REW No.: Grade (Name of CTA Representative)	Name: Ho Tung	Signature:	Date: 03 APR 2025
Witnessed By : (Name of JEC Representative)	Name: Tony Ho	Signature:	Date: 03 APR 2025
Witnessed By : (Name of GCL)	Name: Crystal Cheung	Signature:	Date: 03 APR 2025
Witnessed By : (Name of AMUSU)	Name: Sam Lui	Signature:	Date: 03/04/2025
Witnessed By : (Name of ZMSD)	Name: WONG Cheong Shing CIE/TSC/1	Signature:	Date: - 3 APR 2025
Witnessed By : (Name of)	Name:	Signature:	Date:

Gammon

CIA INTERNATIONAL AS CLEAN TUNNEL A/S

Air Purification System – HV Power Supply Units Test & Commissioning Report			
Contract No.:	HY/2019/13	RISC No.:	032053
Project:	Central Kowloon Route - Buildings, Electrical and Mechanical	Date:	3/4/2025
Location:	~~KVB / HVB /~~ KVB	Room Name:	Plenum 2
T&C Plan Ref. No:	13883-TVS-S-6283	Page:	
Ref. Dwg. No.:	13883-TVS-D-2432		

Part 2: Installation Inspection and Cable Tests for HV DC Cables (2 of 2)

D) Maximum Voltage Withstand Test for HV DC Cable (TCP Section 4.4.3)

Step 1 & 3 - Insulation Resistance Test before and after the Maximum Voltage Withstand Test

From: ESP HV Switch Room 01 / 02 To: APS Plenum No.01 / 02 / 03 Sub-assembly A / B / C / D / E

Items	Circuit No. or Details of Equipment	Cable Length	Insulation Resistance (MΩ) before Step 2	Insulation Resistance (MΩ) after Step 2	Test Result
1	KVB-APS02-HVC-1 Ionizer 1	35.4m	7.48 GΩ	704.0 GΩ	P / F / NA
2	KVB-APS02-HVC-2 Ionizer 2	35.1m	206 GΩ	239.0 GΩ	P / F / NA
3	KVB-APS02-HVC-3 Ionizer 3	34.5m	20.1 GΩ	235.0 GΩ	P / F / NA
4	KVB-APS02-HVC-4 Collector	34.2m	37.0 GΩ	180.0 GΩ	P / F / NA

Step 2 - Maximum Voltage Withstand Test

Items	Circuit No. or Details of Equipment	Test Voltage (kV DC)	Duration (Min)	Measured Voltage
1	KVB-APS02-HVC-1 Ionizer 1	20	1	20.3 kV
2	KVB-APS02-HVC-2 Ionizer 2	20	1	20.3 kV
3	KVB-APS02-HVC-3 Ionizer 3	20	1	20.3 kV
4	KVB-APS02-HVC-4 Collector	20	1	20.3 kV

E) List of Testing Equipment / Instruments

Type	Model	Serial No	Calibration Cert. No	Date of Cert.
HV insulation tester	AR3125	6819355	KS252502127 8D001	26/02/2025
HV DC Voltage Meter	HVP-40DM	20240221	AC220250303080 2	03/03/2025

Remark: P / F / NA = Pass / Fail / Not Applicable,
The passing criteria for the test is passing the insulation test after for maximum voltage withstand test.
The insulation resistance is over 1000MOhm (*) for HV DC Cable and 30MOhm for ESP Cell

Comment:

Test / Checked By : REW No.: Grade (Name of CTA Representative)	Name: Ho Tung	Signature:	Date: 03 APR 2025
Witnessed By : (Name of JEC Representative)	Name: Tony Ho	Signature:	Date: 03 APR 2025
Witnessed By : (Name of GCL)	Name: Crystal Cheung	Signature:	Date: 03 APR 2025
Witnessed By : (Name of AMMJV)	Name: Sam Lai	Signature:	Date: 03/04/2025
Witnessed By : (Name of EMSD)	Name: WONG Cheong Shing CIE/TSC/1	Signature:	Date: - 3 APR 2025
Witnessed By : (Name of)	Name:	Signature:	Date:

Gammon

CIA INTERNATIONAL AS CLEAN TUNNEL AIR

Air Purification System – HV Power Supply Units Test & Commissioning Report			
Contract No.:	HY/2019/13	RISC No.:	32053
Project:	Central Kowloon Route - Buildings, Electrical and Mechanical	Date:	03 APR 2025
Location:	YVB / HVB / KVB	Room Name:	Plenum 2
T&C Plan Ref. No:	J3883-TVS-S-6283	Page:	
Ref. Dwg. No.:	J3883-TVS-D-2432		

Part 2: Installation Inspection and Cable Tests for HV DC Cables (2 of 2)

D) Maximum Voltage Withstand Test for HV DC Cable (TCP Section 4.4.3)

Step 1 & 3 - Insulation Resistance Test before and after the Maximum Voltage Withstand Test

From: ESP HV Switch Room 01 / 02 To: APS Plenum No.01 / 02 / 03 Sub-assembly A / B / C / D / E

Items	Circuit No. or Details of Equipment	Cable Length	Insulation Resistance (MΩ) before Step 2	Insulation Resistance (MΩ) after Step 2	Test Result
1	KVB-APS02-HVC-5 Ionizer 1	33.9m	33.3 GΩ	56.8 GΩ	P / F / NA
2	KVB-APS02-HVC-6 Ionizer 2	33.6m	35.6 GΩ	234.0 GΩ	P / F / NA
3	KVB-APS02-HVC-7 Ionizer 3	33.1m	23.3 GΩ	239.0 GΩ	P / F / NA
4	KVB-APS02-HVC-8 Collector	32.5m	12.1 GΩ	78.2 GΩ	P / F / NA

Step 2 - Maximum Voltage Withstand Test

Items	Circuit No. or Details of Equipment	Test Voltage (kV DC)	Duration (Min)	Measured Voltage
1	KVB-APS02-HVC-5 Ionizer 1	20	1	20.3 kV
2	KVB-APS02-HVC-6 Ionizer 2	20	1	20.3 kV
3	KVB-APS02-HVC-7 Ionizer 3	20	1	20.3 kV
4	KVB-APS02-HVC-8 Collector	20	1	20.3 kV

E) List of Testing Equipment / Instruments

Type	Model	Serial No	Calibration Cert. No	Date of Cert.
HV insulation tester	AR3125	6819355	KS2525021278D001	26/02/2025
HVDC Voltage Meter	HVP-40DM	20240221	AC2202503050802	03/03/2025

Remark: P / F / NA = Pass / Fail / Not Applicable,
The passing criteria for the test is passing the insulation test after for maximum voltage withstand test.
The insulation resistance is over 1000MOhm (*) for HV DC Cable and 30MOhm for ESP Cell

Comment:

Test / Checked By : REW No.: Grade (Name of CTA Representative)	Name: Ho Tung	Signature:	Date: 03 APR 2025
Witnessed By : (Name of JEC Representative)	Name: Tony Ho	Signature:	Date: 03 APR 2025
Witnessed By : (Name of GCL)	Name: Crystal Cheung	Signature:	Date: 03 APR 2025
Witnessed By : (Name of AMSA)	Name: Sam Lai	Signature:	Date: 03/04/2025
Witnessed By : (Name of ZMSD)	Name: WONG Cheong Shing CIE/TSC/1	Signature:	Date: - 3 APR 2025
Witnessed By : (Name of)	Name:	Signature:	Date:

Gammon

CIA INTERNATIONAL AS CLEAN TUNNEL AIR

Air Purification System – HV Power Supply Units Test & Commissioning Report

Contract No.:	HY/2019/13	RISC No.:	32053
Project:	Central Kowloon Route - Buildings, Electrical and Mechanical	Date:	03 APR 2025
Location:	YVB / HVB / KVB	Room Name:	Plenum 2
T&C Plan Ref. No:	T3883-TVS-S-0283	Page:	
Ref. Dwg. No.:	T3883-TVS-D-2532		

Part 2: Installation Inspection and Cable Tests for HV DC Cables (2 of 2)

D) Maximum Voltage Withstand Test for HV DC Cable (TCP Section 4.4.3)

Step 1 & 3 - Insulation Resistance Test before and after the Maximum Voltage Withstand Test

From: ESP HV Switch Room 01 / 02 To: APS Plenum No.01 / 02 / 03 Sub-assembly A / B / C / D / E

Items	Circuit No. or Details of Equipment	Cable Length	Insulation Resistance (MΩ) before Step 2	Insulation Resistance (MΩ) after Step 2	Test Result
1	KVB-APS02-HVC-9 Ionizer 1	32.2m	29.6 GΩ	212.0 GΩ	P / F / NA
2	KVB-APS02-HVC-10 Ionizer 2	32.2m	21.1 GΩ	227.0 GΩ	P / F / NA
3	KVB-APS02-HVC-11 Ionizer 3	29.8m	12.9 GΩ	32.5 GΩ	P / F / NA
4	KVB-APS02-HVC-12 Collector	29.3m	38.7 GΩ	268.0 GΩ	P / F / NA

Step 2 - Maximum Voltage Withstand Test

Items	Circuit No. or Details of Equipment	Test Voltage (kV DC)	Duration (Min)	Measured Voltage
1	KVB-APS02-HVC-9 Ionizer 1	20	1	20.3 kV
2	KVB-APS02-HVC-10 Ionizer 2	20	1	20.3 kV
3	KVB-APS02-HVC-11 Ionizer 3	20	1	20.3 kV
4	KVB-APS02-HVC-12 Collector	20	1	20.3 kV

E) List of Testing Equipment / Instruments

Type	Model	Serial No	Calibration Cert. No	Date of Cert.
HV insulation tester	AR3125	6819355	KS2525020280001	26/02/2025
HV DC Voltage Meter	HVP-40DM	20240221	ACZ202503030802	03/03/2025

Remark: P / F / NA = Pass / Fail / Not Applicable,
The passing criteria for the test is passing the insulation test after for maximum voltage withstand test.
The insulation resistance is over 1000MOhm (*) for HV DC Cable and 30MOhm for ESP Cell

Comment:

Test / Checked By : REW No.: Grade (Name of CTA Representative)	Name: Ho Tung	Signature:	Date: 03 APR 2025
Witnessed By : (Name of JEC Representative)	Name: Tony Ho	Signature:	Date: 03 APR 2025
Witnessed By : (Name of GCL)	Name: Crystal Cheung	Signature:	Date: 03 APR 2025
Witnessed By : (Name of AMMSU)	Name: Sam Lui	Signature:	Date: 03/04/2025
Witnessed By : (Name of ZMSD)	Name: WONG Cheong Shing CIE/TSC/1	Signature:	Date: - 3 APR 2025
Witnessed By : (Name of)	Name:	Signature:	Date:

Gammon

CIA INTERNATIONAL AS CLEAN TUNNEL AIR

Air Purification System – HV Power Supply Units Test & Commissioning Report

Contract No.:	HY/2019/13	RISC No.:	32053
Project:	Central Kowloon Route - Buildings, Electrical and Mechanical	Date:	03 APR 2025
Location:	YVB / HVB / KVB	Room Name:	plenum 2
T&C Plan Ref. No:	TS883-TW-S-6583	Page:	
Ref. Dwg. No.:	TS883-TW-D-2432		

Part 2: Installation Inspection and Cable Tests for HV DC Cables (2 of 2)

D) Maximum Voltage Withstand Test for HV DC Cable (TCP Section 4.4.3)

Step 1 & 3 - Insulation Resistance Test before and after the Maximum Voltage Withstand Test

From: ESP HV Switch Room 01 / 02 To: APS Plenum No.01 / 02 / 03 Sub-assembly A / B / C / D / E

Items	Circuit No. or Details of Equipment	Cable Length	Insulation Resistance (MΩ) before Step 2	Insulation Resistance (MΩ) after Step 2	Test Result
1	KVB-APS02-HVC-13 Ionizer 1	29.5m	81.6 GΩ	133.0 GΩ	P / F / NA
2	KVB-APS02-HVC-14 Ionizer 2	29.0m	51.1 GΩ	266.0 GΩ	P / F / NA
3	KVB-APS02-HVC-15 Ionizer 3	28.4m	48.6 GΩ	152.0 GΩ	P / F / NA
4	KVB-APS02-HVC-16 Collector	27.8m	126.0 GΩ	224.0 GΩ	P / F / NA

Step 2 - Maximum Voltage Withstand Test

Items	Circuit No. or Details of Equipment	Test Voltage (kV DC)	Duration (Min)	Measured Voltage
1	KVB-APS02-HVC-13 Ionizer 1	20	1	20.3 kV
2	KVB-APS02-HVC-14 Ionizer 2	20	1	20.3 kV
3	KVB-APS02-HVC-15 Ionizer 3	20	1	20.3 kV
4	KVB-APS02-HVC-16 Collector	20	1	20.3 kV

E) List of Testing Equipment / Instruments

Type	Model	Serial No	Calibration Cert. No	Date of Cert.
HV insulation tester	AR3125	6819355	KS2525021278D001	26/02/2025
HV DC Voltage Meter	HVP-40DM	20240221	AC220250303 0802	03/03/2025

Remark: P / F / NA = Pass / Fail / Not Applicable,
The passing criteria for the test is passing the insulation test after for maximum voltage withstand test.
The insulation resistance is over 1000MOhm (*) for HV DC Cable and 30MOhm for ESP Cell

Comment:

Test / Checked By : REW No.: Grade (Name of CTA Representative)	Name: Ho Tuy	Signature:	Date: 03 APR 2025
Witnessed By : (Name of JEC Representative)	Name: Tony Ho	Signature:	Date: 03 APR 2025
Witnessed By : (Name of GCL)	Name: Crystal Cheung	Signature:	Date: 03 APR 2025
Witnessed By : (Name of AMMSU)	Name: Sam Lai	Signature:	Date: 03/04/2025
Witnessed By : (Name of ZMSD)	Name: WONG Cheong Shing CIE/TSC/1	Signature:	Date: - 3 APR 2025
Witnessed By : (Name of)	Name:	Signature:	Date:

Gammon

CIA INTERNATIONAL AS CLEAN TUNNEL AIR

Air Purification System – HV Power Supply Units Test & Commissioning Report			
Contract No.:	HY/2019/13	RISC No.:	032053
Project:	Central Kowloon Route - Buildings, Electrical and Mechanical	Date:	03 APR 2025
Location:	~~TVB~~ / ~~HVB~~ / KVB	Room Name:	Plenum 2
T&C Plan Ref. No:	TB883-TVS-S-6283	Page:	
Ref. Dwg. No.:	TB883-TVS-D-2832		

Part 2: Installation Inspection and Cable Tests for HV DC Cables (2 of 2)

D) Maximum Voltage Withstand Test for HV DC Cable (TCP Section 4.4.3)

Step 1 & 3 - Insulation Resistance Test before and after the Maximum Voltage Withstand Test

From: ESP HV Switch Room 01 / 02 To: APS Plenum No.01 / 02 / 03 Sub-assembly A / B / C / D / E

Items	Circuit No. or Details of Equipment	Cable Length	Insulation Resistance (MΩ) before Step 2	Insulation Resistance (MΩ) after Step 2	Test Result
1	KVB-APS02-HVC-17 Ionizer 1	27.8m	25.1 GΩ	229.0 GΩ	P / F / NA
2	KVB-APS02-HVC-18 Ionizer 2	27.5m	23.7 GΩ	110.0 GΩ	P / F / NA
3	KVB-APS02-HVC-19 Ionizer 3	27.5m	28.2 GΩ	205.0 GΩ	P / F / NA
4	KVB-APS02-HVC-20 Collector	27.2m	30.5 GΩ	165.0 GΩ	P / F / NA

Step 2 - Maximum Voltage Withstand Test

Items	Circuit No. or Details of Equipment	Test Voltage (kV DC)	Duration (Min)	Measured Voltage
1	KVB-APS02-HVC-17 Ionizer 1	20	1	20.3 kV
2	KVB-APS02-HVC-18 Ionizer 2	20	1	20.3 kV
3	KVB-APS02-HVC-19 Ionizer 3	20	1	20.3 kV
4	KVB-APS02-HVC-20 Collector	20	1	20.3 kV

E) List of Testing Equipment / Instruments

Type	Model	Serial No	Calibration Cert. No	Date of Cert.
HV insulation tester	AR3125	6819355	KSZS25021278D001	26/02/2025
HV DC Voltage Meter	HVP-40DM	20240221	ACZ20250303080 2	03/03/2025

Remark: P / F / NA = Pass / Fail / Not Applicable,
The passing criteria for the test is passing the insulation test after for maximum voltage withstand test.
The insulation resistance is over 1000MOhm (*) for HV DC Cable and 30MOhm for ESP Cell

Comment:

Test / Checked By : REW No.: Grade (Name of CTA Representative)	Name: Ho Tu	Signature:	Date: 03 APR 2025
Witnessed By : (Name of JEC Representative)	Name: Tony Ho	Signature:	Date: 03 APR 2025
Witnessed By : (Name of BCL)	Name: Crystal Cheung	Signature:	Date: 03 APR 2025
Witnessed By : (Name of AMASV)	Name: Sam Lai	Signature:	Date: 03/04/2025
Witnessed By : (Name of EMSD)	Name: WONG Cheong Shing CIE/TSC/1	Signature:	Date: - 3 APR 2025
Witnessed By : (Name of)	Name:	Signature:	Date:

Gammon

CIA INTERNATIONAL AS CLEAN TUNNEL AIR

Air Purification System – HV Power Supply Units Test & Commissioning Report			
Contract No.:	HY/2019/13	RISC No.:	32054
Project:	Central Kowloon Route - Buildings, Electrical and Mechanical	Date:	21/03/2025
Location:	~~YVB / HVB~~ / KVB	Room Name:	HV Room 1
T&C Plan Ref. No:	J3883-TVS-S-06283	Page:	
Ref. Dwg. No.:			

Part 3: Inspection and Test for Electrical Installation of ESP Filter (TCP Section 4.5)

Statutory Inspection and Test for LV and HV DC Installation (Sheet 1 of 10)

Items	Description of Inspection	Test Result
A) Visual Inspection (ASD TCP-EE, COP Code 21A/C and COP Appendix 13) - Working Space and Facilities (L.V.)		
a.	Adequacy working space and safe access provided for switch room / electrical facilities.	P / F / NA
b.	Entrance / exit to switch room and/or electrical facilities are free of obstruction.	P / F / NA
c.	Suitable locking facilities provided for switch room and /or electrical facilities.	P / F / NA
d.	Suitable lighting provision provided for switch room and /or electrical facilities.	P / F / NA
e.	Suitable ventilation provision provided for switch room and /or electrical facilities.	P / F / NA
f.	A warning notice 'DANGER — ELECTRICITY, UNAUTHORISED ENTRY PROHIBITED' and '危 險 —— 有電，未經授權不得內進' provided at every entrance of switch room.	P / F / NA
g.	Danger notices, warning notices, schematic diagrams, instructions and similar information are correctly and adequately provided.	P / F / NA
h.	Warning notices for Switch Rooms provided in compliance with EMSD CoP Code 17.	P / F / NA
i.	Warning notices for earthing and main bonding connections provided in compliance with EMSD CoP Code 17.	P / F / NA
j.	All switchgears, distribution boards and electrical equipment properly labelled in compliance with EMSD CoP Code 4D(1).	P / F / NA
k.	Continuity of protective conductors especially the bonding of all exposed conductive parts are satisfactory.	P / F / NA
l.	Logbook provided and work done properly recorded.	P / F / NA
Remark:	P / F / NA = Pass / Fail / Not Applicable	
Comment:		

Test / Checked By : REW No.: Grade (Name of CTA Representative)	Name: Ho Tung	Signature: Ho Tung	Date: 21/03/2025
Witnessed By : (Name of JEC Representative)	Name: CHUNG	Signature:	Date: 21/03/2025
Witnessed By : (Name of GCL)	Name: Raymond Lau	Signature:	Date: 21/03/2025
Witnessed By : AMMJV (Name of)	Name: Eric Tang	Signature:	Date: 21/03/25
Witnessed By : (Name of)	Name:	Signature:	Date:
Witnessed By : (Name of)	Name:	Signature:	Date:

Gammon

CTA INTERNATIONAL AS CLEAN TUNNEL AIR

Air Purification System – HV Power Supply Units Test & Commissioning Report			
Contract No.:	HY/2019/13	RISC No.:	32054
Project:	Central Kowloon Route - Buildings, Electrical and Mechanical	Date:	21/03/2025
Location:	~~YVB / HVB~~ / KVB	Room Name:	HV Room 1
T&C Plan Ref. No:	J3883-TVS-S-06283	Page:	
Ref. Dwg. No.:			

Part 3: Inspection and Test for Electrical Installation of ESP Filter (TCP Section 4.5)

Statutory Inspection and Test for LV and HV DC Installation (Sheet 2 of 10)

Items	Description of Inspection	Test Result
B) Visual Inspection (ASD TCP-EE, COP Code 21A & C and COP Appendix 13) - Distribution Board (L.V.)		
a.	No visible damage to impair safety	P / F / NA
b.	No fuse installed in the neutral circuit.	P / F / NA
c.	All live parts screened with an insulating plate or earthed metal	P / F / NA
d.	All exposed metal parts effectively earthed.	P / F / NA
e.	A warning notice 'DANGER' and '危險' provided on the front panel of every distribution board.	P / F / NA
f.	A notice of periodic testing provided at or near the main distribution board incorporating a residual current device.	P / F / NA
g.	Safe access & adequate clearance space provided in compliance with EMSD CoP Code 4E.	P / F / NA
h.	Distribution boards securely mounted on suitable supports.	P / F / NA
i.	A suitable switch provided to control each distribution board.	P / F / NA
j.	Phase Identification for distribution board provided.	P / F / NA
k.	Check the breaking capacity of MCB / RCBO (6kA) in compliance with EMSD CoP Code 9.	P / F / NA
l.	Circuits connected to MCB / RCBO in accordance with the schematic diagram.	P / F / NA

Remark: P / F / NA = Pass / Fail / Not Applicable

Comment:

Test / Checked By : REW No.: Grade (Name of CTA Representative)	Name: Ho Tung	Signature: Ho Tung	Date: 21/03/2025
Witnessed By : (Name of JEC Representative)	Name: Chung Tg	Signature:	Date: 21/03/2025
Witnessed By : (Name of GCL)	Name: Raymond Lau	Signature:	Date: 21/03/2025
Witnessed By : AMMJV (Name of)	Name: Eric Tang	Signature:	Date: 21/03/25
Witnessed By : (Name of)	Name:	Signature:	Date:
Witnessed By : (Name of)	Name:	Signature:	Date:

Gammon

CIA INTERNATIONAL AS CLEAN TUNNEL AIR

Air Purification System – HV Power Supply Units Test & Commissioning Report			
Contract No.:	HY/2019/13	RISC No.:	32054
Project:	Central Kowloon Route - Buildings, Electrical and Mechanical	Date:	21/03/2025
Location:	~~TVB / HVB /~~ KVB	Room Name:	HV Room 1
T&C Plan Ref. No:	J3883-TVS-S-06283	Page:	
Ref. Dwg. No.:			

Part 3: Inspection and Test for Electrical Installation of ESP Filter (TCP Section 4.5)

Statutory Inspection and Test for LV and HV DC Installation (Sheet 3 of 10)

Items	Description of Inspection	Test Result
C) Visual Inspection (ASD TCP-EE, COP Code 21A & C and COP Appendix 13) - Conductors, Cables and Wirings (L.V.)		
a.	No visible damage to impair safety.	P / F / NA
b.	All live conductors and their methods of insulation, in relation to design currents of circuits and to the operating currents of the protective devices, are properly selected and erected.	P / F / NA
c.	All cables, flexible cords, switches, plugs and socket outlets, accessories and equipment are found to be in good working conditions.	P / F / NA
d.	All conductors are correctly and securely connected and identified.	P / F / NA
e.	Armoured cables properly terminated by proper cable glands.	P / F / NA
f.	Non-sheathed cables protected by conduit, trunking, ducting or approved mechanical protective means.	P / F / NA
g.	Cables and cable containments, such as tray, ladder, ducting, trunking, conduit, etc., adequately supported.	P / F / NA
h.	Suitable cable lugs used for terminating cables, including termination at distribution board.	P / F / NA
i.	Main cables connected up with correct polarity.	P / F / NA
j.	Cables protected against mechanical damage and suitably supported.	P / F / NA
k.	All exposed metal parts including the armour effectively earthed.	P / F / NA
Remark: P / F / NA = Pass / Fail / Not Applicable		
Comment:		

Test / Checked By : REW No.: Grade (Name of CTA Representative)	Name: Ho Tung	Signature: Ho Tung	Date: 21/03/2025
Witnessed By : (Name of JEC Representative)	Name: Chung, Y	Signature:	Date: 21/03/2025
Witnessed By : (Name of GCL)	Name: Raymond Lau	Signature:	Date: 21/03/2025
Witnessed By : AMMJV (Name of)	Name: Eric Tang	Signature:	Date: 21/03/25
Witnessed By : (Name of)	Name:	Signature:	Date:
Witnessed By : (Name of)	Name:	Signature:	Date:

Gammon

CIA INTERNATIONAL AS CLEAN TUNNEL AIR

Air Purification System – HV Power Supply Units Test & Commissioning Report			
Contract No.:	HY/2019/13	RISC No.:	32054
Project:	Central Kowloon Route - Buildings, Electrical and Mechanical	Date:	21/03/2025
Location:	~~YVB / HVB~~ / KVB	Room Name:	HV Room 1
T&C Plan Ref. No:	J3883-TVS-S-06283	Page:	
Ref. Dwg. No.:			

Part 3: Inspection and Test for Electrical Installation of ESP Filter (TCP Section 4.5)

Statutory Inspection and Test for LV and HV DC Installation (Sheet 4 of 10)

Items	Description of Inspection	Test Result
D)	**Visual Inspection (ASD TCP-EE, COP Code 21A and COP Appendix 13) - Final Circuits (L.V.)**	
a.	No visible damage to impair safety	P / F / NA
b.	All non-armoured cables susceptible to damage protected with steel conduit / trunking Bushing and rubber gromment, where necessary, provided.	P / F / NA
c.	Conductor sized to suit the rating of the fuse/ MCB protecting the circuit.	P / F / NA
d.	No cable joint in final circuit.	P / F / NA
e.	All joints of metal conduits or trunking to be mechanically sound, electrically continuous and protected against corrosion.	P / F / NA
f.	All metal conduits, trunking, switch boxes and exposed metal parts effectively earth.	P / F / NA
g.	Earth fault loop impedance and polarities of every outlet checked.	P / F / NA
h.	All fuses and single/double pole switches connected to the phase conductors only with correct polarity.	P / F / NA
i.	Low voltage circuits segregated from extra low voltage circuits.	P / F / NA
j.	Exposed insulated non-sheathed cables with mechanically protected.	P / F / NA
k.	No 2-pin sockets installed. All socket outlets connected with protective conductors and live conductors terminated at correct terminals.	P / F / NA

Remark: P / F / NA = Pass / Fail / Not Applicable

Comment:

Test / Checked By : REW No.: Grade (Name of CTA Representative)	Name: Ho Tung	Signature: Ho Tung	Date: 21/03/2025
Witnessed By : (Name of JEC Representative)	Name: CHUNG	Signature:	Date: 21/03/2025
Witnessed By : (Name of GCL)	Name: Raymond Lau	Signature:	Date: 21/03/2025
Witnessed By : AMMJV (Name of)	Name: Eric Tang	Signature:	Date: 21/03/25
Witnessed By : (Name of)	Name:	Signature:	Date:
Witnessed By : (Name of)	Name:	Signature:	Date:

Gammon

CTA INTERNATIONAL AS CLEAN TUNNEL AIR

Air Purification System – HV Power Supply Units Test & Commissioning Report			
Contract No.:	HY/2019/13	RISC No.:	32054
Project:	Central Kowloon Route - Buildings, Electrical and Mechanical	Date:	21/03/2025
Location:	~~YVB / HVB~~ / KVB	Room Name:	HV Room 1
T&C Plan Ref. No:	J3883-TVS-S-06283	Page:	
Ref. Dwg. No.:			

Part 3: Inspection and Test for Electrical Installation of ESP Filter (TCP Section 4.5)

Statutory Inspection and Test for LV and HV DC Installation (Sheet 5 of 10)

Items	Description of Inspection	Test Result
E)	**Visual Inspection (ASD TCP-EE, COP Code 21A and COP Appendix 13) - Final Circuits (L.V.)**	
l.	Final circuits using 13A socket outlets in compliance with EMSD Code 6E.	P / F / NA
m.	Where circuit protective conductor is formed by the metallic cable containment enclosure, a separate protective conductor between the earthing terminal of socket outlet and its associated metal box being provided.	P / F / NA
n.	Where circuit protective conductor is not formed by the metallic cable containment enclosure, a separate protective conductor to the earthing terminal of socket outlet being provided.	P / F / NA
o.	Residual current device having a rated residual operating current not exceeding 30mA provided for all socket outlets.	P / F / NA
p.	Minimum sizes of protective conductors are provided as per requirement in EMSD COP Code 11 for limitation of protective conductor impedance.	P / F / NA
q.	Means of isolation provided for every fixed appliance.	P / F / NA

Remark: P / F / NA = Pass / Fail / Not Applicable

Comment:

Test / Checked By : REW No.: Grade (Name of CTA Representative)	Name: Ho Tung	Signature: Ho Tung	Date: 21/03/2025
Witnessed By : (Name of JEC Representative)	Name: CHUNG	Signature:	Date: 21/03/2025
Witnessed By : (Name of GCL)	Name: Raymond Lau	Signature:	Date: 21/03/2025
Witnessed By : AMMOV (Name of)	Name: Eric Tang	Signature:	Date: 21/03/25
Witnessed By : (Name of)	Name:	Signature:	Date:
Witnessed By : (Name of)	Name:	Signature:	Date:

Gammon

CTA INTERNATIONAL AS CLEAN TUNNEL AIR

Air Purification System – HV Power Supply Units Test & Commissioning Report			
Contract No.:	HY/2019/13	RISC No.:	32054
Project:	Central Kowloon Route - Buildings, Electrical and Mechanical	Date:	21/03/2025
Location:	~~YVB / HVB~~ / KVB	Room Name:	HV Room 1
T&C Plan Ref. No:	J3883-TVS-S-06283	Page:	
Ref. Dwg. No.:			

Part 3: Inspection and Test for Electrical Installation of ESP Filter (TCP Section 4.5)

Statutory Inspection and Test for LV and HV DC Installation (Sheet 6 of 10)

Items	Description of Inspection	Test Result
F) Visual Inspection (ASD TCP-EE, COP Code 21A&C and COP Appendix 13) - Earthing and Bonding (L.V.)		
a.	No visible damage to impair safety.	P / F / NA
b.	All exposed conductive parts of the wiring installation connected to the earthing terminal with appropriate protective conductor.	P / F / NA
c.	Minimum size of protective conductor used in compliance with EMSD CoP Table 11(1).	P / F / NA
d.	Protective conductor up to and including 6mm2 with green and yellow insulation sheath used throughout its length.	P / F / NA
e.	Copper links provided at joints of metallic trunking, forms part of a protective conductor	P / F / NA
f.	A warning notice 'SAFETY ELECTRICAL CONNECTION—DO NOT REMOVE and '安全接地 終端——切勿移去' provided at all main earthing and bonding connections.	P / F / NA
g.	Supplementary equipotential bonding effectively provided between exposed conductive parts and extraneous conductive parts.	P / F / NA
h.	Exposed conductive parts of fixed equipment installed outside equipotential zone effectively earthed for 0.4 sec. disconnection.	P / F / NA
i.	Exposed conductive parts of fixed equipment installed within equipotential zone effectively earthed for 5 sec. disconnection.	P / F / NA
j.	Effectiveness of the main equipotential bonding connection to the main earthing terminal.	P / F / NA
k.	Earthing conductors of adequate size.	P / F / NA
Remark: P / F / NA = Pass / Fail / Not Applicable		
Comment:		

Test / Checked By : REW No.: Grade (Name of CTA Representative)	Name: Ho Tung	Signature: Ho Tung	Date: 21/03/2025
Witnessed By : (Name of JEC Representative)	Name: Chung Tai	Signature:	Date: 21/03/2025
Witnessed By : (Name of GCL)	Name: Raymond Lau	Signature:	Date: 21/03/2025
Witnessed By : (Name of AMMOV)	Name: Eric Tang	Signature:	Date: 21/03/25
Witnessed By : (Name of)	Name:	Signature:	Date:
Witnessed By : (Name of)	Name:	Signature:	Date:

Gammon

CIA INTERNATIONAL AS

Air Purification System – HV Power Supply Units Test & Commissioning Report			
Contract No.:	HY/2019/13	RISC No.:	32054
Project:	Central Kowloon Route - Buildings, Electrical and Mechanical	Date:	21/03/2025
Location:	~~YVB / HVB~~ / KVB	Room Name:	HV Room 1
T&C Plan Ref. No:	J3883-TVS-S-06283	Page:	
Ref. Dwg. No.:			

Part 3: Inspection and Test for Electrical Installation of ESP Filter (TCP Section 4.5)

Statutory Inspection and Test for LV and HV DC Installation (Sheet 7 of 10)

Items	Description of Inspection	Test Result
G) Conductor Continuity (ASD TCP-EE, COP Code 21B(3) and (4))		
a.	All protective conductors used for equipotential bonding have been tested for continuity.	P / F / NA
b.	All final ring circuit conductors including the protective conductors have been tested for continuity.	P / F / NA
c.	Conductor continuity test results recorded in **relevant Test Form.**	P / F / NA

Remark: P / F / NA = Pass / Fail / Not Applicable

Comment:

Test / Checked By : REW No.: Grade (Name of CTA Representative)	Name: Ho Tung	Signature: Ho Tung	Date: 21/03/2025
Witnessed By : (Name of JEC Representative)	Name: CHUNG Tj	Signature: C	Date: 21/03/2025
Witnessed By : (Name of GCL)	Name: Raymond Lau	Signature:	Date: 21/03/2025
Witnessed By : AMMJV (Name of)	Name: Eric Tang	Signature:	Date: 21/03/25
Witnessed By : (Name of)	Name:	Signature:	Date:
Witnessed By : (Name of)	Name:	Signature:	Date:

Gammon

CIA INTERNATIONAL AS CLEAN TUNNEL AIR

Air Purification System – HV Power Supply Units Test & Commissioning Report			
Contract No.:	HY/2019/13	RISC No.:	32054
Project:	Central Kowloon Route - Buildings, Electrical and Mechanical	Date:	21/03/2025
Location:	~~YVB / HVB /~~ KVB	Room Name:	HV Room 1
T&C Plan Ref. No:	J3883-TVS-S-06283	Page:	
Ref. Dwg. No.:			

Part 3: Inspection and Test for Electrical Installation of ESP Filter (TCP Section 4.5)

Statutory Inspection and Test for LV and HV DC Installation (Sheet 8 of 10)

Items	Description of Inspection	Test Result
H)	**Insulation Resistance (ASD TCP-EE, COP Code 21B(5))**	
a.	The insulation resistance to earth is NOT less than 1 mega ohm.	P / F / NA
b.	The insulation resistance between phase/poles is NOT less than 1 mega ohm.	P / F / NA
c.	The insulation resistance of equipment between the exposed conductive parts and all live parts is NOT less than 1 mega ohm when tested individually and separately (EMSD COP Code 21B(5)(f)).	P / F / NA
d.	Insulation resistance test results recorded in **relevant Test Form.**	P / F / NA

Remark: P / F / NA = Pass / Fail / Not Applicable

Comment:

Test / Checked By : REW No.: Grade (Name of CTA Representative)	Name: Ho Tung	Signature: Ho Tung	Date: 21/03/2025
Witnessed By : (Name of JEC Representative)	Name: Chung	Signature:	Date: 21/03/2025
Witnessed By : (Name of GCL)	Name: Raymond Lau	Signature:	Date: 21/03/2025
Witnessed By : (Name of AMNJV)	Name: Eric Tang	Signature:	Date: 21/03/25
Witnessed By : (Name of)	Name:	Signature:	Date:
Witnessed By : (Name of)	Name:	Signature:	Date:

Gammon

CTA INTERNATIONAL AS CLEAN TUNNEL AIR

Air Purification System – HV Power Supply Units Test & Commissioning Report			
Contract No.:	HY/2019/13	RISC No.:	32054
Project:	Central Kowloon Route - Buildings, Electrical and Mechanical	Date:	21/03/2025
Location:	~~YVB / HVB~~ / KVB	Room Name:	HV Room 1
T&C Plan Ref. No:	J3883-TVS-S-06283	Page:	
Ref. Dwg. No.:			

Part 3: Inspection and Test for Electrical Installation of ESP Filter (TCP Section 4.5)

Statutory Inspection and Test for LV and HV DC Installation (Sheet 9 of 10)

Items	Description of Inspection	Test Result
I) Polarity (ASD TCP-EE, COP Code 21B(6))		
a.	All fuses and single-poles devices are connected in the phase conductors only.	P / F / NA
b.	All wiring has been correctly connected to socket outlets and, etc.	P / F / NA
c.	Polarity Check results recorded in **relevant Test Form.**	P / F / NA

Remark: P / F / NA = Pass / Fail / Not Applicable

Comment:

Test / Checked By : REW No.: Grade (Name of CTA Representative)	Name: Ho Tung	Signature: Ho Tung	Date: 21/03/2025
Witnessed By : (Name of JEC Representative)	Name: CHUNG	Signature:	Date: 21/03/2025
Witnessed By : (Name of GCL)	Name: Raymond Lau	Signature:	Date: 21/03/2025
Witnessed By : (Name of)	Name: Eric Tang	Signature:	Date: 21/03/25
Witnessed By : (Name of)	Name:	Signature:	Date:
Witnessed By : (Name of)	Name:	Signature:	Date:

Gammon

CTA INTERNATIONAL AS CLEAN TUNNEL AIR

Air Purification System – HV Power Supply Units Test & Commissioning Report			
Contract No.:	HY/2019/13	RISC No.:	32054
Project:	Central Kowloon Route - Buildings, Electrical and Mechanical	Date:	21/03/2025
Location:	~~YVB / HVB~~ / KVB	Room Name:	HV Room 1
T&C Plan Ref. No:	J3883-TVS-S-06283	Page:	
Ref. Dwg. No.:			

Part 3: Inspection and Test for Electrical Installation of ESP Filter (TCP Section 4.5)

Statutory Inspection and Test for LV and HV DC Installation (Sheet 10 of 10)

Items	Description of Inspection	Test Result
J) Functional Testing of All Devices Including Protective Devices (ASD TCP-EE, COP Code 21B(9))		
a.	Simulation tests on the operation of devices for earth fault protection are satisfactory.	P / F / NA
b.	50% of the rated tripping current shall not cause the residual current circuit breaker to open.	P / F / NA
c.	100% of the rated tripping current shall cause the residual current circuit breaker to open within 300ms or at any delay time declared by the manufacture of the devices.	P / F / NA
d.	Where the residual current circuit breaker has a rated tripping current not exceeding 30mA and has been installed to reduce the risk associated with direct contact, a residual current of 150mA should cause the circuit breaker to open within 40ms.	P / F / NA
e.	In no event should the test current be applied for a period exceeding one second	P / F / NA
f.	Breakers, moulded case circuit breakers, air circuit breakers, fused switches, switch-fuses and protective relays, etc. are satisfactory.	P / F / NA
g.	Hand operation on all items of equipment such as isolators, switch and protective relays, etc. are satisfactory.	P / F / NA
h.	Hand operation on all items of equipment such as isolators, switches and indicative devices are satisfactory.	P / F / NA
i.	Functional test of all devices including protective devices had been recorded in **relevant Test Form.**	P / F / NA

Remark: P / F / NA = Pass / Fail / Not Applicable

Comment:

Test / Checked By : REW No.: Grade (Name of CTA Representative)	Name: Ho Tung	Signature: Ho Tung	Date: 21/03/2025
Witnessed By : (Name of JEC Representative)	Name: Chung zp	Signature:	Date: 21/03/2025
Witnessed By : (Name of GCL)	Name: Raymond Lau	Signature:	Date: 21/03/2025
Witnessed By : AMTJV (Name of)	Name: Eric Tang	Signature:	Date: 27/03/25
Witnessed By : (Name of)	Name:	Signature:	Date:
Witnessed By : (Name of)	Name:	Signature:	Date:

Gammon

CTA INTERNATIONAL AS

Air Purification System – HV Power Supply Units Test & Commissioning Report			
Contract No.:	HY/2019/13	RISC No.:	31781
Project:	Central Kowloon Route - Buildings, Electrical and Mechanical	Date:	7/4/2025
Location:	~~YVB / HVB~~ / KVB	Room Name:	HV RM 1
T&C Plan Ref. No:	J3883-TVS-S-06283	Page:	
Ref. Dwg. No.:	J3883-TVS-D-02432		

Part 3: Inspection and Test for Electrical Installations (Sheet 2A of 5)

B) Earth Loop Impedance Test (TCP Section 4.5.3)

ESP HV Power Supply Cabinets Information

Cabinets ID:	KVB-APS02-ESP-PSC-01	Main Switch Rating:	80
Location:	ESP HV Switch Room 01 / 02	Supply Fed From:	KVB-DB-ESP02

Circuit No	Details of Equipment	Type of Protective Device	Rating	Earth Loop Impedance (Zs) (Ω)	Test Result
1	KVB-APS02-PSU-01 A Subassembly I1	RCBO	16A SP	0.09	P / F / NA
2	KVB-APS02-PSU-02 A Subassembly I2	RCBO	16A SP	0.1	P / F / NA
3	KVB-APS02-PSU-03 A Subassembly I3	RCBO	16A SP	0.1	P / F / NA
4	KVB-APS02-PSU-04 A Subassembly C	RCBO	16A SP	0.11	P / F / NA
5	KVB-APS02-PSU-05 B Subassembly I1	RCBO	16A SP	0.14	P / F / NA
6	KVB-APS02-PSU-06 B Subassembly I2	RCBO	16A SP	0.11	P / F / NA
7	KVB-APS02-PSU-07 B Subassembly I3	RCBO	16A SP	0.13	P / F / NA
8	KVB-APS02-PSU-08 B Subassembly C	RCBO	16A SP	0.12	P / F / NA
9	KVB-APS02-PSU-09 C Subassembly I1	RCBO	16A SP	0.18	P / F / NA
10	KVB-APS02-PSU-10 C Subassembly I2	RCBO	16A SP	0.14	P / F / NA

Remark: P / F / NA = Pass / Fail / Not Applicable
The Passing Criteria for the Max Earth Fault Loop Independence shall refer to EMSD COP.

Comment:

Test / Checked By : REW No.: Grade (Name of CTA Representative)	Name: Ho Tung	Signature:	Date: 7/4/2025
Witnessed By : (Name of JEC Representative)	Name: Lung Li	Signature:	Date: 7/4/2025
Witnessed By : (Name of GCL)	Name: Raymond Lau	Signature:	Date: 7/4/2025
Witnessed By : (Name of AMMJV)	Name: Sam Lai	Signature:	Date: 7/4/2025
Witnessed By : (Name of EMSD)	Name: WONG Cheong Shing CIE/TSC/1	Signature:	Date: - 7 APR 2025
Witnessed By : (Name of)	Name:	Signature:	Date:

Gammon

CTA INTERNATIONAL AS CLEAN TUNNEL AIR

Air Purification System – HV Power Supply Units Test & Commissioning Report			
Contract No.:	HY/2019/13	RISC No.:	3178 / ml
Project:	Central Kowloon Route - Buildings, Electrical and Mechanical	Date:	7/4/2025
Location:	~~YVB / HVB /~~ KVB	Room Name:	HV Rm 1
T&C Plan Ref. No:	J3883-TVS-S-06283	Page:	
Ref. Dwg. No.:	J3883-TVS-D-02432		

Part 3: Inspection and Test for Electrical Installations (Sheet 2B of 5)

B) Earth Loop Impedance Test (TCP Section 4.5.3)

ESP HV Power Supply Cabinets Information

Cabinets ID:	KVB-APS02-ESP-PSC-02	Main Switch Rating:	80
Location:	ESP HV Switch Room 01 / 02	Supply Fed From:	KVB-DB-ESP02

Circuit No	Details of Equipment	Type of Protective Device	Rating	Earth Loop Impedance (Zs) (Ω)	Test Result
1	KVB-APS02-PSU-11 C Subassembly I3	RCBO	16A SP	0.14	P / F / NA
2	KVB-APS02-PSU-12 C Subassembly C	RCBO	16A SP	0.1	P / F / NA
3	KVB-APS02-PSU-13 D Subassembly I1	RCBO	16A SP	0.11	P / F / NA
4	KVB-APS02-PSU-14 D Subassembly I2	RCBO	16A SP	0.14	P / F / NA
5	KVB-APS02-PSU-15 D Subassembly I3	RCBO	16A SP	0.18	P / F / NA
6	KVB-APS02-PSU-16 D Subassembly C	RCBO	16A SP	0.11	P / F / NA
7	KVB-APS02-PSU-17 E Subassembly I1	RCBO	16A SP	0.13	P / F / NA
8	KVB-APS02-PSU-18 E Subassembly I2	RCBO	16A SP	0.17	P / F / NA
9	KVB-APS02-PSU-19 E Subassembly I3	RCBO	16A SP	0.14	P / F / NA
10	KVB-APS02-PSU-20 E Subassembly C	RCBO	16A SP	0.15	P / F / NA

Remark: P / F / NA = Pass / Fail / Not Applicable
The Passing Criteria for the Max Earth Fault Loop Independence shall refer to EMSD COP.

Comment:

Test / Checked By : REW No.: Grade (Name of CTA Representative)	Name: Ho Tung	Signature:	Date: 7/4/2025
Witnessed By : (Name of JEC Representative)	Name: Lucy Li	Signature:	Date: 7/4/2025
Witnessed By : (Name of GCL)	Name: Raymond Lau	Signature:	Date: 7/4/2025
Witnessed By : (Name of AMMSU)	Name: Sam Lai	Signature:	Date: 7/4/2025
Witnessed By : (Name of EMSD)	Name: WONG Cheong Shing CIE/TSC/1	Signature:	Date: - 7 APR 2025
Witnessed By : (Name of)	Name:	Signature:	Date:

Gammon

CTA INTERNATIONAL AS

Air Purification System – HV Power Supply Units Test & Commissioning Report			
Contract No.:	HY/2019/13	RISC No.:	31781
Project:	Central Kowloon Route - Buildings, Electrical and Mechanical	Date:	7/4/2025
Location:	~~YVB~~ / HVB / KVB	Room Name:	HV RM 1
T&C Plan Ref. No:	J3883-TVS-S-06283	Page:	
Ref. Dwg. No.:	J3883-TVS-D-02432		

Part 3: Inspection and Test for Electrical Installations (Sheet 3 of 5)

C) Functional Test of Residual Current Device (RCD) (TCP Section 4.5.3)

ESP HV Power Supply Cabinets Information

Cabinets ID:	KVB-APS02-ESP-PSC-01	Main Switch Rating:	80A
Location:	ESP HV Switch Room 01 / 02	Supply Fed From:	KVB-DB-ESP02

Circuit No. or Details of Equipment	Type of Protective Device	Rating	Polarity	RCD 50% (ms)	RCD 100% (ms)	Test Result
1	RCBO	16A SP	P / F / NA	P / F / NA	36.8	P / F / NA
2	RCBO	16A SP	P / F / NA	P / F / NA	36.5	P / F / NA
3	RCBO	16A SP	P / F / NA	P / F / NA	27.6	P / F / NA
4	RCBO	16A SP	P / F / NA	P / F / NA	36.6	P / F / NA
5	RCBO	16A SP	P / F / NA	P / F / NA	26.6	P / F / NA
6	RCBO	16A SP	P / F / NA	P / F / NA	27.1	P / F / NA
7	RCBO	16A SP	P / F / NA	P / F / NA	27.2	P / F / NA
8	RCBO	16A SP	P / F / NA	P / F / NA	37.0	P / F / NA
9	RCBO	16A SP	P / F / NA	P / F / NA	36.2	P / F / NA
10	RCBO	16A SP	P / F / NA	P / F / NA	27.3	P / F / NA

Remark: P / F / NA = Pass / Fail / Not Applicable
Tripping time of RCD for 30mA leakage current shall be within 300ms.

Comment:

Test / Checked By : REW No.: Grade (Name of CTA Representative)	Name: Ho Tung	Signature:	Date: 7/4/2025
Witnessed By : (Name of JEC Representative)	Name: Lucy Li	Signature:	Date: 7/4/2025
Witnessed By : (Name of GCL)	Name: Raymond Lau	Signature:	Date: 7/4/2025
Witnessed By : (Name of AMMSV)	Name: Sam Lui	Signature:	Date: 7/4/2025
Witnessed By : (Name of WONG Cheong Shing CIE/TSC/I ZMSD)	Name: WONG Cheong Shing CIE/TSC/I ~~7 APR 2025~~	Signature:	Date: - 7 APR 2025
Witnessed By : (Name of)	Name:	Signature:	Date:

Gammon

CTA INTERNATIONAL AS CLEAN TUNNEL AIR

Air Purification System – HV Power Supply Units Test & Commissioning Report			
Contract No.:	HY/2019/13	RISC No.:	31781 rev
Project:	Central Kowloon Route - Buildings, Electrical and Mechanical	Date:	7/4/2025
Location:	~~YVB / HVB~~ / KVB	Room Name:	HV RM 1
T&C Plan Ref. No:	J3883-TVS-S-06283	Page:	
Ref. Dwg. No.:	J3883-TVS-D-02432		

Part 3: Inspection and Test for Electrical Installations (Sheet 3 of 5)

C) Functional Test of Residual Current Device (RCD) (TCP Section 4.5.3)

ESP HV Power Supply Cabinets Information

Cabinets ID:	KVB-APS02-ESP-PSC-02	Main Switch Rating:	80A
Location:	ESP HV Switch Room 01 / 02	Supply Fed From:	KVB-DB-ESP02

Circuit No. or Details of Equipment	Type of Protective Device	Rating	Polarity	RCD 50% (ms)	RCD 100% (ms)	Test Result
1	RCBO	16A SP	P / F / NA	P / F / NA	36.4	P / F / NA
2	RCBO	16A SP	P / F / NA	P / F / NA	37.6	P / F / NA
3	RCBO	16A SP	P / F / NA	P / F / NA	36.4	P / F / NA
4	RCBO	16A SP	P / F / NA	P / F / NA	26.7	P / F / NA
5	RCBO	16A SP	P / F / NA	P / F / NA	26.5	P / F / NA
6	RCBO	16A SP	P / F / NA	P / F / NA	36.8	P / F / NA
7	RCBO	16A SP	P / F / NA	P / F / NA	37.0	P / F / NA
8	RCBO	16A SP	P / F / NA	P / F / NA	36.4	P / F / NA
9	RCBO	16A SP	P / F / NA	P / F / NA	27.2	P / F / NA
10	RCBO	16A SP	P / F / NA	P / F / NA	26.8	P / F / NA

Remark: P / F / NA = Pass / Fail / Not Applicable
Tripping time of RCD for 30mA leakage current shall be within 300ms.

Comment:

Test / Checked By : REW No.: Grade (Name of CTA Representative)	Name: Ho Tung	Signature:	Date: 7/4/2025
Witnessed By : (Name of JEC Representative)	Name: Ling Li	Signature:	Date: 7/4/2025
Witnessed By : (Name of GCL)	Name: Raymond Law	Signature:	Date: 7/4/2025
Witnessed By : (Name of AMMSV)	Name: Sam Lau	Signature:	Date: 7/4/2025
Witnessed By : (Name of ZMOD)	Name: WONG Cheong Shing CIE/TSC/1	Signature:	Date: - 7 APR 2025
Witnessed By : (Name of)	Name:	Signature:	Date:

Gammon

CTA INTERNATIONAL AS CLEAN TUNNEL AIR

Air Purification System – HV Power Supply Units Test & Commissioning Report			
Contract No.:	HY/2019/13	RISC No.:	31781
Project:	Central Kowloon Route - Buildings, Electrical and Mechanical	Date:	7/4/2025
Location:	~~YVB / HVB~~ / KVB	Room Name:	HV RM 1
T&C Plan Ref. No:	J3883-TVS-S-06283	Page:	
Ref. Dwg. No.:	J3883-TVS-D-02432		

Part 3: Inspection and Test for Electrical Installations (Sheet 4 of 5)

D) Functional Test and Circuitry Check (TCP Section 4.5.3)

ESP HV Power Supply Cabinets Information

Cabinets ID:	KVB-APSR-ESP-PSC-01	Main Switch Rating:	80A
Location:	ESP HV Switch Room 01 / 02	Supply Fed From:	KVB-DB-ESP02

Circuit No. or Details of Equipment	Type of Protective Device	Rating	Isolator	MCB	RCD Test Button	Circuitry Check
1	RCBO	16A SP	P / F / NA	P / F / NA	P / F / NA	P / F / NA
2	RCBO	16A SP	P / F / NA	P / F / NA	P / F / NA	P / F / NA
3	RCBO	16A SP	P / F / NA	P / F / NA	P / F / NA	P / F / NA
4	RCBO	16A SP	P / F / NA	P / F / NA	P / F / NA	P / F / NA
5	RCBO	16A SP	P / F / NA	P / F / NA	P / F / NA	P / F / NA
6	RCBO	16A SP	P / F / NA	P / F / NA	P / F / NA	P / F / NA
7	RCBO	16A SP	P / F / NA	P / F / NA	P / F / NA	P / F / NA
8	RCBO	16A SP	P / F / NA	P / F / NA	P / F / NA	P / F / NA
9	RCBO	16A SP	P / F / NA	P / F / NA	P / F / NA	P / F / NA
10	RCBO	16A SP	P / F / NA	P / F / NA	P / F / NA	P / F / NA
11	RCBO	16A SP	P / F / NA	P / F / NA	P / F / NA	P / F / NA

Remark: P / F / NA = Pass / Fail / Not Applicable

Comment:

Test / Checked By : REW No.: Grade (Name of CTA Representative)	Name: Ho Tung	Signature:	Date: 7/4/2025
Witnessed By : (Name of JEC Representative)	Name: Lucy Li	Signature:	Date: 7/4/2025
Witnessed By : (Name of GCL)	Name: Raymond Lau	Signature:	Date: 7/4/2025
Witnessed By : (Name of AMTSL)	Name: Sam Lai	Signature:	Date: 7/4/2025
Witnessed By : (Name of ZMSD)	Name: WONG Cheong Shing CIE/TSC/1	Signature:	Date: - 7 APR 2025
Witnessed By : (Name of)	Name:	Signature:	Date:

Gammon

CTA INTERNATIONAL AS CLEAN TUNNEL AIR

Air Purification System – HV Power Supply Units Test & Commissioning Report			
Contract No.:	HY/2019/13	RISC No.:	31781
Project:	Central Kowloon Route - Buildings, Electrical and Mechanical	Date:	7/4/2025
Location:	~~YVB~~ / HVB / KVB	Room Name:	HV Rm 1
T&C Plan Ref. No:	J3883-TVS-S-06283	Page:	
Ref. Dwg. No.:	J3883-TVS-D-02432		

Part 3: Inspection and Test for Electrical Installations (Sheet 4 of 5)

D) Functional Test and Circuitry Check (TCP Section 4.5.3)

ESP HV Power Supply Cabinets Information

Cabinets ID:	KVB-APS02-ESP-PSC-02	Main Switch Rating:	80A
Location:	ESP HV Switch Room 01 / 02	Supply Fed From:	KVB-DB-ESP02

Circuit No. or Details of Equipment	Type of Protective Device	Rating	Isolator	MCB	RCD Test Button	Circuitry Check
1	RCBO	16A SP	P / F / NA	P / F / NA	P / F / NA	P / F / NA
2	RCBO	16A SP	P / F / NA	P / F / NA	P / F / NA	P / F / NA
3	RCBO	16A SP	P / F / NA	P / F / NA	P / F / NA	P / F / NA
4	RCBO	16A SP	P / F / NA	P / F / NA	P / F / NA	P / F / NA
5	RCBO	16A SP	P / F / NA	P / F / NA	P / F / NA	P / F / NA
6	RCBO	16A SP	P / F / NA	P / F / NA	P / F / NA	P / F / NA
7	RCBO	16A SP	P / F / NA	P / F / NA	P / F / NA	P / F / NA
8	RCBO	16A SP	P / F / NA	P / F / NA	P / F / NA	P / F / NA
9	RCBO	16A SP	P / F / NA	P / F / NA	P / F / NA	P / F / NA
10	RCBO	16A SP	P / F / NA	P / F / NA	P / F / NA	P / F / NA
11	RCBO	16A SP	P / F / NA	P / F / NA	P / F / NA	P / F / NA

Remark: P / F / NA = Pass / Fail / Not Applicable

Comment:

Test / Checked By : REW No.: Grade (Name of CTA Representative)	Name: HOTus	Signature:	Date: 7/4/2025
Witnessed By : (Name of JEC Representative)	Name: Lucy Li	Signature:	Date: 7/4/2025
Witnessed By : (Name of GCL)	Name: Raymond Lau	Signature:	Date: 7/4/2025
Witnessed By : (Name of AMASU)	Name: Sam Lui	Signature:	Date: 7/4/2025
Witnessed By : (Name of EMSD)	Name: WONG Cheong Shing CIE/TSC/1	Signature:	Date: - 7 APR 2025
Witnessed By : (Name of)	Name:	Signature:	Date:

Gammon

CTA INTERNATIONAL AS

Air Purification System – HV Power Supply Units Test & Commissioning Report			
Contract No.:	HY/2019/13	RISC No.:	3178 / me
Project:	Central Kowloon Route - Buildings, Electrical and Mechanical	Date:	7/4/2025
Location:	~~YVB / HVB~~ / KVB	Room Name:	HV RM 1
T&C Plan Ref. No:	J3883-TVS-S-06283	Page:	
Ref. Dwg. No.:	J3883-TVS-D-02432		

Part 3: Inspection and Test for Electrical Installations (Sheet 2A of 5)

B) Earth Loop Impedance Test (TCP Section 4.5.3)

ESP HV Power Supply Cabinets Information

Cabinets ID:	KVB-APS03-ESP-PSC-01	Main Switch Rating:	80
Location:	ESP HV Switch Room 01 / 02	Supply Fed From:	KVB-DB-ESP02

Circuit No	Details of Equipment	Type of Protective Device	Rating	Earth Loop Impedance (Zs) (Ω)	Test Result
1	KVB-APS03-PSU-01 A Subassembly I1	RCBO	16A SP	0.13	P / F / NA
2	KVB-APS03-PSU-02 A Subassembly I2	RCBO	16A SP	0.13	P / F / NA
3	KVB-APS03-PSU-03 A Subassembly I3	RCBO	16A SP	0.14	P / F / NA
4	KVB-APS03-PSU-04 A Subassembly C	RCBO	16A SP	0.16	P / F / NA
5	KVB-APS03-PSU-05 B Subassembly I1	RCBO	16A SP	0.13	P / F / NA
6	KVB-APS03-PSU-06 B Subassembly I2	RCBO	16A SP	0.16	P / F / NA
7	KVB-APS03-PSU-07 B Subassembly I3	RCBO	16A SP	0.14	P / F / NA
8	KVB-APS03-PSU-08 B Subassembly C	RCBO	16A SP	0.17	P / F / NA
9	KVB-APS03-PSU-09 C Subassembly I1	RCBO	16A SP	0.18	P / F / NA
10	KVB-APS03-PSU-10 C Subassembly I2	RCBO	16A SP	0.17	P / F / NA

Remark: P / F / NA = Pass / Fail / Not Applicable
The Passing Criteria for the Max Earth Fault Loop Independence shall refer to EMSD COP.

Comment:

Test / Checked By : REW No.: Grade (Name of CTA Representative)	Name: Ho Tung	Signature:	Date: 7/4/2025
Witnessed By : (Name of JEC Representative)	Name: Lucy Li	Signature:	Date: 7/4/2025
Witnessed By : (Name of GCL)	Name: Raymond Lau	Signature:	Date: 7/4/2025
Witnessed By : (Name of AMMSV)	Name: Sam Lui	Signature:	Date: 7/4/2025
Witnessed By : (Name of EMSD)	Name: WONG Cheong Shing CIE/TSC/1	Signature:	Date: - 7 APR 2025
Witnessed By : (Name of)	Name:	Signature:	Date:

Gammon

CTA INTERNATIONAL AS

Air Purification System – HV Power Supply Units Test & Commissioning Report			
Contract No.:	HY/2019/13	RISC No.:	31781
Project:	Central Kowloon Route - Buildings, Electrical and Mechanical	Date:	7/4/2025
Location:	~~KVB / HVB~~ KVB	Room Name:	HV Rm 1
T&C Plan Ref. No:	J3883-TVS-S-06283	Page:	
Ref. Dwg. No.:	J3883-TVS-D-02432		

Part 3: Inspection and Test for Electrical Installations (Sheet 2B of 5)

B) Earth Loop Impedance Test (TCP Section 4.5.3)

ESP HV Power Supply Cabinets Information

Cabinets ID:	KVB-APS03-ESP-PSC-02	Main Switch Rating:	80
Location:	ESP HV Switch Room 01 / 02	Supply Fed From:	KVB-DB-ESP02

Circuit No	Details of Equipment	Type of Protective Device	Rating	Earth Loop Impedance (Zs) (Ω)	Test Result
1	KVB-APS03-PSU-11 C Subassembly I3	RCBO	16A SP	0.16	P / F / NA
2	KVB-APS03-PSU-12 C Subassembly C	RCBO	16A SP	0.12	P / F / NA
3	KVB-APS03-PSU-13 D Subassembly I1	RCBO	16A SP	0.14	P / F / NA
4	KVB-APS03-PSU-14 D Subassembly I2	RCBO	16A SP	0.14	P / F / NA
5	KVB-APS03-PSU-15 D Subassembly I3	RCBO	16A SP	0.16	P / F / NA
6	KVB-APS03-PSU-16 D Subassembly C	RCBO	16A SP	0.17	P / F / NA
7	KVB-APS03-PSU-17 E Subassembly I1	RCBO	16A SP	0.15	P / F / NA
8	KVB-APS03-PSU-18 E Subassembly I2	RCBO	16A SP	0.15	P / F / NA
9	KVB-APS03-PSU-19 E Subassembly I3	RCBO	16A SP	0.16	P / F / NA
10	KVB-APS03-PSU-20 E Subassembly C	RCBO	16A SP	0.17	P / F / NA

Remark: P / F / NA = Pass / Fail / Not Applicable
The Passing Criteria for the Max Earth Fault Loop Independence shall refer to EMSD COP.

Comment:

Test / Checked By : REW No.: Grade (Name of CTA Representative)	Name: Ho Tung	Signature:	Date: 7/4/2025
Witnessed By : (Name of JEC Representative)	Name: Lucy Li	Signature:	Date: 7/4/2025
Witnessed By : (Name of GCL)	Name: Raymond Lau	Signature:	Date: 7/4/2025
Witnessed By : (Name of AMMJV)	Name: Sam Lau	Signature:	Date: 7/4/2025
Witnessed By : (Name of EMSD)	Name: WONG Cheong Shing CIE/TSC/1	Signature:	Date: - 7 APR 2025
Witnessed By : (Name of)	Name:	Signature:	Date:

Gammon

CTA INTERNATIONAL AS

Air Purification System – HV Power Supply Units Test & Commissioning Report			
Contract No.:	HY/2019/13	RISC No.:	31781
Project:	Central Kowloon Route - Buildings, Electrical and Mechanical	Date:	7/4/2025
Location:	~~YVB~~ / HVB / KVB	Room Name:	HV RM 1
T&C Plan Ref. No:	J3883-TVS-S-06283	Page:	
Ref. Dwg. No.:	J3883-TVS-D-02432		

Part 3: Inspection and Test for Electrical Installations (Sheet 3 of 5)

C) Functional Test of Residual Current Device (RCD) (TCP Section 4.5.3)

ESP HV Power Supply Cabinets Information

Cabinets ID:	KVB-APS03-ESP-PSC-01	Main Switch Rating:	80A
Location:	ESP HV Switch Room ~~01~~ / 02	Supply Fed From:	KVB-DB-ESP02

Circuit No. or Details of Equipment	Type of Protective Device	Rating	Polarity	RCD 50% (ms)	RCD 100% (ms)	Test Result
1	RCBO	16A SP	P / F / NA	P / F / NA	36.3	P / F / NA
2	RCBO	16A SP	P / F / NA	P / F / NA	36.2	P / F / NA
3	RCBO	16A SP	P / F / NA	P / F / NA	36.1	P / F / NA
4	RCBO	16A SP	P / F / NA	P / F / NA	26.9	P / F / NA
5	RCBO	16A SP	P / F / NA	P / F / NA	36.6	P / F / NA
6	RCBO	16A SP	P / F / NA	P / F / NA	27.1	P / F / NA
7	RCBO	16A SP	P / F / NA	P / F / NA	27.4	P / F / NA
8	RCBO	16A SP	P / F / NA	P / F / NA	36.3	P / F / NA
9	RCBO	16A SP	P / F / NA	P / F / NA	36.2	P / F / NA
10	RCBO	16A SP	P / F / NA	P / F / NA	36.8	P / F / NA

Remark: P / F / NA = Pass / Fail / Not Applicable
Tripping time of RCD for 30mA leakage current shall be within 300ms.

Comment:

Test / Checked By : REW No.: Grade (Name of CTA Representative)	Name: Ho Tung	Signature:	Date: 7/4/2025
Witnessed By : (Name of JEC Representative)	Name: Lucy Li	Signature:	Date: 7/4/2025
Witnessed By : (Name of GCL)	Name: Raymond Lau	Signature:	Date: 7/4/2025
Witnessed By : (Name of AMMSU)	Name: Sam Lai	Signature:	Date: 7/4/2025
Witnessed By : (Name of EMSD)	Name: WONG Cheong Shing CIE/TSC/1	Signature:	Date: - 7 APR 2025
Witnessed By : (Name of)	Name:	Signature:	Date:

Gammon

CTA INTERNATIONAL AS CLEAN TUNNEL AIR

Air Purification System – HV Power Supply Units Test & Commissioning Report			
Contract No.:	HY/2019/13	RISC No.:	31781
Project:	Central Kowloon Route - Buildings, Electrical and Mechanical	Date:	7/4/2025
Location:	~~YVB / HVB~~ / KVB	Room Name:	HV RM 1
T&C Plan Ref. No:	J3883-TVS-S-06283	Page:	
Ref. Dwg. No.:	J3883-TVS-D-02432		

Part 3: Inspection and Test for Electrical Installations (Sheet 3 of 5)

C) Functional Test of Residual Current Device (RCD) (TCP Section 4.5.3)

ESP HV Power Supply Cabinets Information

Cabinets ID:	KVB-APS03-ESP-PSC-02	Main Switch Rating:	80A
Location:	ESP HV Switch Room 01 / 02	Supply Fed From:	KVB-DB-ESP02

Circuit No. or Details of Equipment	Type of Protective Device	Rating	Polarity	RCD 50% (ms)	RCD 100% (ms)	Test Result
1	RCBO	16A SP	P / F / NA	P / F / NA	27.5	P / F / NA
2	RCBO	16A SP	P / F / NA	P / F / NA	37.7	P / F / NA
3	RCBO	16A SP	P / F / NA	P / F / NA	36.7	P / F / NA
4	RCBO	16A SP	P / F / NA	P / F / NA	26.3	P / F / NA
5	RCBO	16A SP	P / F / NA	P / F / NA	27.3	P / F / NA
6	RCBO	16A SP	P / F / NA	P / F / NA	27.1	P / F / NA
7	RCBO	16A SP	P / F / NA	P / F / NA	26.8	P / F / NA
8	RCBO	16A SP	P / F / NA	P / F / NA	37.2	P / F / NA
9	RCBO	16A SP	P / F / NA	P / F / NA	27.0	P / F / NA
10	RCBO	16A SP	P / F / NA	P / F / NA	27.0	P / F / NA

Remark: P / F / NA = Pass / Fail / Not Applicable
Tripping time of RCD for 30mA leakage current shall be within 300ms.

Comment:

Test / Checked By : REW No.: Grade (Name of CTA Representative)	Name: Ho Tung	Signature:	Date: 7/4/2025
Witnessed By : (Name of JEC Representative)	Name: Lucy Li	Signature:	Date: 7/4/2025
Witnessed By : (Name of GCL)	Name: Raymond Law	Signature:	Date: 7/4/2025
Witnessed By : (Name of AMMSE)	Name: Sam Lai	Signature:	Date: 7/4/2025
Witnessed By : (Name of EMSD)	Name: WONG Cheong Shing CIE/TSC/1	Signature:	Date: - 7 APR 2025
Witnessed By : (Name of)	Name:	Signature:	Date:

Gammon

CIA INTERNATIONAL AS CLEAN TUNNEL A/S

Air Purification System – HV Power Supply Units Test & Commissioning Report			
Contract No.:	HY/2019/13	RISC No.:	31781
Project:	Central Kowloon Route - Buildings, Electrical and Mechanical	Date:	7/4/2025
Location:	~~YVB / HVB~~ / KVB	Room Name:	HV RM 1
T&C Plan Ref. No:	J3883-TVS-S-06283	Page:	
Ref. Dwg. No.:	J3883-TVS-D-02432		

Part 3: Inspection and Test for Electrical Installations (Sheet 4 of 5)

D) Functional Test and Circuitry Check (TCP Section 4.5.3)

ESP HV Power Supply Cabinets Information

Cabinets ID:	KVB-APS03-ESP-PSC-01	Main Switch Rating:	80A
Location:	ESP HV Switch Room 01 / 02	Supply Fed From:	KVB-DB-ESP02

Circuit No. or Details of Equipment	Type of Protective Device	Rating	Isolator	MCB	RCD Test Button	Circuitry Check
1	RCBO	16A SP	P / F / NA	P / F / NA	P / F / NA	P / F / NA
2	RCBO	16A SP	P / F / NA	P / F / NA	P / F / NA	P / F / NA
3	RCBO	16A SP	P / F / NA	P / F / NA	P / F / NA	P / F / NA
4	RCBO	16A SP	P / F / NA	P / F / NA	P / F / NA	P / F / NA
5	RCBO	16A SP	P / F / NA	P / F / NA	P / F / NA	P / F / NA
6	RCBO	16A SP	P / F / NA	P / F / NA	P / F / NA	P / F / NA
7	RCBO	16A SP	P / F / NA	P / F / NA	P / F / NA	P / F / NA
8	RCBO	16A SP	P / F / NA	P / F / NA	P / F / NA	P / F / NA
9	RCBO	16A SP	P / F / NA	P / F / NA	P / F / NA	P / F / NA
10	RCBO	16A SP	P / F / NA	P / F / NA	P / F / NA	P / F / NA
11	RCBO	16A SP	P / F / NA	P / F / NA	P / F / NA	P / F / NA

Remark: P / F / NA = Pass / Fail / Not Applicable

Comment:

Test / Checked By : REW No.: Grade (Name of CTA Representative)	Name: Ho Tung	Signature:	Date: 7/4/2025
Witnessed By : (Name of JEC Representative)	Name: Lucy Li	Signature:	Date: 7/4/2025
Witnessed By : (Name of GCL)	Name: Bernard Lau	Signature:	Date: 7/4/2025
Witnessed By : (Name of AMMSL)	Name: Pan Lai	Signature:	Date: 7/4/2025
Witnessed By : (Name of ZMSD)	Name: WONG Cheong Shing CIE/TSC/1	Signature:	Date: - 7 APR 2025
Witnessed By : (Name of)	Name:	Signature:	Date:

Gammon

CTA INTERNATIONAL AS

Air Purification System – HV Power Supply Units Test & Commissioning Report			
Contract No.:	HY/2019/13	RISC No.:	3178
Project:	Central Kowloon Route - Buildings, Electrical and Mechanical	Date:	7/4/2025
Location:	~~YVB / HVB~~ / KVB	Room Name:	HV RM 1
T&C Plan Ref. No:	J3883-TVS-S-06283	Page:	
Ref. Dwg. No.:	J3883-TVS-D-02432		

Part 3: Inspection and Test for Electrical Installations (Sheet 4 of 5)

D) Functional Test and Circuitry Check (TCP Section 4.5.3)

ESP HV Power Supply Cabinets Information

Cabinets ID:	KVB-APS03-ESP-PSC-02	Main Switch Rating:	80A
Location:	ESP HV Switch Room 01 / 02	Supply Fed From:	KVB-DB-ESP02

Circuit No. or Details of Equipment	Type of Protective Device	Rating	Isolator	MCB	RCD Test Button	Circuitry Check
1	RCBO	16A SP	P / F / NA	P / F / NA	P / F / NA	P / F / NA
2	RCBO	16A SP	P / F / NA	P / F / NA	P / F / NA	P / F / NA
3	RCBO	16A SP	P / F / NA	P / F / NA	P / F / NA	P / F / NA
4	RCBO	16A SP	P / F / NA	P / F / NA	P / F / NA	P / F / NA
5	RCBO	16A SP	P / F / NA	P / F / NA	P / F / NA	P / F / NA
6	RCBO	16A SP	P / F / NA	P / F / NA	P / F / NA	P / F / NA
7	RCBO	16A SP	P / F / NA	P / F / NA	P / F / NA	P / F / NA
8	RCBO	16A SP	P / F / NA	P / F / NA	P / F / NA	P / F / NA
9	RCBO	16A SP	P / F / NA	P / F / NA	P / F / NA	P / F / NA
10	RCBO	16A SP	P / F / NA	P / F / NA	P / F / NA	P / F / NA
11	RCBO	16A SP	P / F / NA	P / F / NA	P / F / NA	P / F / NA

Remark: P / F / NA = Pass / Fail / Not Applicable

Comment:

Test / Checked By : REW No.: Grade (Name of CTA Representative)	Name: Ho Tung	Signature:	Date: 7/4/2025
Witnessed By : (Name of JEC Representative)	Name: Lucy Li	Signature:	Date: 7/4/2025
Witnessed By : (Name of GCL)	Name: Raymond Law	Signature:	Date: 7/4/2025
Witnessed By : (Name of AMMJV)	Name: Sam Lau	Signature:	Date: 7/4/2025
Witnessed By : (Name of ZMSD)	Name: WONG Cheong Shing CIE/TSC/1	Signature:	Date: - 7 APR 2025
Witnessed By : (Name of)	Name:	Signature:	Date:

Gammon

CTA INTERNATIONAL AS CLEAN TUNNEL AIR

Air Purification System – HV Power Supply Units Test & Commissioning Report			
Contract No.:	HY/2019/13	RISC No.:	33640
Project:	Central Kowloon Route - Buildings, Electrical and Mechanical	Date:	23/4/2025
Location:	YVB / HVB / KVB	Room Name:	Plenum 2
T&C Plan Ref. No:	J3503-FVS-S-06283	Page:	
Ref. Dwg. No.:			

Part 4 : Functional and Performance Tests for HV Power Supply Units (Sheet 1 of 5)

A) Maximum Voltage Withstand Test for ESP Cell (TCP Section 4.6.1)

From:	ESP HV Switch Room 01 / 02	To:	APS Plenum No.01 / 02 / 03 Sub-assembly A / B / C / D / E

Step 1 & 3 - Insulation Resistance Test before and after the Maximum Voltage Withstand Test

Items	Circuit No. or Details of Equipment	Insulation Resistance (MΩ)	
		Before Max. Withstand Tests	After Max. Withstand Tests
1	(1st Col. Ionizer to Earth)	99.9 (Lower 3 ESP Cell) / 100.5 (Upper 3 ESP Cell)	108 (Lower 3 ESP Cell) / 137 (Upper 3 ESP Cell)
2	(2nd Col. Ionizer to Earth)	325 (Lower 3 ESP Cell) / 318 (Upper 3 ESP Cell)	343 (Lower 3 ESP Cell) / 489 (Upper 3 ESP Cell)
3	(3rd Col. Ionizer to Earth)	227 (Lower 3 ESP Cell) / 229 (Upper 3 ESP Cell)	233 (Lower 3 ESP Cell) / 283 (Upper 3 ESP Cell)
4	(1st to 3rd Col. Collector the Earth)	41 (1st Col.) / 89 (2nd Col.) / 66.7 (3rd Col.)	34.6 (1st Col.) / 100 (2nd Col.) / 73.8 (3rd Col.)

Step 2 - Maximum Voltage Withstand Test

Items	Test Voltage (kV DC)	Duration (min)	Measured Voltage (kV DC)	Test Result
1	20 (Ionizer)	1	20.1 / 19.9	P / F / NA
2	20 (Ionizer)		20.3 / 19.8	P / F / NA
3	20 (Ionizer)		20.1 / 19.8	P / F / NA
4	8 (Collector)	1	7.5	P / F / NA

B) List of Testing Equipment / Instruments

Type	Model	Serial No	Calibration Cert. No	Date of Cert.
HV insulation tester	AR3125	6819355	KS252502128000 1	25/02/2025
HV DC Voltage Meter	HVP-40DM	20240221	AC2202503030802	03/03/2025

Remark: P / F / NA = Pass / Fail / Not Applicable
The passing criteria for the test is passing the insulation test after for maximum voltage withstand test.
The insulation resistance is over 1000MOhm (*) for HV DC Cable and 30MOhm for ESP Cell

Comment:

Test / Checked By : REW No.: Grade (Name of CTA Representative)	Name: Ho Tung	Signature:	Date: 23/04/2025
Witnessed By : (Name of JEC Representative)	Name: John Chan	Signature:	Date: 23/4/2025
Witnessed By : (Name of GCL)	Name: Raymond Lau	Signature:	Date: 23/4/2025
Witnessed By : (Name of AMMJV)	Name: Sam Lai	Signature:	Date: 23/4/2025
Witnessed By : (Name of ZHSD)	Name: WONG Cheong Shing CIE/TSC/1	Signature:	Date: 23 APR 2025
Witnessed By : (Name of)	Name:	Signature:	Date:

Gammon

CTA INTERNATIONAL AS

Air Purification System – HV Power Supply Units Test & Commissioning Report			
Contract No.:	HY/2019/13	RISC No.:	33640
Project:	Central Kowloon Route - Buildings, Electrical and Mechanical	Date:	23/4/2025
Location:	YVB / HVB / KVB	Room Name:	Plenum 2
T&C Plan Ref. No:	I3883-TVS-S-06283	Page:	
Ref. Dwg. No.:			

Part 4 : Functional and Performance Tests for HV Power Supply Units (Sheet 1 of 5)

A) Maximum Voltage Withstand Test for ESP Cell (TCP Section 4.6.1)

From:	ESP HV Switch Room 01 / 02	To:	APS Plenum No.01 / 02 / 03 Sub-assembly A / B / C / D / E

Step 1 & 3 - Insulation Resistance Test before and after the Maximum Voltage Withstand Test

Items	Circuit No. or Details of Equipment	Insulation Resistance (MΩ)	
		Before Max. Withstand Tests	After Max. Withstand Tests
1	(1st Col. Ionizer to Earth)	313 (Lower 3 ESP Cell) / 448 (Upper 3 ESP Cell)	443 (Lower 3 ESP Cell) / 528 (Upper 3 ESP Cell)
2	(2nd Col. Ionizer to Earth)	338 (Lower 3 ESP Cell) / 288 (Upper 3 ESP Cell)	362 (Lower 3 ESP Cell) / 400 (Upper 3 ESP Cell)
3	(3rd Col. Ionizer to Earth)	246 (Lower 3 ESP Cell) / 406 (Upper 3 ESP Cell)	285 (Lower 3 ESP Cell) / 616 (Upper 3 ESP Cell)
4	(1st to 3rd Col. Collector the Earth)	157 (1st Col.) / 136 (2nd Col.) / 35.6 (3rd Col.)	159 (1st Col.) / 252 (2nd Col.) / 66.5 (3rd Col.)

Step 2 - Maximum Voltage Withstand Test

Items	Test Voltage (kV DC)	Duration (min)	Measured Voltage (kV DC)	Test Result
1	20 (Ionizer)	1	20 / 19.9	P / F / NA
2	20 (Ionizer)		20.1 / 19.9	P / F / NA
3	20 (Ionizer)		20.1 / 19.7	P / F / NA
4	8 (Collector)	1	7.6	P / F / NA

B) List of Testing Equipment / Instruments

Type	Model	Serial No	Calibration Cert. No	Date of Cert.
HV insulation tester	AR3125	6819355	KS2525021278D001	25/02/2025
HV DC Voltage Meter	HVP-40DM	20240221	AC220250303080 2	03/03/2025

Remark: P / F / NA = Pass / Fail / Not Applicable
The passing criteria for the test is passing the insulation test after for maximum voltage withstand test.
The insulation resistance is over 1000MOhm (*) for HV DC Cable and 30MOhm for ESP Cell

Comment:

	Name:	Signature:	Date:
Test / Checked By : REW No.: Grade (Name of CTA Representative)	Ho Tung		23/4/2025
Witnessed By : (Name of JEC Representative)	John Chan		23/4/2025
Witnessed By : (Name of GCL)	Raymond Lau		23/4/2025
Witnessed By : (Name of AMMJV)	Sam Lui		23/4/2025
Witnessed By : (Name of ZMSD)	WONG Cheong Shing CIE/TSC/1		23 APR 2025
Witnessed By : (Name of)			

Gammon

CTA INTERNATIONAL AS CLEAN TUNNEL AIR

Air Purification System – HV Power Supply Units Test & Commissioning Report			
Contract No.:	HY/2019/13	RISC No.:	33640
Project:	Central Kowloon Route - Buildings, Electrical and Mechanical	Date:	23/4/2025
Location:	YVB / HVB / KVB	Room Name:	Plenum 2
T&C Plan Ref. No:	33883-TVS-S-06283	Page:	
Ref. Dwg. No.:			

Part 4 : Functional and Performance Tests for HV Power Supply Units (Sheet 1 of 5)

A) Maximum Voltage Withstand Test for ESP Cell (TCP Section 4.6.1)

From:	ESP HV Switch Room 01 / 02	To:	APS Plenum No.01 / 02 / 03 Sub-assembly A / B / C / D / E

Step 1 & 3 - Insulation Resistance Test before and after the Maximum Voltage Withstand Test

Items	Circuit No. or Details of Equipment	Insulation Resistance (MΩ)	
		Before Max. Withstand Tests	After Max. Withstand Tests
1	(1st Col. Ionizer to Earth)	284 (Lower 3 ESP Cell) / 1.16G (Upper 3 ESP Cell)	301 (Lower 3 ESP Cell) / 345 (Upper 3 ESP Cell)
2	(2nd Col. Ionizer to Earth)	427 (Lower 3 ESP Cell) / 35.2G (Upper 3 ESP Cell)	561 (Lower 3 ESP Cell) / 454 (Upper 3 ESP Cell)
3	(3rd Col. Ionizer to Earth)	3.71G (Lower 3 ESP Cell) / 2.64G (Upper 3 ESP Cell)	387 (Lower 3 ESP Cell) / 563 (Upper 3 ESP Cell)
4	(1st to 3rd Col. Collector the Earth)	106 (1st Col.) / 62 (2nd Col.) / 63 (3rd Col.)	136 (1st Col.) / 77.9 (2nd Col.) / 66.4 (3rd Col.)

Step 2 - Maximum Voltage Withstand Test

Items	Test Voltage (kV DC)	Duration (min)	Measured Voltage (kV DC)	Test Result
1	20 (Ionizer)	1	19.7 / 19.7	P / F / NA
2	20 (Ionizer)		20.2 / 19.9	P / F / NA
3	20 (Ionizer)		20 / 19.7	P / F / NA
4	8 (Collector)	1	7.6	P / F / NA

B) List of Testing Equipment / Instruments

Type	Model	Serial No	Calibration Cert. No	Date of Cert.
HV insulation tester	AR3125	6819355	KS2525021278D001	25/02/2025
HV DC Voltage Meter	HVP-40DM	20240221	AC220250303 0802	03/03/2025

Remark: P / F / NA = Pass / Fail / Not Applicable
The passing criteria for the test is passing the insulation test after for maximum voltage withstand test.
The insulation resistance is over 1000MOhm (*) for HV DC Cable and 30MOhm for ESP Cell

Comment:

Test / Checked By : REW No.: Grade (Name of CTA Representative)	Name: Ho Tung	Signature:	Date: 23/4/2025
Witnessed By : (Name of JEC Representative)	Name: John Chan	Signature:	Date: 23/4/2025
Witnessed By : (Name of GCL)	Name: Raymond Lau	Signature:	Date: 23/4/2025
Witnessed By : (Name of Samil)	Name: Sam Lai	Signature:	Date: 23/4/2025
Witnessed By : (Name of ZMSD)	Name: WONG Cheong Shing CIE/TSC/1	Signature:	Date: 23 APR 2025
Witnessed By : (Name of)	Name:	Signature:	Date:

Gammon

CIA INTERNATIONAL AS CLEAN TUNNEL AIR

Air Purification System – HV Power Supply Units Test & Commissioning Report			
Contract No.:	HY/2019/13	RISC No.:	33640
Project:	Central Kowloon Route - Buildings, Electrical and Mechanical	Date:	23/4/2025
Location:	YVB / HVB / KVB	Room Name:	Plenum 2
T&C Plan Ref. No:	J3883-PVS-S-06283	Page:	
Ref. Dwg. No.:			

Part 4 : Functional and Performance Tests for HV Power Supply Units (Sheet 1 of 5)

A) Maximum Voltage Withstand Test for ESP Cell (TCP Section 4.6.1)

From:	ESP HV Switch Room 01 / 02	To:	APS Plenum No.01 / 02 / 03 Sub-assembly A / B / C / D / E

Step 1 & 3 - Insulation Resistance Test before and after the Maximum Voltage Withstand Test

Items	Circuit No. or Details of Equipment	Insulation Resistance (MΩ)	
		Before Max. Withstand Tests	After Max. Withstand Tests
1	(1st Col. Ionizer to Earth)	1.76G (Lower 3 ESP Cell) / 427 (Upper 3 ESP Cell)	367 (Lower 3 ESP Cell) / 532 (Upper 3 ESP Cell)
2	(2nd Col. Ionizer to Earth)	6.27G (Lower 3 ESP Cell) / 212 (Upper 3 ESP Cell)	1.63G (Lower 3 ESP Cell) / 249 (Upper 3 ESP Cell)
3	(3rd Col. Ionizer to Earth)	266 (Lower 3 ESP Cell) / 183 (Upper 3 ESP Cell)	253 (Lower 3 ESP Cell) / 239 (Upper 3 ESP Cell)
4	(1st to 3rd Col. Collector the Earth)	66.5 (1st Col.) / 230 (2nd Col.) / 70.9 (3rd Col.)	100.5 (1st Col.) / 306 (2nd Col.) / 191.8 (3rd Col.)

Step 2 - Maximum Voltage Withstand Test

Items	Test Voltage (kV DC)	Duration (min)	Measured Voltage (kV DC)	Test Result
1	20 (Ionizer)	1	20.2 / 19.9	P / F / NA
2	20 (Ionizer)		20.3 / 19.6	P / F / NA
3	20 (Ionizer)		20 / 19.8	P / F / NA
4	8 (Collector)	1	7.6	P / F / NA

B) List of Testing Equipment / Instruments

Type	Model	Serial No	Calibration Cert. No	Date of Cert.
HV insulation tester	AR3125	6819355	KS2525021278D001	25/02/2025
HV DC Voltage Meter	HVP-40DM	20240221	AC220250303080 2	03/03/2025

Remark: P / F / NA = Pass / Fail / Not Applicable
The passing criteria for the test is passing the insulation test after for maximum voltage withstand test.
The insulation resistance is over 1000MOhm (*) for HV DC Cable and 30MOhm for ESP Cell

Comment:

Test / Checked By : REW No.: Grade (Name of CTA Representative)	Name: Ho Tung	Signature:	Date: 23/4/2025
Witnessed By : (Name of JEC Representative)	Name: John Chan	Signature:	Date: 23/4/2025
Witnessed By : (Name of GCL)	Name: Raymond Lau	Signature:	Date: 23/4/2025
Witnessed By : (Name of AMMSV)	Name: Sam Lai	Signature:	Date: 23/4/2025
Witnessed By : (Name of ZHSD)	Name: WONG Cheong Shing CIE/TSC/1	Signature:	Date: 23 APR 2025
Witnessed By : (Name of)	Name:	Signature:	Date:

Gammon

CTA INTERNATIONAL AS CLEAN TUNNEL AIR

Air Purification System – HV Power Supply Units Test & Commissioning Report			
Contract No.:	HY/2019/13	RISC No.:	33640
Project:	Central Kowloon Route - Buildings, Electrical and Mechanical	Date:	23/4/2025
Location:	YVB / HVB / KVB	Room Name:	Plenum 2
T&C Plan Ref. No:	J3883-TVS-S-06283	Page:	
Ref. Dwg. No.:			

Part 4 : Functional and Performance Tests for HV Power Supply Units (Sheet 1 of 5)

A) Maximum Voltage Withstand Test for ESP Cell (TCP Section 4.6.1)

From:	ESP HV Switch Room 01 / 02	To:	APS Plenum No.01 / 02 / 03 Sub-assembly A / B / C / D / E

Step 1 & 3 - Insulation Resistance Test before and after the Maximum Voltage Withstand Test

Items	Circuit No. or Details of Equipment	Insulation Resistance (MΩ)	
		Before Max. Withstand Tests	After Max. Withstand Tests
1	(1st Col. Ionizer to Earth)	339 (Lower 3 ESP Cell) / 248 (Upper 3 ESP Cell)	360 (Lower 3 ESP Cell) / 318 (Upper 3 ESP Cell)
2	(2nd Col. Ionizer to Earth)	307 (Lower 3 ESP Cell) / 351 (Upper 3 ESP Cell)	313 (Lower 3 ESP Cell) / 433 (Upper 3 ESP Cell)
3	(3rd Col. Ionizer to Earth)	232 (Lower 3 ESP Cell) / 318 (Upper 3 ESP Cell)	234 (Lower 3 ESP Cell) / 791 (Upper 3 ESP Cell)
4	(1st to 3rd Col. Collector the Earth)	71.9 (1st Col.) / 73.3 (2nd Col.) / 66.5 (3rd Col.)	97.1 (1st Col.) / 91.6 (2nd Col.) / 116 (3rd Col.)

Step 2 - Maximum Voltage Withstand Test

Items	Test Voltage (kV DC)	Duration (min)	Measured Voltage (kV DC)	Test Result
1	20 (Ionizer)	1	20.1 / 19.8	P / F / NA
2	20 (Ionizer)		20.1 / 19.6	P / F / NA
3	20 (Ionizer)		20.1 / 19.9	P / F / NA
4	8 (Collector)	1	7.5	P / F / NA

B) List of Testing Equipment / Instruments

Type	Model	Serial No	Calibration Cert. No	Date of Cert.
HV insulation tester	AR3125	6819355	KS2525021278D001	25/02/2025
HV DC Voltage tester	HVP-40DM	20240221	AC2202503030802	03/03/2025

Remark: P / F / NA = Pass / Fail / Not Applicable
The passing criteria for the test is passing the insulation test after for maximum voltage withstand test.
The insulation resistance is over 1000MOhm (*) for HV DC Cable and 30MOhm for ESP Cell

Comment:

Test / Checked By : REW No.: Grade (Name of CTA Representative)	Name: Ho Tung	Signature:	Date: 23/04/2025
Witnessed By : (Name of JEC Representative)	Name: John Chan	Signature:	Date: 23/4/2025
Witnessed By : (Name of GCL)	Name: Raymond Lau	Signature:	Date: 23/04/2025
Witnessed By : (Name of AMMSU)	Name: Sam Lai	Signature:	Date: 23/04/2025
Witnessed By : (Name of ZMSD)	Name: WONG Cheong Shing CIE/TSC/1	Signature:	Date: 23 APR 2025
Witnessed By : (Name of)	Name:	Signature:	Date:

Gammon

CTA INTERNATIONAL AS CLEAN TUNNEL AIR

Air Purification System – HV Power Supply Units Test & Commissioning Report			
Contract No.:	HY/2019/13	RISC No.:	33640
Project:	Central Kowloon Route - Buildings, Electrical and Mechanical	Date:	23/4/2025
Location:	YVB / HVB / KVB	Room Name:	Plenum 2
T&C Plan Ref. No:	J3503-FVS-S-06283	Page:	
Ref. Dwg. No.:			

Part 4 : Functional and Performance Tests for HV Power Supply Units (Sheet 1 of 5)

A) Maximum Voltage Withstand Test for ESP Cell (TCP Section 4.6.1)

From:	ESP HV Switch Room 01 / 02	To:	APS Plenum No.01 / 02 / 03 Sub-assembly A / B / C / D / E

Step 1 & 3 - Insulation Resistance Test before and after the Maximum Voltage Withstand Test

Items	Circuit No. or Details of Equipment	Insulation Resistance (MΩ)	
		Before Max. Withstand Tests	After Max. Withstand Tests
1	(1st Col. Ionizer to Earth)	99.9 (Lower 3 ESP Cell) / 100.5 (Upper 3 ESP Cell)	108 (Lower 3 ESP Cell) / 137 (Upper 3 ESP Cell)
2	(2nd Col. Ionizer to Earth)	325 (Lower 3 ESP Cell) / 318 (Upper 3 ESP Cell)	343 (Lower 3 ESP Cell) / 489 (Upper 3 ESP Cell)
3	(3rd Col. Ionizer to Earth)	227 (Lower 3 ESP Cell) / 229 (Upper 3 ESP Cell)	233 (Lower 3 ESP Cell) / 283 (Upper 3 ESP Cell)
4	(1st to 3rd Col. Collector the Earth)	41 (1st Col.) / 89 (2nd Col.) / 66.7 (3rd Col.)	34.6 (1st Col.) / 100 (2nd Col.) / 73.8 (3rd Col.)

Step 2 - Maximum Voltage Withstand Test

Items	Test Voltage (kV DC)	Duration (min)	Measured Voltage (kV DC)	Test Result
1	20 (Ionizer)	1	20.1 / 19.9	P / F / NA
2	20 (Ionizer)		20.3 / 19.8	P / F / NA
3	20 (Ionizer)		20.1 / 19.8	P / F / NA
4	8 (Collector)	1	7.5	P / F / NA

B) List of Testing Equipment / Instruments

Type	Model	Serial No	Calibration Cert. No	Date of Cert.
HV insulation tester	AR3125	6819355	KS252502128000 1	25/02/2025
HV DC Voltage Meter	HVP-40DM	20240221	AC2202503030802	03/03/2025

Remark: P / F / NA = Pass / Fail / Not Applicable
The passing criteria for the test is passing the insulation test after for maximum voltage withstand test.
The insulation resistance is over 1000MOhm (*) for HV DC Cable and 30MOhm for ESP Cell

Comment:

Test / Checked By : REW No.: Grade (Name of CTA Representative)	Name: Ho Tung	Signature:	Date: 23/04/2025
Witnessed By : (Name of JEC Representative)	Name: John Chan	Signature:	Date: 23/4/2025
Witnessed By : (Name of GCL)	Name: Raymond Lau	Signature:	Date: 23/4/2025
Witnessed By : (Name of AMMJV)	Name: Sam Lai	Signature:	Date: 23/4/2025
Witnessed By : (Name of ZHSD)	Name: WONG Cheong Shing CIE/TSC/1	Signature:	Date: 23 APR 2025
Witnessed By : (Name of)	Name:	Signature:	Date:

Gammon

CTA INTERNATIONAL AS

Air Purification System – HV Power Supply Units Test & Commissioning Report			
Contract No.:	HY/2019/13	RISC No.:	33640
Project:	Central Kowloon Route - Buildings, Electrical and Mechanical	Date:	23/4/2025
Location:	YVB / HVB / KVB	Room Name:	Plenum 2
T&C Plan Ref. No:	I3883-TVS-S-06283	Page:	
Ref. Dwg. No.:			

Part 4 : Functional and Performance Tests for HV Power Supply Units (Sheet 1 of 5)

A) Maximum Voltage Withstand Test for ESP Cell (TCP Section 4.6.1)

From:	ESP HV Switch Room 01 / 02	To:	APS Plenum No.01 / 02 / 03 Sub-assembly A / B / C / D / E

Step 1 & 3 - Insulation Resistance Test before and after the Maximum Voltage Withstand Test

Items	Circuit No. or Details of Equipment	Insulation Resistance (MΩ)	
		Before Max. Withstand Tests	After Max. Withstand Tests
1	(1st Col. Ionizer to Earth)	313 (Lower 3 ESP Cell) / 448 (Upper 3 ESP Cell)	443 (Lower 3 ESP Cell) / 528 (Upper 3 ESP Cell)
2	(2nd Col. Ionizer to Earth)	338 (Lower 3 ESP Cell) / 288 (Upper 3 ESP Cell)	362 (Lower 3 ESP Cell) / 400 (Upper 3 ESP Cell)
3	(3rd Col. Ionizer to Earth)	246 (Lower 3 ESP Cell) / 406 (Upper 3 ESP Cell)	285 (Lower 3 ESP Cell) / 616 (Upper 3 ESP Cell)
4	(1st to 3rd Col. Collector the Earth)	157 (1st Col.) / 136 (2nd Col.) / 35.6 (3rd Col.)	159 (1st Col.) / 252 (2nd Col.) / 66.5 (3rd Col.)

Step 2 - Maximum Voltage Withstand Test

Items	Test Voltage (kV DC)	Duration (min)	Measured Voltage (kV DC)	Test Result
1	20 (Ionizer)	1	20 / 19.9	P / F / NA
2	20 (Ionizer)		20.1 / 19.9	P / F / NA
3	20 (Ionizer)		20.1 / 19.7	P / F / NA
4	8 (Collector)	1	7.6	P / F / NA

B) List of Testing Equipment / Instruments

Type	Model	Serial No	Calibration Cert. No	Date of Cert.
HV insulation tester	AR3125	6819355	KS2525021278D001	25/02/2025
HV DC Voltage Meter	HVP-40DM	20240221	AC220250303080 2	03/03/2025

Remark: P / F / NA = Pass / Fail / Not Applicable
The passing criteria for the test is passing the insulation test after for maximum voltage withstand test.
The insulation resistance is over 1000MOhm (*) for HV DC Cable and 30MOhm for ESP Cell

Comment:

	Name:	Signature:	Date:
Test / Checked By : REW No.: Grade (Name of CTA Representative)	Ho Tung		23/4/2025
Witnessed By : (Name of JEC Representative)	John Chan		23/4/2025
Witnessed By : (Name of GCL)	Raymond Lau		23/4/2025
Witnessed By : (Name of AMMJV)	Sam Lui		23/4/2025
Witnessed By : (Name of ZMSD)	WONG Cheong Shing CIE/TSC/1		23 APR 2025
Witnessed By : (Name of)			

Gammon

CTA INTERNATIONAL AS CLEAN TUNNEL AIR

Air Purification System – HV Power Supply Units Test & Commissioning Report			
Contract No.:	HY/2019/13	RISC No.:	33640
Project:	Central Kowloon Route - Buildings, Electrical and Mechanical	Date:	23/4/2025
Location:	YVB / HVB / KVB	Room Name:	Plenum 2
T&C Plan Ref. No:	33883-TVS-S-06283	Page:	
Ref. Dwg. No.:			

Part 4 : Functional and Performance Tests for HV Power Supply Units (Sheet 1 of 5)

A) Maximum Voltage Withstand Test for ESP Cell (TCP Section 4.6.1)

From:	ESP HV Switch Room 01 / 02	To:	APS Plenum No.01 / 02 / 03 Sub-assembly A / B / C / D / E

Step 1 & 3 - Insulation Resistance Test before and after the Maximum Voltage Withstand Test

Items	Circuit No. or Details of Equipment	Insulation Resistance (MΩ)	
		Before Max. Withstand Tests	After Max. Withstand Tests
1	(1st Col. Ionizer to Earth)	284 (Lower 3 ESP Cell) / 1.16G (Upper 3 ESP Cell)	301 (Lower 3 ESP Cell) / 345 (Upper 3 ESP Cell)
2	(2nd Col. Ionizer to Earth)	427 (Lower 3 ESP Cell) / 35.2G (Upper 3 ESP Cell)	561 (Lower 3 ESP Cell) / 454 (Upper 3 ESP Cell)
3	(3rd Col. Ionizer to Earth)	3.71G (Lower 3 ESP Cell) / 2.64G (Upper 3 ESP Cell)	387 (Lower 3 ESP Cell) / 563 (Upper 3 ESP Cell)
4	(1st to 3rd Col. Collector the Earth)	106 (1st Col.) / 62 (2nd Col.) / 63 (3rd Col.)	136 (1st Col.) / 77.9 (2nd Col.) / 66.4 (3rd Col.)

Step 2 - Maximum Voltage Withstand Test

Items	Test Voltage (kV DC)	Duration (min)	Measured Voltage (kV DC)	Test Result
1	20 (Ionizer)	1	19.7 / 19.7	P / F / NA
2	20 (Ionizer)		20.2 / 19.9	P / F / NA
3	20 (Ionizer)		20 / 19.7	P / F / NA
4	8 (Collector)	1	7.6	P / F / NA

B) List of Testing Equipment / Instruments

Type	Model	Serial No	Calibration Cert. No	Date of Cert.
HV insulation tester	AR3125	6819355	KS2525021278D001	25/02/2025
HV DC Voltage Meter	HVP-40DM	20240221	AC220250303 0802	03/03/2025

Remark: P / F / NA = Pass / Fail / Not Applicable
The passing criteria for the test is passing the insulation test after for maximum voltage withstand test.
The insulation resistance is over 1000MOhm (*) for HV DC Cable and 30MOhm for ESP Cell

Comment:

Test / Checked By : REW No.: Grade (Name of CTA Representative)	Name: Ho Tung	Signature:	Date: 23/4/2025
Witnessed By : (Name of JEC Representative)	Name: John Chan	Signature:	Date: 23/4/2025
Witnessed By : (Name of GCL)	Name: Raymond Lau	Signature:	Date: 23/4/2025
Witnessed By : (Name of Samil)	Name: Sam Lai	Signature:	Date: 23/4/2025
Witnessed By : (Name of ZMSD)	Name: WONG Cheong Shing CIE/TSC/1	Signature:	Date: 23 APR 2025
Witnessed By : (Name of)	Name:	Signature:	Date:

Gammon

CIA INTERNATIONAL AS CLEAN TUNNEL AIR

Air Purification System – HV Power Supply Units Test & Commissioning Report			
Contract No.:	HY/2019/13	RISC No.:	33640
Project:	Central Kowloon Route - Buildings, Electrical and Mechanical	Date:	23/4/2025
Location:	YVB / HVB / KVB	Room Name:	Plenum 2
T&C Plan Ref. No:	J3883-PVS-S-06283	Page:	
Ref. Dwg. No.:			

Part 4 : Functional and Performance Tests for HV Power Supply Units (Sheet 1 of 5)

A) Maximum Voltage Withstand Test for ESP Cell (TCP Section 4.6.1)

From:	ESP HV Switch Room 01 / 02	To:	APS Plenum No.01 / 02 / 03 Sub-assembly A / B / C / D / E

Step 1 & 3 - Insulation Resistance Test before and after the Maximum Voltage Withstand Test

Items	Circuit No. or Details of Equipment	Insulation Resistance (MΩ)	
		Before Max. Withstand Tests	After Max. Withstand Tests
1	(1st Col. Ionizer to Earth)	1.76G (Lower 3 ESP Cell) / 427 (Upper 3 ESP Cell)	367 (Lower 3 ESP Cell) / 532 (Upper 3 ESP Cell)
2	(2nd Col. Ionizer to Earth)	6.27G (Lower 3 ESP Cell) / 212 (Upper 3 ESP Cell)	1.63G (Lower 3 ESP Cell) / 249 (Upper 3 ESP Cell)
3	(3rd Col. Ionizer to Earth)	266 (Lower 3 ESP Cell) / 183 (Upper 3 ESP Cell)	253 (Lower 3 ESP Cell) / 239 (Upper 3 ESP Cell)
4	(1st to 3rd Col. Collector the Earth)	66.5 (1st Col.) / 230 (2nd Col.) / 70.9 (3rd Col.)	100.5 (1st Col.) / 306 (2nd Col.) / 191.8 (3rd Col.)

Step 2 - Maximum Voltage Withstand Test

Items	Test Voltage (kV DC)	Duration (min)	Measured Voltage (kV DC)	Test Result
1	20 (Ionizer)	1	20.2 / 19.9	P / F / NA
2	20 (Ionizer)		20.3 / 19.6	P / F / NA
3	20 (Ionizer)		20 / 19.8	P / F / NA
4	8 (Collector)	1	7.6	P / F / NA

B) List of Testing Equipment / Instruments

Type	Model	Serial No	Calibration Cert. No	Date of Cert.
HV insulation tester	AR3125	6819355	KS2525021278D001	25/02/2025
HV DC Voltage Meter	HVP-40DM	20240221	AC220250303080 2	03/03/2025

Remark: P / F / NA = Pass / Fail / Not Applicable
The passing criteria for the test is passing the insulation test after for maximum voltage withstand test.
The insulation resistance is over 1000MOhm (*) for HV DC Cable and 30MOhm for ESP Cell

Comment:

Test / Checked By : REW No.: Grade (Name of CTA Representative)	Name: Ho Tung	Signature:	Date: 23/4/2025
Witnessed By : (Name of JEC Representative)	Name: John Chan	Signature:	Date: 23/4/2025
Witnessed By : (Name of GCL)	Name: Raymond Lau	Signature:	Date: 23/4/2025
Witnessed By : (Name of AMMSV)	Name: Sam Lai	Signature:	Date: 23/4/2025
Witnessed By : (Name of ZHSD)	Name: WONG Cheong Shing CIE/TSC/1	Signature:	Date: 23 APR 2025
Witnessed By : (Name of)	Name:	Signature:	Date:

Gammon

CTA INTERNATIONAL AS CLEAN TUNNEL AIR

Air Purification System – HV Power Supply Units Test & Commissioning Report			
Contract No.:	HY/2019/13	RISC No.:	33640
Project:	Central Kowloon Route - Buildings, Electrical and Mechanical	Date:	23/4/2025
Location:	YVB / HVB / KVB	Room Name:	Plenum 2
T&C Plan Ref. No:	J3883-TVS-S-06283	Page:	
Ref. Dwg. No.:			

Part 4 : Functional and Performance Tests for HV Power Supply Units (Sheet 1 of 5)

A) Maximum Voltage Withstand Test for ESP Cell (TCP Section 4.6.1)

From:	ESP HV Switch Room 01 / 02	To:	APS Plenum No.01 / 02 / 03 Sub-assembly A / B / C / D / E

Step 1 & 3 - Insulation Resistance Test before and after the Maximum Voltage Withstand Test

Items	Circuit No. or Details of Equipment	Insulation Resistance (MΩ)	
		Before Max. Withstand Tests	After Max. Withstand Tests
1	(1st Col. Ionizer to Earth)	339 (Lower 3 ESP Cell) / 248 (Upper 3 ESP Cell)	360 (Lower 3 ESP Cell) / 318 (Upper 3 ESP Cell)
2	(2nd Col. Ionizer to Earth)	307 (Lower 3 ESP Cell) / 351 (Upper 3 ESP Cell)	313 (Lower 3 ESP Cell) / 433 (Upper 3 ESP Cell)
3	(3rd Col. Ionizer to Earth)	232 (Lower 3 ESP Cell) / 318 (Upper 3 ESP Cell)	234 (Lower 3 ESP Cell) / 791 (Upper 3 ESP Cell)
4	(1st to 3rd Col. Collector the Earth)	71.9 (1st Col.) / 73.3 (2nd Col.) / 66.5 (3rd Col.)	97.1 (1st Col.) / 91.6 (2nd Col.) / 116 (3rd Col.)

Step 2 - Maximum Voltage Withstand Test

Items	Test Voltage (kV DC)	Duration (min)	Measured Voltage (kV DC)	Test Result
1	20 (Ionizer)	1	20.1 / 19.8	P / F / NA
2	20 (Ionizer)		20.1 / 19.6	P / F / NA
3	20 (Ionizer)		20.1 / 19.9	P / F / NA
4	8 (Collector)	1	7.5	P / F / NA

B) List of Testing Equipment / Instruments

Type	Model	Serial No	Calibration Cert. No	Date of Cert.
HV insulation tester	AR3125	6819355	KS2525021278D001	25/02/2025
HV DC Voltage tester	HVP-40DM	20240221	AC2202503030802	03/03/2025

Remark: P / F / NA = Pass / Fail / Not Applicable
The passing criteria for the test is passing the insulation test after for maximum voltage withstand test.
The insulation resistance is over 1000MOhm (*) for HV DC Cable and 30MOhm for ESP Cell

Comment:

Test / Checked By : REW No.: Grade (Name of CTA Representative)	Name: Ho Tung	Signature:	Date: 23/04/2025
Witnessed By : (Name of JEC Representative)	Name: John Chan	Signature:	Date: 23/4/2025
Witnessed By : (Name of GCL)	Name: Raymond Lau	Signature:	Date: 23/04/2025
Witnessed By : (Name of AMMSU)	Name: Sam Lai	Signature:	Date: 23/04/2025
Witnessed By : (Name of ZMSD)	Name: WONG Cheong Shing CIE/TSC/1	Signature:	Date: 23 APR 2025
Witnessed By : (Name of)	Name:	Signature:	Date:

Gammon

CTA INTERNATIONAL AS CLEAN TUNNEL AIR

Air Purification System – HV Power Supply Units Test & Commissioning Report			
Contract No.:	HY/2019/13	RISC No.:	32052
Project:	Central Kowloon Route - Buildings, Electrical and Mechanical	Date:	27/03/2025
Location:	YVB / HVB / KVB	Room Name:	Plenum 3
T&C Plan Ref. No:	J3883-TVS-S-06283	Page:	
Ref. Dwg. No.:			

Part 1 : Installation Inspection of ESP HV Power Supply Cabinets (Sheet 1 of 3)			
A) ESP HV Power Supply Cabinets Information			
Cabinets ID:	KVB-APS3-ESP-PSC-01	Main Switch Rating:	~~63A~~ 80A
Location:	ESP HV Switch Room 01 / 02	Supply Fed From:	KVB-DB-ESP03

B) Visual Inspection for ESP HV Power Supply Cabinets (TCP Section 4.3.1)		
Items	**Description of Inspection**	**Test Result**
a.	Verify cabinets are installed per the accepted ESP HV Switch Room layout and plant room details	P / F / NA
b.	Check clearance space (≥1400mm front, ≥600mm rear) per EMSD CoP	P / F / NA
c.	Ensure cabinets are securely fixed, sealed, and free of damage, corrosion, wear, or dust	P / F / NA
d.	Check that the cabinet door, door handle and lock are installed and operated properly	P / F / NA
C) Visual Inspection for Cabinet Top Cooling Units (TCP Section 4.3.2)		
a.	Check that the cabinet top cooling units are without visual damage, corrosion or sign of wear and tear	P / F / NA
b.	Check that the cabinet top cooling unit is securely fixed on top of the cabinets according to the accepted shop drawing and fabrication drawing	P / F / NA
c.	Check the exhaust lourve of the cabinet cooling unit to ensure no obstructions or blockages	P / F / NA
d.	Check the internal air duct is connected properly with the cabinet top cooling unit	P / F / NA
e.	Check the cable connection between cabinet and cooling unit are completed properly	P / F / NA
Remark:	P / F / NA = Pass / Fail / Not Applicable	
Comment:		

Test / Checked By : REW No.: W134323 Grade A (Name of CTA Representative)	Name: LAI LEONG JAI	Signature:	Date: 27/03/2025
Witnessed By : (Name of JEC Representative)	Name: TONG HO	Signature:	Date: 27/03/2025
Witnessed By : (Name of GCL)	Name: Raymond Lau	Signature:	Date: 27/03/2025
Witnessed By : (Name of AMMJV)	Name: Sam Lui	Signature:	Date: 27/03/2025
Witnessed By : (Name of EMSD)	Name: WONG Cheong Shing CIE/TSC/1	Signature:	Date: 27 MAR 2025
Witnessed By : (Name of)	Name:	Signature:	Date:

Gammon

CTA INTERNATIONAL AS

Air Purification System – HV Power Supply Units Test & Commissioning Report			
Contract No.:	HY/2019/13	RISC No.:	32052
Project:	Central Kowloon Route - Buildings, Electrical and Mechanical	Date:	27/03/2025
Location:	YVB / HVB / KVB	Room Name:	Plenum 3
T&C Plan Ref. No:	J3883-TVS-S-06283	Page:	
Ref. Dwg. No.:			

Part 1 : Installation Inspection of ESP HV Power Supply Cabinets (Sheet 2 of 3)		
Items	**Description of Inspection**	**Test Result**
D) Visual Inspection for ESP HV Power Supply Units (TCP Section 4.3.3)		
a.	No visible damage to impair safety	P / F / NA
b.	Check that the ESP HV power supply units are securely fixed inside the Power Supply Cabinet with no physical damage, or signs of deterioration	P / F / NA
c.	Check and record the equipment ID, manufacturer, model number, serial number and other information, showing on the name plate for cabinet top cooling unit and ESP HV power supply units, and record it the initial installed location on the test form	P / F / NA
E) Visual Inspection for Accessories inside the Cabinet (TCP Section 4.3.4)		
a.	Check that the limit switch is securely fixed on rear door of the cabinet with proper cabling works	P / F / NA
Remark:	P / F / NA = Pass / Fail / Not Applicable	
Comment:		

Test / Checked By : REW No.: W134523 Grade A (Name of CTA Representative)	Name: LAI LEUNG TAK	Signature:	Date: 27/03/2025
Witnessed By : (Name of JEC Representative)	Name: TONY LO	Signature:	Date: 27/03/2025
Witnessed By : (Name of GCL)	Name: Raymond Lau	Signature:	Date: 27/03/2025
Witnessed By : (Name of AMMJV)	Name: Sam Lai	Signature:	Date: 27/03/2025
Witnessed By : (Name of ZHSD)	Name: WONG Cheong Shing CIE/TSC/I	Signature:	Date: 27 MAR 2025
Witnessed By : (Name of)	Name:	Signature:	Date:

Gammon

CTA INTERNATIONAL AS

Air Purification System – HV Power Supply Units Test & Commissioning Report			
Contract No.:	HY/2019/13	RISC No.:	32052
Project:	Central Kowloon Route - Buildings, Electrical and Mechanical	Date:	27/03/2025
Location:	YVB / HVB / KVB	Room Name:	Plenum 3
T&C Plan Ref. No:	53883-TVS-S-06283	Page:	
Ref. Dwg. No.:			

Part 1 : Installation Inspection of ESP HV Power Supply Cabinets (Sheet 1 of 3)			
A) ESP HV Power Supply Cabinets Information			
Cabinets ID:	KVB-APS3-ESP-PSC-02	Main Switch Rating:	~~63A~~ 90
Location:	ESP HV Switch Room 01 / 02	Supply Fed From:	KVB-DB-ESP03

B) Visual Inspection for ESP HV Power Supply Cabinets (TCP Section 4.3.1)		
Items	**Description of Inspection**	**Test Result**
a.	Verify cabinets are installed per the accepted ESP HV Switch Room layout and plant room details	P / F / NA
b.	Check clearance space (≥1400mm front, ≥600mm rear) per EMSD CoP	P / F / NA
c.	Ensure cabinets are securely fixed, sealed, and free of damage, corrosion, wear, or dust	P / F / NA
d.	Check that the cabinet door, door handle and lock are installed and operated properly	P / F / NA
C) Visual Inspection for Cabinet Top Cooling Units (TCP Section 4.3.2)		
a.	Check that the cabinet top cooling units are without visual damage, corrosion or sign of wear and tear	P / F / NA
b.	Check that the cabinet top cooling unit is securely fixed on top of the cabinets according to the accepted shop drawing and fabrication drawing	P / F / NA
c.	Check the exhaust lourve of the cabinet cooling unit to ensure no obstructions or blockages	P / F / NA
d.	Check the internal air duct is connected properly with the cabinet top cooling unit	P / F / NA
e.	Check the cable connection between cabinet and cooling unit are completed properly	P / F / NA
Remark:	P / F / NA = Pass / Fail / Not Applicable	
Comment:		

Test / Checked By : REW No.: W134523 Grade A (Name of CTA Representative)	Name: LOI LEUNG TAI	Signature:	Date: 27/03/2025
Witnessed By : (Name of JEC Representative)	Name: TONY HO	Signature:	Date: 27/03/2025
Witnessed By : (Name of GCL)	Name: Raymond Lau	Signature:	Date: 27/03/2025
Witnessed By : (Name of AMMJV)	Name: Sam Lai	Signature:	Date: 27/03/2025
Witnessed By : (Name of EMSD)	Name: WONG Cheong Shing CIE/TSC/1	Signature:	Date: 27 MAR 2025
Witnessed By : (Name of)	Name:	Signature:	Date:

Gammon

CIA INTERNATIONAL AS

Air Purification System – HV Power Supply Units Test & Commissioning Report			
Contract No.:	HY/2019/13	RISC No.:	32052
Project:	Central Kowloon Route - Buildings, Electrical and Mechanical	Date:	27/03/2025
Location:	YVB / HVB / RVB	Room Name:	Plenum 3
T&C Plan Ref. No:	J3883-TVS-S-06283	Page:	
Ref. Dwg. No.:			

Part 1 : Installation Inspection of ESP HV Power Supply Cabinets (Sheet 2 of 3)		
Items	**Description of Inspection**	**Test Result**
D) Visual Inspection for ESP HV Power Supply Units (TCP Section 4.3.3)		
a.	No visible damage to impair safety	P / F / NA
b.	Check that the ESP HV power supply units are securely fixed inside the Power Supply Cabinet with no physical damage, or signs of deterioration	P / F / NA
c.	Check and record the equipment ID, manufacturer, model number, serial number and other information, showing on the name plate for cabinet top cooling unit and ESP HV power supply units, and record it the initial installed location on the test form	P / F / NA
E) Visual Inspection for Accessories inside the Cabinet (TCP Section 4.3.4)		
a.	Check that the limit switch is securely fixed on rear door of the cabinet with proper cabling works	P / F / NA
Remark:	P / F / NA = Pass / Fail / Not Applicable	
Comment:		

Test / Checked By : REW No.: W13453 Grade A (Name of CTA Representative)	Name: LAI LEUNG TAT	Signature:	Date: 27/03/2025
Witnessed By : (Name of JEC Representative)	Name: Tony Ho	Signature:	Date: 27/03/2025
Witnessed By : (Name of GCL)	Name: Raymond Law	Signature:	Date: 27/03/2025
Witnessed By : (Name of AMNSV)	Name: Sam Lui	Signature:	Date: 27/03/2025
Witnessed By : (Name of ZMSD)	Name: WONG Cheong Shing CIE/TSC/1	Signature:	Date: 27 MAR 2025
Witnessed By : (Name of)	Name:	Signature:	Date:

Gammon

CIA INTERNATIONAL AS CLEAN TUNNEL AIR

Air Purification System – HV Power Supply Units Test & Commissioning Report			
Contract No.:	HY/2019/13	RISC No.:	032053
Project:	Central Kowloon Route - Buildings, Electrical and Mechanical	Date:	03 APR 2025
Location:	YVB / HVB / KVB	Room Name:	Plenum 3
T&C Plan Ref. No:	J3883-TVS-S-6283	Page:	
Ref. Dwg. No.:	J3883-TVS-S-2432		

Part 2: Installation Inspection and Cable Tests for HV DC Cables (Sheet 1 of 2)

A) Visual Inspection (TCP Section 4.4.1)

Items	Description of Inspection	Test Result
a)	No visible damage to impair safety	(P) / F / NA
b)	Ensure all cables, HV connectors, cable glands & accessories are in good condition	(P) / F / NA
c)	All conductors are correctly and securely connected and identified, protected against mechanical damage, and adequately supported	(P) / F / NA

B) HV DC Cable Continuity Tests (TCP Section 4.4.2)

From:	ESP HV Switch Room (01) / 02	To:	APS Plenum No.01 / 02 / (03) Sub-assembly (A) / B / C / D / E

Items	Circuit No. or Details of Equipment	Cable Length	Continuity Resistance (Ω) Measured	Calculated	Passing Criteria	Test Result
1	KVB-APS03-HVC-1 Ionizer 1	21.4m	0.6Ω	0.30	0.52	(P) / F / NA
2	KVB-APS03-HVC-2 Ionizer 2	21.9m		0.30	0.54	(P) / F / NA
3	KVB-APS03-HVC-3 Ionizer 3	22.8m	0.66Ω	0.33	0.56	(P) / F / NA
4	KVB-APS03-HVC-4 Collector	23.1m		0.33	0.57	(P) / F / NA

C) List of Testing Equipment / Instruments

Type	Model	Serial No	Calibration Cert. No	Date of Cert.
Digital Micro Ohmmeter	UT620CT	C242921984	AC2202502220127	22/02/2025
Cable fault tester	LCT268-2(KM)	250219005	AC2202502220096	22/02/2025

Remark: P / F / NA = Pass / Fail / Not Applicable
Insulation Resistance should be >1000MΩ, Continuity Resistance shall be < 0.0245Ω/m **(B)**

Comment:

Test / Checked By : REW No.: Grade (Name of CTA Representative)	Name: Ho Tung	Signature:	Date: 03 APR 2025
Witnessed By : (Name of JEC Representative)	Name: Tony Ho	Signature:	Date: 03 APR 2025
Witnessed By : (Name of BCL)	Name: Crystal Cheung	Signature:	Date: 03 APR 2025
Witnessed By : (Name of AMJV)	Name: Sam Lui	Signature:	Date: 03/04/2025
Witnessed By : (Name of ZMJV)	Name: WONG Cheong Shing CIE/TSC/1	Signature:	Date: - 3 APR 2025
Witnessed By : (Name of)	Name:	Signature:	Date:

Gammon

CIA INTERNATIONAL AS CLEAN TUNNEL AIR

Air Purification System – HV Power Supply Units Test & Commissioning Report			
Contract No.:	HY/2019/13	RISC No.:	32053
Project:	Central Kowloon Route - Buildings, Electrical and Mechanical	Date:	03 APR 2025
Location:	YVB / HVB / KVB	Room Name:	~~Pln~~ Plenum 3
T&C Plan Ref. No:	T38P3-TVS-S-6283	Page:	
Ref. Dwg. No.:	T38P3-TVS-D-2432		

Part 2: Installation Inspection and Cable Tests for HV DC Cables (Sheet 1 of 2)

A) Visual Inspection (TCP Section 4.4.1)

Items	Description of Inspection	Test Result
a)	No visible damage to impair safety	(P) / F / NA
b)	Ensure all cables, HV connectors, cable glands & accessories are in good condition	(P) / F / NA
c)	All conductors are correctly and securely connected and identified, protected against mechanical damage, and adequately supported	(P) / F / NA

B) HV DC Cable Continuity Tests (TCP Section 4.4.2)

From: ESP HV Switch Room (01) / 02 To: APS Plenum No.01 / 02 / (03) Sub-assembly A / B / (C) / D / E

Items	Circuit No. or Details of Equipment	Cable Length	Continuity Resistance (Ω) Measured	Calculated	Passing Criteria	Test Result
1	K VB-APS03-HVC-01 Ionizer 1	26.3m	0.85Ω	0.42	0.64	(P) / F / NA
2	K VB-APS03-HVC-02 Ionizer 2	26.6m		0.43	0.65	(P) / F / NA
3	K VB-APS03-HVC-03 Ionizer 3	26.0m	0.84Ω	0.42	0.64	(P) / F / NA
4	K VB-APS03-HVC-12 Collector	26.6m		0.42	0.65	(P) / F / NA

C) List of Testing Equipment / Instruments

Type	Model	Serial No	Calibration Cert. No	Date of Cert.
Digital Micro Ohmmeter	UT620 C+	C242921984	ACZ202502220127	22/02/2025
Cable fault tester	LCT268-2(km)	250219005	ACZ202502220096	22/02/2025

Remark: P / F / NA = Pass / Fail / Not Applicable
Insulation Resistance should be >1000MΩ, Continuity Resistance shall be < 0.0245Ω/m **(B)**

Comment:

	Name:	Signature:	Date:
Test / Checked By : REW No.: Grade (Name of CTA Representative)	Ho Tung		03 APR 2025
Witnessed By : (Name of JEC Representative)	Tony Ho		03 APR 2025
Witnessed By : (Name of GCL)	Crystal Cheung		03 APR 2025
Witnessed By : (Name of AMCS)	Sam Lui		03/04/2025
Witnessed By : (Name of EMSD)	WONG Cheong Shing CIE/TSC/1		- 3 APR 2025
Witnessed By : (Name of)			

Gammon

CIA INTERNATIONAL A/S CLEAN TUNNEL A/S

Air Purification System – HV Power Supply Units Test & Commissioning Report			
Contract No.:	HY/2019/13	RISC No.:	32053
Project:	Central Kowloon Route - Buildings, Electrical and Mechanical	Date:	03 APR 2025
Location:	YVB / HVB / KVB	Room Name:	Plenum 3
T&C Plan Ref. No:	J3883-TVS-S-6283	Page:	
Ref. Dwg. No.:	J3883-TVS-D-2432		

Part 2: Installation Inspection and Cable Tests for HV DC Cables (Sheet 1 of 2)

A) Visual Inspection (TCP Section 4.4.1)

Items	Description of Inspection	Test Result
a)	No visible damage to impair safety	P / F / NA
b)	Ensure all cables, HV connectors, cable glands & accessories are in good condition	P / F / NA
c)	All conductors are correctly and securely connected and identified, protected against mechanical damage, and adequately supported	P / F / NA

B) HV DC Cable Continuity Tests (TCP Section 4.4.2)

From: ESP HV Switch Room 01 / 02 To: APS Plenum No.01 / 02 / 03 Sub-assembly A / B / C / D / E

Items	Circuit No. or Details of Equipment	Cable Length	Continuity Resistance (Ω)			Test Result
			Measured	Calculated	Passing Criteria	
1	KVB-APS03-HVC-12 Ionizer 1	26.9 m	0.94Ω	0.46	0.66	P / F / NA
2	KVB-APS03-HVC-14 Ionizer 2	27.5 m		0.48	0.67	P / F / NA
3	KVB-APS03-HVC-15 Ionizer 3	28.1 m	0.99Ω	0.49	0.69	P / F / NA
4	KVB-APS03-HVC-16 Collector	28.7 m		0.50	0.70	P / F / NA

C) List of Testing Equipment / Instruments

Type	Model	Serial No	Calibration Cert. No	Date of Cert.
Digital Micro Ohmmeter	UT620 CT	C242921984	AC220250220127	22/02/2025
Cable fault tester	LCT268-2(km)	250219005	AC220250220096	22/02/2025

Remark: P / F / NA = Pass / Fail / Not Applicable
Insulation Resistance should be >1000MΩ, Continuity Resistance shall be < 0.0245Ω/m (B)

Comment:

	Name:	Signature:	Date:
Test / Checked By : REW No.: Grade (Name of CTA Representative)	HO Tus		03 APR 2025
Witnessed By : (Name of JEC Representative)	Tony Ho		03 APR 2025
Witnessed By : (Name of GCL)	Crystal Cheung		03 APR 2025
Witnessed By : (Name of AMNSU)	Sam Lai		03/04/2025
Witnessed By : (Name of ZMSD)	WONG Cheong Shing CIE/TSC/I		- 3 APR 2025
Witnessed By : (Name of)			

Gammon

CTA INTERNATIONAL AS CLEAN TUNNEL AIR

Air Purification System – HV Power Supply Units Test & Commissioning Report			
Contract No.:	HY/2019/13	RISC No.:	32053
Project:	Central Kowloon Route - Buildings, Electrical and Mechanical	Date:	03 APR 2025
Location:	YVB / HVB / KVB	Room Name:	Plenum 3
T&C Plan Ref. No:	T3883-TVS-S-6283	Page:	
Ref. Dwg. No.:	T3883-TVS-D-2432		

Part 2: Installation Inspection and Cable Tests for HV DC Cables (Sheet 1 of 2)

A) Visual Inspection (TCP Section 4.4.1)

Items	Description of Inspection	Test Result
a)	No visible damage to impair safety	P / F / NA
b)	Ensure all cables, HV connectors, cable glands & accessories are in good condition	P / F / NA
c)	All conductors are correctly and securely connected and identified, protected against mechanical damage, and adequately supported	P / F / NA

B) HV DC Cable Continuity Tests (TCP Section 4.4.2)

From: ESP HV Switch Room 01 / 02 To: APS Plenum No.01 / 02 / 03 Sub-assembly A / B / C / D / E

Items	Circuit No. or Details of Equipment	Cable Length	Continuity Resistance (Ω) Measured	Calculated	Passing Criteria	Test Result
1	KVB-APS3-HVC-17 Ionizer 1	29.5 m	1.09 Ω	0.54	0.72	P / F / NA
2	KVB-APS3-HVC-18 Ionizer 2	29.8 m		0.55	0.73	P / F / NA
3	KVB-APS3-HVC-19 Ionizer 3	30.7 m	1.14 Ω	0.56	0.75	P / F / NA
4	KVB-APS3-HVC-20 Collector	31.3 m		0.58	0.77	P / F / NA

C) List of Testing Equipment / Instruments

Type	Model	Serial No	Calibration Cert. No	Date of Cert.
Digital Micro Ohmmeter	UT620C+	C242921984	AC2202502220127	22/02/2025
Cable fault tester	LCT268-2(km)	250219005	AC2202502220096	22/02/2025

Remark: P / F / NA = Pass / Fail / Not Applicable
Insulation Resistance should be >1000MΩ, Continuity Resistance shall be < 0.0245Ω/m **(B)**

Comment:

Test / Checked By : REW No.: Grade (Name of CTA Representative)	Name: Ho Tung	Signature:	Date: 03 APR 2025
Witnessed By : (Name of JEC Representative)	Name: Tony Ho	Signature:	Date: 03 APR 2025
Witnessed By : (Name of GCL)	Name: Crystal Cheung	Signature:	Date: 03 APR 2025
Witnessed By : (Name of AMSU)	Name: Sam Lai	Signature:	Date: 03/04/2025
Witnessed By : (Name of EMSD)	Name: WONG Cheong Shing CIE/TSC/1	Signature:	Date: - 3 APR 2025
Witnessed By : (Name of)	Name:	Signature:	Date:

Gammon

CTA INTERNATIONAL AS

Air Purification System – HV Power Supply Units Test & Commissioning Report			
Contract No.:	HY/2019/13	RISC No.:	032053
Project:	Central Kowloon Route - Buildings, Electrical and Mechanical	Date:	3/4/2025
Location:	~~VVB~~ / ~~HVB~~ / KVB	Room Name:	Plenum 3
T&C Plan Ref. No:	T3PP3 - TVS-S-6283	Page:	
Ref. Dwg. No.:	T3PP3 - TVS- D- 2482		

Part 2: Installation Inspection and Cable Tests for HV DC Cables (2 of 2)

D) Maximum Voltage Withstand Test for HV DC Cable (TCP Section 4.4.3)

Step 1 & 3 - Insulation Resistance Test before and after the Maximum Voltage Withstand Test

From:	ESP HV Switch Room 01 / 02	To:	APS Plenum No.01 / 02 / 03 Sub-assembly A / B / C / D / E

Items	Circuit No. or Details of Equipment	Cable Length	Insulation Resistance (MΩ) before Step 2	Insulation Resistance (MΩ) after Step 2	Test Result
1	K VB-APS03-HVC-1 Ionizer 1	21.4m	13.7GΩ	277.0GΩ	P / F / NA
2	K VB-APS03-HVC-2 Ionizer 2	21.9m	14.1GΩ	290.0GΩ	P / F / NA
3	K VB-APS03-HVC-3 Ionizer 3	22.8m	26.5GΩ	242.0GΩ	P / F / NA
4	K VB-APS03-HVC-P Collector	23.1m	56.3GΩ	87.7GΩ	P / F / NA

Step 2 - Maximum Voltage Withstand Test

Items	Circuit No. or Details of Equipment	Test Voltage (kV DC)	Duration (Min)	Measured Voltage
1	K VB-APS03-HVC-1 Ionizer 1	20	1	20.3 kV
2	K VB-APS03-HVC-2 Ionizer 2	20	1	20.3 kV
3	K VB-APS03-HVC-3 Ionizer 3	20	1	20.3 kV
4	K VB-APS03-HVC-P Collector	20	1	20.3 kV

E) List of Testing Equipment / Instruments

Type	Model	Serial No	Calibration Cert. No	Date of Cert.
HV insulation tester	AR3125	6819355	KS25250212780001	26/02/2025
HV DC Voltage Meter	HVP-40DM	20240221	AC2202503030802	03/03/2025

Remark: P / F / NA = Pass / Fail / Not Applicable,
The passing criteria for the test is passing the insulation test after for maximum voltage withstand test.
The insulation resistance is over 1000MOhm (*) for HV DC Cable and 30MOhm for ESP Cell

Comment:

	Name:	Signature:	Date:
Test / Checked By : REW No.: Grade (Name of CTA Representative)	Ho Tung		03 APR 2025
Witnessed By : (Name of JEC Representative)	Tony Ho		03 APR 2025
Witnessed By : (Name of BCL)	Crystal Cheung		03 APR 2025
Witnessed By : (Name of AMMSV)	Sam Lau		03/04/2025
Witnessed By : (Name of ZMSD)	WONG Cheong Shing CIE/TSC/1		- 3 APR 2025
Witnessed By : (Name of)			

Gammon

CIA INTERNATIONAL AS CLEAN TUNNEL AIR

Air Purification System – HV Power Supply Units Test & Commissioning Report			
Contract No.:	HY/2019/13	RISC No.:	32053
Project:	Central Kowloon Route - Buildings, Electrical and Mechanical	Date:	03 APR 2025
Location:	YVB / HVB / KVB	Room Name:	plenum 3
T&C Plan Ref. No:	13883- TVS-S-0283	Page:	
Ref. Dwg. No.:	13883- TVS- D-2432		

Part 2: Installation Inspection and Cable Tests for HV DC Cables (2 of 2)

D) Maximum Voltage Withstand Test for HV DC Cable (TCP Section 4.4.3)

Step 1 & 3 - Insulation Resistance Test before and after the Maximum Voltage Withstand Test

From:	ESP HV Switch Room 01 / 02	To:	APS Plenum No.01 / 02 / 03 Sub-assembly A / B / C / D / E

Items	Circuit No. or Details of Equipment	Cable Length	Insulation Resistance (MΩ) before Step 2	Insulation Resistance (MΩ) after Step 2	Test Result
1	KVB-APS03-HVC-5 Ionizer 1	24.3m	25.0 GΩ	238.0 GΩ	P / F / NA
2	KVB-APS03-HVC-6 Ionizer 2	24.9m	44.0 GΩ	219.0 GΩ	P / F / NA
3	KVB-APS03-HVC-7 Ionizer 3	25.7m	49.4 GΩ	227.0 GΩ	P / F / NA
4	KVB-APS03-HVC-8 Collector	26.0m	89.0 GΩ	94.0 GΩ	P / F / NA

Step 2 - Maximum Voltage Withstand Test

Items	Circuit No. or Details of Equipment	Test Voltage (kV DC)	Duration (Min)	Measured Voltage
1	KVB-APS03-HVC-5 Ionizer 1	20	1	20.3 kV
2	KVB-APS03-HVC-6 Ionizer 2	20	1	20.3 kV
3	KVB-APS03-HVC-7 Ionizer 3	20	1	20.3 kV
4	KVB-APS03-HVC-8 Collector	20	1	20.3 kV

E) List of Testing Equipment / Instruments

Type	Model	Serial No	Calibration Cert. No	Date of Cert.
HV insulation tester	AR3125	6819355	KS2525021278D001	26/02/2025
HV DC Voltage Meter	HVP-40DM	20240221	AC22025030308 02	03/03/2025

Remark: P / F / NA = Pass / Fail / Not Applicable,
The passing criteria for the test is passing the insulation test after for maximum voltage withstand test.
The insulation resistance is over 1000MOhm (*) for HV DC Cable and 30MOhm for ESP Cell

Comment:

	Name:	Signature:	Date:
Test / Checked By : REW No.: Grade (Name of CTA Representative)	Ho Tung		03 APR 2025
Witnessed By : (Name of JEC Representative)	Tony Ho		03 APR 2025
Witnessed By : (Name of GCL)	Crystal Cheung		03 APR 2025
Witnessed By : (Name of AMMJV)	Sam Lui		03/04/2025
Witnessed By : (Name of ZMSD)	WONG Cheong Shing CIE/TSC/1		- 3 APR 2025
Witnessed By : (Name of)			

Gammon

CTA INTERNATIONAL AS CLEAN TUNNEL AIR

Air Purification System – HV Power Supply Units Test & Commissioning Report			
Contract No.:	HY/2019/13	RISC No.:	32053
Project:	Central Kowloon Route - Buildings, Electrical and Mechanical	Date:	03 APR 2025
Location:	YVB / HVB / KVB	Room Name:	Plenum 3
T&C Plan Ref. No:	T3883 - TVS-S - 6283	Page:	
Ref. Dwg. No.:	T3883 - TVS- D - 32432		

Part 2: Installation Inspection and Cable Tests for HV DC Cables (2 of 2)

D) Maximum Voltage Withstand Test for HV DC Cable (TCP Section 4.4.3)

Step 1 & 3 - Insulation Resistance Test before and after the Maximum Voltage Withstand Test

From:	ESP HV Switch Room 01 / 02	To:	APS Plenum No.01 / 02 / 03 Sub-assembly A / B / C / D / E

Items	Circuit No. or Details of Equipment	Cable Length	Insulation Resistance (MΩ) before Step 2	Insulation Resistance (MΩ) after Step 2	Test Result
1	KVB-APS03-HVC-9 Ionizer 1	26.3m	96.0 GΩ	112.0 GΩ	P / F / NA
2	KVB-APS03-HVC-10 Ionizer 2	26.6m	55.0 GΩ	252.0 GΩ	P / F / NA
3	KVB-APS03-HVC-11 Ionizer 3	26.0m	52.2 GΩ	29.6 GΩ	P / F / NA
4	KVB-APS03-HVC-12 Collector	26.6m	324.0 GΩ	> 999.0 GΩ	P / F / NA

Step 2 - Maximum Voltage Withstand Test

Items	Circuit No. or Details of Equipment	Test Voltage (kV DC)	Duration (Min)	Measured Voltage
1	KVB-APS03-HVC-9 Ionizer 1	20	1	20.3 kV
2	KVB-APS03-HVC-10 Ionizer 2	20	1	20.3 kV
3	KVB-APS03-HVC-11 Ionizer 3	20	1	20.3 kV
4	KVB-APS03-HVC-12 Collector	20	1	20.3 kV

E) List of Testing Equipment / Instruments

Type	Model	Serial No	Calibration Cert. No	Date of Cert.
HV insulation tester	AR3125	68 19355	KS2502122 8D001	26/02/2025
HV DC Voltage Meter	HVP-40DM	20240221	AC2202503030802	03/03/2025

Remark: P / F / NA = Pass / Fail / Not Applicable,
The passing criteria for the test is passing the insulation test after for maximum voltage withstand test.
The insulation resistance is over 1000MOhm (*) for HV DC Cable and 30MOhm for ESP Cell

Comment:

	Name:	Signature:	Date:
Test / Checked By : REW No.: Grade (Name of CTA Representative)	Ho Tung		03 APR 2025
Witnessed By : (Name of JEC Representative)	Tony Ho		03 APR 2025
Witnessed By : (Name of GCL)	Crystal Cheung		03 APR 2025
Witnessed By : (Name of AMSU)	Sam Lai		03/04/2025
Witnessed By : (Name of ZMSD)	WONG Cheong Shing CIE/TSC/1		- 3 APR 2025
Witnessed By : (Name of)			

Gammon

CTA INTERNATIONAL AS

Air Purification System – HV Power Supply Units Test & Commissioning Report			
Contract No.:	HY/2019/13	RISC No.:	32053
Project:	Central Kowloon Route - Buildings, Electrical and Mechanical	Date:	03 APR 2025
Location:	~~VVB~~ / ~~HVB~~ / KVB	Room Name:	Plenum 3
T&C Plan Ref. No:	TS883- TVS- S- 0283	Page:	
Ref. Dwg. No.:	TS883- TVS- D-2432		

Part 2: Installation Inspection and Cable Tests for HV DC Cables (2 of 2)

D) Maximum Voltage Withstand Test for HV DC Cable (TCP Section 4.4.3)

Step 1 & 3 - Insulation Resistance Test before and after the Maximum Voltage Withstand Test

From:	ESP HV Switch Room 01 / 02	To:	APS Plenum No.01 / 02 / 03 Sub-assembly A / B / C / D / E

Items	Circuit No. or Details of Equipment	Cable Length	Insulation Resistance (MΩ) before Step 2	Insulation Resistance (MΩ) after Step 2	Test Result
1	KVB-APS03-HVC-13 Ionizer 1	26.9m	91.4 GΩ	254.0 GΩ	P / F / NA
2	KVB-APS03-HVC-14 Ionizer 2	27.5m	35.6 GΩ	>999.0 GΩ	P / F / NA
3	KVB-APS03-HVC-15 Ionizer 3	28.1m	133.0 GΩ	65.8 GΩ	P / F / NA
4	KVB-APS03-HVC-16 Collector	28.7m	61.0 GΩ	78.7 GΩ	P / F / NA

Step 2 - Maximum Voltage Withstand Test

Items	Circuit No. or Details of Equipment	Test Voltage (kV DC)	Duration (Min)	Measured Voltage
1	KVB-APS03-HVC-13 Ionizer 1	20	1	20.3 kV
2	KVB-APS03-HVC-14 Ionizer 2	20	1	20.3 kV
3	KVB-APS03-HVC-15 Ionizer 3	20	1	20.3 kV
4	KVB-APS03-HVC-16 Collector	20	1	20.3 kV

E) List of Testing Equipment / Instruments

Type	Model	Serial No	Calibration Cert. No	Date of Cert.
HV insulation tester	AR3125	6819355	KS252502427800001	26/02/2025
HV DC Voltage Meter	HVP-40DM	20240221	AC220250303 0802	03/03/2025

Remark: P / F / NA = Pass / Fail / Not Applicable,
The passing criteria for the test is passing the insulation test after for maximum voltage withstand test.
The insulation resistance is over 1000MOhm (*) for HV DC Cable and 30MOhm for ESP Cell

Comment:

	Name:	Signature:	Date:
Test / Checked By : REW No.: Grade (Name of CTA Representative)	Ho Tsz		03 APR 2025
Witnessed By : (Name of JEC Representative)	Tony Ho		03 APR 2025
Witnessed By : (Name of GCL)	Crystal Cheung		03 APR 2025
Witnessed By : (Name of AMMSU)	Sam Lai		03/04/2025
Witnessed By : (Name of ZMQD)	WONG Cheong Shing CIE/TSC/1		- 3 APR 2025
Witnessed By : (Name of)			

Gammon

CIA INTERNATIONAL AS CLEAN TUNNEL AIR

Air Purification System – HV Power Supply Units Test & Commissioning Report			
Contract No.:	HY/2019/13	RISC No.:	032053
Project:	Central Kowloon Route - Buildings, Electrical and Mechanical	Date:	3/4/2025
Location:	~~XVB~~ / ~~HVB~~ / KVB	Room Name:	Plenum 3
T&C Plan Ref. No:	13883 - TVS - S 6283	Page:	
Ref. Dwg. No.:	13883 - TVS - D - 2432		

Part 2: Installation Inspection and Cable Tests for HV DC Cables (2 of 2)

D) Maximum Voltage Withstand Test for HV DC Cable (TCP Section 4.4.3)

Step 1 & 3 - Insulation Resistance Test before and after the Maximum Voltage Withstand Test

From:	ESP HV Switch Room 01 / 02	To:	APS Plenum No.01 / 02 / 03 Sub-assembly A / B / C / D / E

Items	Circuit No. or Details of Equipment	Cable Length	Insulation Resistance (MΩ) before Step 2	Insulation Resistance (MΩ) after Step 2	Test Result
1	K VB-APS03-HVC-17 Ionizer 1	29.5m	64.2 GΩ	154.0 GΩ	P / F / NA
2	K VB-APS03-HVC-18 Ionizer 2	29.8m	24.5 GΩ	73.2 GΩ	P / F / NA
3	K VB-APS03-HVC-19 Ionizer 3	30.7m	89.6 GΩ	34.7 GΩ	P / F / NA
4	K VB-APS03-HVC-20 Collector	31.3m	86.3 GΩ	51.5 GΩ	P / F / NA

Step 2 - Maximum Voltage Withstand Test

Items	Circuit No. or Details of Equipment	Test Voltage (kV DC)	Duration (Min)	Measured Voltage
1	K VB-APS03-HVC-17 Ionizer 1	20	1	20.3 kV
2	K VB-APS03-HVC-18 Ionizer 2	20	1	20.3 kV
3	K VB-APS03-HVC-19 Ionizer 3	20	1	20.3 kV
4	K VB-APS03-HVC-20 Collector	20	1	20.3 kV

E) List of Testing Equipment / Instruments

Type	Model	Serial No	Calibration Cert. No	Date of Cert.
HV insulation tester	AR3125	6819355	KS2525021278D001	26/02/2025
HV DC Voltage Meter	HVP-40DM	20240221	AC2202503030802	03/03/2025

Remark: P / F / NA = Pass / Fail / Not Applicable,
The passing criteria for the test is passing the insulation test after for maximum voltage withstand test.
The insulation resistance is over 1000MOhm (*) for HV DC Cable and 30MOhm for ESP Cell

Comment:

	Name:	Signature:	Date:
Test / Checked By : REW No.: Grade (Name of CTA Representative)	Ho Ty		03 APR 2025
Witnessed By : (Name of JEC Representative)	Tony Ho		03 APR 2025
Witnessed By : (Name of BCL)	Crystal Cheung		03 APR 2025
Witnessed By : (Name of AMJV)	Sam Lui		05/04/2025
Witnessed By : (Name of ZMJV)	WONG Cheong Shing CIE/TSC/1		- 3 APR 2025
Witnessed By : (Name of)			

Gammon

CIA INTERNATIONAL AS CLEAN TUNNEL AIR

Air Purification System – HV Power Supply Units Test & Commissioning Report			
Contract No.:	HY/2019/13	RISC No.:	32054
Project:	Central Kowloon Route - Buildings, Electrical and Mechanical	Date:	21/03/2025
Location:	~~YVB / HVB~~ / KVB	Room Name:	HV Room 1
T&C Plan Ref. No:	J3883-TVS-S-06283	Page:	
Ref. Dwg. No.:			

Part 3: Inspection and Test for Electrical Installation of ESP Filter (TCP Section 4.5)

Statutory Inspection and Test for LV and HV DC Installation (Sheet 1 of 10)

Items	Description of Inspection	Test Result
A) Visual Inspection (ASD TCP-EE, COP Code 21A/C and COP Appendix 13) - Working Space and Facilities (L.V.)		
a.	Adequacy working space and safe access provided for switch room / electrical facilities.	P / F / NA
b.	Entrance / exit to switch room and/or electrical facilities are free of obstruction.	P / F / NA
c.	Suitable locking facilities provided for switch room and /or electrical facilities.	P / F / NA
d.	Suitable lighting provision provided for switch room and /or electrical facilities.	P / F / NA
e.	Suitable ventilation provision provided for switch room and /or electrical facilities.	P / F / NA
f.	A warning notice 'DANGER — ELECTRICITY, UNAUTHORISED ENTRY PROHIBITED' and '危 險 —— 有電，未經授權不得內進' provided at every entrance of switch room.	P / F / NA
g.	Danger notices, warning notices, schematic diagrams, instructions and similar information are correctly and adequately provided.	P / F / NA
h.	Warning notices for Switch Rooms provided in compliance with EMSD CoP Code 17.	P / F / NA
i.	Warning notices for earthing and main bonding connections provided in compliance with EMSD CoP Code 17.	P / F / NA
j.	All switchgears, distribution boards and electrical equipment properly labelled in compliance with EMSD CoP Code 4D(1).	P / F / NA
k.	Continuity of protective conductors especially the bonding of all exposed conductive parts are satisfactory.	P / F / NA
l.	Logbook provided and work done properly recorded.	P / F / NA
Remark:	P / F / NA = Pass / Fail / Not Applicable	
Comment:		

Test / Checked By : REW No.: Grade (Name of CTA Representative)	Name: Ho Tung	Signature: Ho Tung	Date: 21/03/2025
Witnessed By : (Name of JEC Representative)	Name: CHUNG	Signature:	Date: 21/03/2025
Witnessed By : (Name of GCL)	Name: Raymond Lau	Signature:	Date: 21/03/2025
Witnessed By : AMMJV (Name of)	Name: Eric Tang	Signature:	Date: 21/03/25
Witnessed By : (Name of)	Name:	Signature:	Date:
Witnessed By : (Name of)	Name:	Signature:	Date:

Gammon

CTA INTERNATIONAL AS CLEAN TUNNEL AIR

Air Purification System – HV Power Supply Units Test & Commissioning Report			
Contract No.:	HY/2019/13	RISC No.:	32054
Project:	Central Kowloon Route - Buildings, Electrical and Mechanical	Date:	21/03/2025
Location:	~~YVB / HVB~~ / KVB	Room Name:	HV Room 1
T&C Plan Ref. No:	J3883-TVS-S-06283	Page:	
Ref. Dwg. No.:			

Part 3: Inspection and Test for Electrical Installation of ESP Filter (TCP Section 4.5)

Statutory Inspection and Test for LV and HV DC Installation (Sheet 2 of 10)

Items	Description of Inspection	Test Result
B) Visual Inspection (ASD TCP-EE, COP Code 21A & C and COP Appendix 13) - Distribution Board (L.V.)		
a.	No visible damage to impair safety	P / F / NA
b.	No fuse installed in the neutral circuit.	P / F / NA
c.	All live parts screened with an insulating plate or earthed metal	P / F / NA
d.	All exposed metal parts effectively earthed.	P / F / NA
e.	A warning notice 'DANGER' and '危險' provided on the front panel of every distribution board.	P / F / NA
f.	A notice of periodic testing provided at or near the main distribution board incorporating a residual current device.	P / F / NA
g.	Safe access & adequate clearance space provided in compliance with EMSD CoP Code 4E.	P / F / NA
h.	Distribution boards securely mounted on suitable supports.	P / F / NA
i.	A suitable switch provided to control each distribution board.	P / F / NA
j.	Phase Identification for distribution board provided.	P / F / NA
k.	Check the breaking capacity of MCB / RCBO (6kA) in compliance with EMSD CoP Code 9.	P / F / NA
l.	Circuits connected to MCB / RCBO in accordance with the schematic diagram.	P / F / NA

Remark: P / F / NA = Pass / Fail / Not Applicable

Comment:

Test / Checked By : REW No.: Grade (Name of CTA Representative)	Name: Ho Tung	Signature: Ho Tung	Date: 21/03/2025
Witnessed By : (Name of JEC Representative)	Name: Chung Tg	Signature:	Date: 21/03/2025
Witnessed By : (Name of GCL)	Name: Raymond Lau	Signature:	Date: 21/03/2025
Witnessed By : AMMJV (Name of)	Name: Eric Tang	Signature:	Date: 21/03/25
Witnessed By : (Name of)	Name:	Signature:	Date:
Witnessed By : (Name of)	Name:	Signature:	Date:

Gammon

CIA INTERNATIONAL AS CLEAN TUNNEL AIR

Air Purification System – HV Power Supply Units Test & Commissioning Report			
Contract No.:	HY/2019/13	RISC No.:	32054
Project:	Central Kowloon Route - Buildings, Electrical and Mechanical	Date:	21/03/2025
Location:	~~TVB / HVB /~~ KVB	Room Name:	HV Room 1
T&C Plan Ref. No:	J3883-TVS-S-06283	Page:	
Ref. Dwg. No.:			

Part 3: Inspection and Test for Electrical Installation of ESP Filter (TCP Section 4.5)

Statutory Inspection and Test for LV and HV DC Installation (Sheet 3 of 10)

Items	Description of Inspection	Test Result
C) Visual Inspection (ASD TCP-EE, COP Code 21A & C and COP Appendix 13) - Conductors, Cables and Wirings (L.V.)		
a.	No visible damage to impair safety.	P / F / NA
b.	All live conductors and their methods of insulation, in relation to design currents of circuits and to the operating currents of the protective devices, are properly selected and erected.	P / F / NA
c.	All cables, flexible cords, switches, plugs and socket outlets, accessories and equipment are found to be in good working conditions.	P / F / NA
d.	All conductors are correctly and securely connected and identified.	P / F / NA
e.	Armoured cables properly terminated by proper cable glands.	P / F / NA
f.	Non-sheathed cables protected by conduit, trunking, ducting or approved mechanical protective means.	P / F / NA
g.	Cables and cable containments, such as tray, ladder, ducting, trunking, conduit, etc., adequately supported.	P / F / NA
h.	Suitable cable lugs used for terminating cables, including termination at distribution board.	P / F / NA
i.	Main cables connected up with correct polarity.	P / F / NA
j.	Cables protected against mechanical damage and suitably supported.	P / F / NA
k.	All exposed metal parts including the armour effectively earthed.	P / F / NA
Remark: P / F / NA = Pass / Fail / Not Applicable		
Comment:		

Test / Checked By : REW No.: Grade (Name of CTA Representative)	Name: Ho Tung	Signature: Ho Tung	Date: 21/03/2025
Witnessed By : (Name of JEC Representative)	Name: Chung, Y	Signature:	Date: 21/03/2025
Witnessed By : (Name of GCL)	Name: Raymond Lau	Signature:	Date: 21/03/2025
Witnessed By : AMMJV (Name of)	Name: Eric Tang	Signature:	Date: 21/03/25
Witnessed By : (Name of)	Name:	Signature:	Date:
Witnessed By : (Name of)	Name:	Signature:	Date:

Gammon

CIA INTERNATIONAL AS CLEAN TUNNEL AIR

Air Purification System – HV Power Supply Units Test & Commissioning Report			
Contract No.:	HY/2019/13	RISC No.:	32054
Project:	Central Kowloon Route - Buildings, Electrical and Mechanical	Date:	21/03/2025
Location:	~~YVB / HVB~~ / KVB	Room Name:	HV Room 1
T&C Plan Ref. No:	J3883-TVS-S-06283	Page:	
Ref. Dwg. No.:			

Part 3: Inspection and Test for Electrical Installation of ESP Filter (TCP Section 4.5)

Statutory Inspection and Test for LV and HV DC Installation (Sheet 4 of 10)

Items	Description of Inspection	Test Result
D)	**Visual Inspection (ASD TCP-EE, COP Code 21A and COP Appendix 13) - Final Circuits (L.V.)**	
a.	No visible damage to impair safety	P / F / NA
b.	All non-armoured cables susceptible to damage protected with steel conduit / trunking Bushing and rubber gromment, where necessary, provided.	P / F / NA
c.	Conductor sized to suit the rating of the fuse/ MCB protecting the circuit.	P / F / NA
d.	No cable joint in final circuit.	P / F / NA
e.	All joints of metal conduits or trunking to be mechanically sound, electrically continuous and protected against corrosion.	P / F / NA
f.	All metal conduits, trunking, switch boxes and exposed metal parts effectively earth.	P / F / NA
g.	Earth fault loop impedance and polarities of every outlet checked.	P / F / NA
h.	All fuses and single/double pole switches connected to the phase conductors only with correct polarity.	P / F / NA
i.	Low voltage circuits segregated from extra low voltage circuits.	P / F / NA
j.	Exposed insulated non-sheathed cables with mechanically protected.	P / F / NA
k.	No 2-pin sockets installed. All socket outlets connected with protective conductors and live conductors terminated at correct terminals.	P / F / NA

Remark: P / F / NA = Pass / Fail / Not Applicable

Comment:

Test / Checked By : REW No.: Grade (Name of CTA Representative)	Name: Ho Tung	Signature: Ho Tung	Date: 21/03/2025
Witnessed By : (Name of JEC Representative)	Name: CHUNG	Signature:	Date: 21/03/2025
Witnessed By : (Name of GCL)	Name: Raymond Lau	Signature:	Date: 21/03/2025
Witnessed By : AMMJV (Name of)	Name: Eric Tang	Signature:	Date: 21/03/25
Witnessed By : (Name of)	Name:	Signature:	Date:
Witnessed By : (Name of)	Name:	Signature:	Date:

Gammon

CTA INTERNATIONAL AS CLEAN TUNNEL AIR

Air Purification System – HV Power Supply Units Test & Commissioning Report			
Contract No.:	HY/2019/13	RISC No.:	32054
Project:	Central Kowloon Route - Buildings, Electrical and Mechanical	Date:	21/03/2025
Location:	~~YVB / HVB~~ / KVB	Room Name:	HV Room 1
T&C Plan Ref. No:	J3883-TVS-S-06283	Page:	
Ref. Dwg. No.:			

Part 3: Inspection and Test for Electrical Installation of ESP Filter (TCP Section 4.5)

Statutory Inspection and Test for LV and HV DC Installation (Sheet 5 of 10)

Items	Description of Inspection	Test Result
E)	**Visual Inspection (ASD TCP-EE, COP Code 21A and COP Appendix 13) - Final Circuits (L.V.)**	
l.	Final circuits using 13A socket outlets in compliance with EMSD Code 6E.	P / F / NA
m.	Where circuit protective conductor is formed by the metallic cable containment enclosure, a separate protective conductor between the earthing terminal of socket outlet and its associated metal box being provided.	P / F / NA
n.	Where circuit protective conductor is not formed by the metallic cable containment enclosure, a separate protective conductor to the earthing terminal of socket outlet being provided.	P / F / NA
o.	Residual current device having a rated residual operating current not exceeding 30mA provided for all socket outlets.	P / F / NA
p.	Minimum sizes of protective conductors are provided as per requirement in EMSD COP Code 11 for limitation of protective conductor impedance.	P / F / NA
q.	Means of isolation provided for every fixed appliance.	P / F / NA

Remark: P / F / NA = Pass / Fail / Not Applicable

Comment:

Test / Checked By : REW No.: Grade (Name of CTA Representative)	Name: Ho Tung	Signature: Ho Tung	Date: 21/03/2025
Witnessed By : (Name of JEC Representative)	Name: CHUNG	Signature:	Date: 21/03/2025
Witnessed By : (Name of GCL)	Name: Raymond Lau	Signature:	Date: 21/03/2025
Witnessed By : AMMOV (Name of)	Name: Eric Tang	Signature:	Date: 21/03/25
Witnessed By : (Name of)	Name:	Signature:	Date:
Witnessed By : (Name of)	Name:	Signature:	Date:

Gammon

CTA INTERNATIONAL AS CLEAN TUNNEL AIR

Air Purification System – HV Power Supply Units Test & Commissioning Report			
Contract No.:	HY/2019/13	RISC No.:	32054
Project:	Central Kowloon Route - Buildings, Electrical and Mechanical	Date:	21/03/2025
Location:	~~YVB / HVB~~ / KVB	Room Name:	HV Room 1
T&C Plan Ref. No:	J3883-TVS-S-06283	Page:	
Ref. Dwg. No.:			

Part 3: Inspection and Test for Electrical Installation of ESP Filter (TCP Section 4.5)

Statutory Inspection and Test for LV and HV DC Installation (Sheet 6 of 10)

Items	Description of Inspection	Test Result
F) Visual Inspection (ASD TCP-EE, COP Code 21A&C and COP Appendix 13) - Earthing and Bonding (L.V.)		
a.	No visible damage to impair safety.	P / F / NA
b.	All exposed conductive parts of the wiring installation connected to the earthing terminal with appropriate protective conductor.	P / F / NA
c.	Minimum size of protective conductor used in compliance with EMSD CoP Table 11(1).	P / F / NA
d.	Protective conductor up to and including 6mm2 with green and yellow insulation sheath used throughout its length.	P / F / NA
e.	Copper links provided at joints of metallic trunking, forms part of a protective conductor	P / F / NA
f.	A warning notice 'SAFETY ELECTRICAL CONNECTION—DO NOT REMOVE and '安全接地 終端——切勿移去' provided at all main earthing and bonding connections.	P / F / NA
g.	Supplementary equipotential bonding effectively provided between exposed conductive parts and extraneous conductive parts.	P / F / NA
h.	Exposed conductive parts of fixed equipment installed outside equipotential zone effectively earthed for 0.4 sec. disconnection.	P / F / NA
i.	Exposed conductive parts of fixed equipment installed within equipotential zone effectively earthed for 5 sec. disconnection.	P / F / NA
j.	Effectiveness of the main equipotential bonding connection to the main earthing terminal.	P / F / NA
k.	Earthing conductors of adequate size.	P / F / NA
Remark: P / F / NA = Pass / Fail / Not Applicable		
Comment:		

Test / Checked By : REW No.: Grade (Name of CTA Representative)	Name: Ho Tung	Signature: Ho Tung	Date: 21/03/2025
Witnessed By : (Name of JEC Representative)	Name: Chung Tai	Signature:	Date: 21/03/2025
Witnessed By : (Name of GCL)	Name: Raymond Lau	Signature:	Date: 21/03/2025
Witnessed By : (Name of AMMOV)	Name: Eric Tang	Signature:	Date: 21/03/25
Witnessed By : (Name of)	Name:	Signature:	Date:
Witnessed By : (Name of)	Name:	Signature:	Date:

Gammon

CIA INTERNATIONAL AS

Air Purification System – HV Power Supply Units Test & Commissioning Report			
Contract No.:	HY/2019/13	RISC No.:	32054
Project:	Central Kowloon Route - Buildings, Electrical and Mechanical	Date:	21/03/2025
Location:	~~YVB / HVB~~ / KVB	Room Name:	HV Room 1
T&C Plan Ref. No:	J3883-TVS-S-06283	Page:	
Ref. Dwg. No.:			

Part 3: Inspection and Test for Electrical Installation of ESP Filter (TCP Section 4.5)

Statutory Inspection and Test for LV and HV DC Installation (Sheet 7 of 10)

Items	Description of Inspection	Test Result
G) Conductor Continuity (ASD TCP-EE, COP Code 21B(3) and (4))		
a.	All protective conductors used for equipotential bonding have been tested for continuity.	P / F / NA
b.	All final ring circuit conductors including the protective conductors have been tested for continuity.	P / F / NA
c.	Conductor continuity test results recorded in **relevant Test Form.**	P / F / NA

Remark: P / F / NA = Pass / Fail / Not Applicable

Comment:

Test / Checked By : REW No.: Grade (Name of CTA Representative)	Name: Ho Tung	Signature: Ho Tung	Date: 21/03/2025
Witnessed By : (Name of JEC Representative)	Name: CHUNG Tj	Signature: C	Date: 21/03/2025
Witnessed By : (Name of GCL)	Name: Raymond Lau	Signature:	Date: 21/03/2025
Witnessed By : AMMJV (Name of)	Name: Eric Tang	Signature:	Date: 21/03/25
Witnessed By : (Name of)	Name:	Signature:	Date:
Witnessed By : (Name of)	Name:	Signature:	Date:

Gammon

CIA INTERNATIONAL AS CLEAN TUNNEL AIR

Air Purification System – HV Power Supply Units Test & Commissioning Report			
Contract No.:	HY/2019/13	RISC No.:	32054
Project:	Central Kowloon Route - Buildings, Electrical and Mechanical	Date:	21/03/2025
Location:	~~YVB / HVB /~~ KVB	Room Name:	HV Room 1
T&C Plan Ref. No:	J3883-TVS-S-06283	Page:	
Ref. Dwg. No.:			

Part 3: Inspection and Test for Electrical Installation of ESP Filter (TCP Section 4.5)

Statutory Inspection and Test for LV and HV DC Installation (Sheet 8 of 10)

Items	Description of Inspection	Test Result
H)	**Insulation Resistance (ASD TCP-EE, COP Code 21B(5))**	
a.	The insulation resistance to earth is NOT less than 1 mega ohm.	P / F / NA
b.	The insulation resistance between phase/poles is NOT less than 1 mega ohm.	P / F / NA
c.	The insulation resistance of equipment between the exposed conductive parts and all live parts is NOT less than 1 mega ohm when tested individually and separately (EMSD COP Code 21B(5)(f)).	P / F / NA
d.	Insulation resistance test results recorded in **relevant Test Form.**	P / F / NA

Remark: P / F / NA = Pass / Fail / Not Applicable

Comment:

Test / Checked By : REW No.: Grade (Name of CTA Representative)	Name: Ho Tung	Signature: Ho Tung	Date: 21/03/2025
Witnessed By : (Name of JEC Representative)	Name: Chung	Signature:	Date: 21/03/2025
Witnessed By : (Name of GCL)	Name: Raymond Lau	Signature:	Date: 21/03/2025
Witnessed By : (Name of AMNJV)	Name: Eric Tang	Signature:	Date: 21/03/25
Witnessed By : (Name of)	Name:	Signature:	Date:
Witnessed By : (Name of)	Name:	Signature:	Date:

Gammon

CTA INTERNATIONAL AS CLEAN TUNNEL AIR

Air Purification System – HV Power Supply Units Test & Commissioning Report			
Contract No.:	HY/2019/13	RISC No.:	32054
Project:	Central Kowloon Route - Buildings, Electrical and Mechanical	Date:	21/03/2025
Location:	~~YVB / HVB~~ / KVB	Room Name:	HV Room 1
T&C Plan Ref. No:	J3883-TVS-S-06283	Page:	
Ref. Dwg. No.:			

Part 3: Inspection and Test for Electrical Installation of ESP Filter (TCP Section 4.5)

Statutory Inspection and Test for LV and HV DC Installation (Sheet 9 of 10)

Items	Description of Inspection	Test Result
I) Polarity (ASD TCP-EE, COP Code 21B(6))		
a.	All fuses and single-poles devices are connected in the phase conductors only.	P / F / NA
b.	All wiring has been correctly connected to socket outlets and, etc.	P / F / NA
c.	Polarity Check results recorded in **relevant Test Form.**	P / F / NA

Remark: P / F / NA = Pass / Fail / Not Applicable

Comment:

Test / Checked By : REW No.: Grade (Name of CTA Representative)	Name: Ho Tung	Signature: Ho Tung	Date: 21/03/2025
Witnessed By : (Name of JEC Representative)	Name: CHUNG	Signature:	Date: 21/03/2025
Witnessed By : (Name of GCL)	Name: Raymond Lau	Signature:	Date: 21/03/2025
Witnessed By : (Name of)	Name: Eric Tang	Signature:	Date: 21/03/25
Witnessed By : (Name of)	Name:	Signature:	Date:
Witnessed By : (Name of)	Name:	Signature:	Date:

Gammon

CTA INTERNATIONAL AS CLEAN TUNNEL AIR

Air Purification System – HV Power Supply Units Test & Commissioning Report			
Contract No.:	HY/2019/13	RISC No.:	32054
Project:	Central Kowloon Route - Buildings, Electrical and Mechanical	Date:	21/03/2025
Location:	~~YVB / HVB~~ / KVB	Room Name:	HV Room 1
T&C Plan Ref. No:	J3883-TVS-S-06283	Page:	
Ref. Dwg. No.:			

Part 3: Inspection and Test for Electrical Installation of ESP Filter (TCP Section 4.5)

Statutory Inspection and Test for LV and HV DC Installation (Sheet 10 of 10)

Items	Description of Inspection	Test Result
J) Functional Testing of All Devices Including Protective Devices (ASD TCP-EE, COP Code 21B(9))		
a.	Simulation tests on the operation of devices for earth fault protection are satisfactory.	P / F / NA
b.	50% of the rated tripping current shall not cause the residual current circuit breaker to open.	P / F / NA
c.	100% of the rated tripping current shall cause the residual current circuit breaker to open within 300ms or at any delay time declared by the manufacture of the devices.	P / F / NA
d.	Where the residual current circuit breaker has a rated tripping current not exceeding 30mA and has been installed to reduce the risk associated with direct contact, a residual current of 150mA should cause the circuit breaker to open within 40ms.	P / F / NA
e.	In no event should the test current be applied for a period exceeding one second	P / F / NA
f.	Breakers, moulded case circuit breakers, air circuit breakers, fused switches, switch-fuses and protective relays, etc. are satisfactory.	P / F / NA
g.	Hand operation on all items of equipment such as isolators, switch and protective relays, etc. are satisfactory.	P / F / NA
h.	Hand operation on all items of equipment such as isolators, switches and indicative devices are satisfactory.	P / F / NA
i.	Functional test of all devices including protective devices had been recorded in **relevant Test Form.**	P / F / NA

Remark: P / F / NA = Pass / Fail / Not Applicable

Comment:

Test / Checked By : REW No.: Grade (Name of CTA Representative)	Name: Ho Tung	Signature: Ho Tung	Date: 21/03/2025
Witnessed By : (Name of JEC Representative)	Name: Chung zp	Signature:	Date: 21/03/2025
Witnessed By : (Name of GCL)	Name: Raymond Lau	Signature:	Date: 21/03/2025
Witnessed By : AMTJV (Name of)	Name: Eric Tang	Signature:	Date: 27/03/25
Witnessed By : (Name of)	Name:	Signature:	Date:
Witnessed By : (Name of)	Name:	Signature:	Date:

Gammon

CTA INTERNATIONAL AS

Air Purification System – HV Power Supply Units Test & Commissioning Report			
Contract No.:	HY/2019/13	RISC No.:	31781
Project:	Central Kowloon Route - Buildings, Electrical and Mechanical	Date:	7/4/2025
Location:	~~YVB / HVB~~ / KVB	Room Name:	HV RM 1
T&C Plan Ref. No:	J3883-TVS-S-06283	Page:	
Ref. Dwg. No.:	J3883-TVS-D-02432		

Part 3: Inspection and Test for Electrical Installations (Sheet 2A of 5)

B) Earth Loop Impedance Test (TCP Section 4.5.3)

ESP HV Power Supply Cabinets Information

Cabinets ID:	KVB-APS02-ESP-PSC-01	Main Switch Rating:	80
Location:	ESP HV Switch Room 01 / 02	Supply Fed From:	KVB-DB-ESP02

Circuit No	Details of Equipment	Type of Protective Device	Rating	Earth Loop Impedance (Zs) (Ω)	Test Result
1	KVB-APS02-PSU-01 A Subassembly I1	RCBO	16A SP	0.09	P / F / NA
2	KVB-APS02-PSU-02 A Subassembly I2	RCBO	16A SP	0.1	P / F / NA
3	KVB-APS02-PSU-03 A Subassembly I3	RCBO	16A SP	0.1	P / F / NA
4	KVB-APS02-PSU-04 A Subassembly C	RCBO	16A SP	0.11	P / F / NA
5	KVB-APS02-PSU-05 B Subassembly I1	RCBO	16A SP	0.14	P / F / NA
6	KVB-APS02-PSU-06 B Subassembly I2	RCBO	16A SP	0.11	P / F / NA
7	KVB-APS02-PSU-07 B Subassembly I3	RCBO	16A SP	0.13	P / F / NA
8	KVB-APS02-PSU-08 B Subassembly C	RCBO	16A SP	0.12	P / F / NA
9	KVB-APS02-PSU-09 C Subassembly I1	RCBO	16A SP	0.18	P / F / NA
10	KVB-APS02-PSU-10 C Subassembly I2	RCBO	16A SP	0.14	P / F / NA

Remark: P / F / NA = Pass / Fail / Not Applicable
The Passing Criteria for the Max Earth Fault Loop Independence shall refer to EMSD COP.

Comment:

Test / Checked By : REW No.: Grade (Name of CTA Representative)	Name: Ho Tung	Signature:	Date: 7/4/2025
Witnessed By : (Name of JEC Representative)	Name: Lung Li	Signature:	Date: 7/4/2025
Witnessed By : (Name of GCL)	Name: Raymond Lau	Signature:	Date: 7/4/2025
Witnessed By : (Name of AMMJV)	Name: Sam Lai	Signature:	Date: 7/4/2025
Witnessed By : (Name of EMSD)	Name: WONG Cheong Shing CIE/TSC/1	Signature:	Date: - 7 APR 2025
Witnessed By : (Name of)	Name:	Signature:	Date:

Gammon

CTA INTERNATIONAL AS CLEAN TUNNEL AIR

Air Purification System – HV Power Supply Units Test & Commissioning Report			
Contract No.:	HY/2019/13	RISC No.:	3178 / ml
Project:	Central Kowloon Route - Buildings, Electrical and Mechanical	Date:	7/4/2025
Location:	~~YVB / HVB /~~ KVB	Room Name:	HV Rm 1
T&C Plan Ref. No:	J3883-TVS-S-06283	Page:	
Ref. Dwg. No.:	J3883-TVS-D-02432		

Part 3: Inspection and Test for Electrical Installations (Sheet 2B of 5)

B) Earth Loop Impedance Test (TCP Section 4.5.3)

ESP HV Power Supply Cabinets Information

Cabinets ID:	KVB-APS02-ESP-PSC-02	Main Switch Rating:	80
Location:	ESP HV Switch Room 01 / 02	Supply Fed From:	KVB-DB-ESP02

Circuit No	Details of Equipment	Type of Protective Device	Rating	Earth Loop Impedance (Zs) (Ω)	Test Result
1	KVB-APS02-PSU-11 C Subassembly I3	RCBO	16A SP	0.14	P / F / NA
2	KVB-APS02-PSU-12 C Subassembly C	RCBO	16A SP	0.1	P / F / NA
3	KVB-APS02-PSU-13 D Subassembly I1	RCBO	16A SP	0.11	P / F / NA
4	KVB-APS02-PSU-14 D Subassembly I2	RCBO	16A SP	0.14	P / F / NA
5	KVB-APS02-PSU-15 D Subassembly I3	RCBO	16A SP	0.18	P / F / NA
6	KVB-APS02-PSU-16 D Subassembly C	RCBO	16A SP	0.11	P / F / NA
7	KVB-APS02-PSU-17 E Subassembly I1	RCBO	16A SP	0.13	P / F / NA
8	KVB-APS02-PSU-18 E Subassembly I2	RCBO	16A SP	0.17	P / F / NA
9	KVB-APS02-PSU-19 E Subassembly I3	RCBO	16A SP	0.14	P / F / NA
10	KVB-APS02-PSU-20 E Subassembly C	RCBO	16A SP	0.15	P / F / NA

Remark: P / F / NA = Pass / Fail / Not Applicable
The Passing Criteria for the Max Earth Fault Loop Independence shall refer to EMSD COP.

Comment:

Test / Checked By : REW No.: Grade (Name of CTA Representative)	Name: Ho Tung	Signature:	Date: 7/4/2025
Witnessed By : (Name of JEC Representative)	Name: Lucy Li	Signature:	Date: 7/4/2025
Witnessed By : (Name of GCL)	Name: Raymond Lau	Signature:	Date: 7/4/2025
Witnessed By : (Name of AMMSU)	Name: Sam Lai	Signature:	Date: 7/4/2025
Witnessed By : (Name of EMSD)	Name: WONG Cheong Shing CIE/TSC/1	Signature:	Date: - 7 APR 2025
Witnessed By : (Name of)	Name:	Signature:	Date:

Gammon

CTA INTERNATIONAL AS

Air Purification System – HV Power Supply Units Test & Commissioning Report			
Contract No.:	HY/2019/13	RISC No.:	31781
Project:	Central Kowloon Route - Buildings, Electrical and Mechanical	Date:	7/4/2025
Location:	~~YVB~~ / HVB / KVB	Room Name:	HV RM 1
T&C Plan Ref. No:	J3883-TVS-S-06283	Page:	
Ref. Dwg. No.:	J3883-TVS-D-02432		

Part 3: Inspection and Test for Electrical Installations (Sheet 3 of 5)

C) Functional Test of Residual Current Device (RCD) (TCP Section 4.5.3)

ESP HV Power Supply Cabinets Information

Cabinets ID:	KVB-APS02-ESP-PSC-01	Main Switch Rating:	80A
Location:	ESP HV Switch Room 01 / 02	Supply Fed From:	KVB-DB-ESP02

Circuit No. or Details of Equipment	Type of Protective Device	Rating	Polarity	RCD 50% (ms)	RCD 100% (ms)	Test Result
1	RCBO	16A SP	P / F / NA	P / F / NA	36.8	P / F / NA
2	RCBO	16A SP	P / F / NA	P / F / NA	36.5	P / F / NA
3	RCBO	16A SP	P / F / NA	P / F / NA	27.6	P / F / NA
4	RCBO	16A SP	P / F / NA	P / F / NA	36.6	P / F / NA
5	RCBO	16A SP	P / F / NA	P / F / NA	26.6	P / F / NA
6	RCBO	16A SP	P / F / NA	P / F / NA	27.1	P / F / NA
7	RCBO	16A SP	P / F / NA	P / F / NA	27.2	P / F / NA
8	RCBO	16A SP	P / F / NA	P / F / NA	37.0	P / F / NA
9	RCBO	16A SP	P / F / NA	P / F / NA	36.2	P / F / NA
10	RCBO	16A SP	P / F / NA	P / F / NA	27.3	P / F / NA

Remark: P / F / NA = Pass / Fail / Not Applicable
Tripping time of RCD for 30mA leakage current shall be within 300ms.

Comment:

Test / Checked By : REW No.: Grade (Name of CTA Representative)	Name: Ho Tung	Signature:	Date: 7/4/2025
Witnessed By : (Name of JEC Representative)	Name: Lucy Li	Signature:	Date: 7/4/2025
Witnessed By : (Name of GCL)	Name: Raymond Lau	Signature:	Date: 7/4/2025
Witnessed By : (Name of AMMSV)	Name: Sam Lui	Signature:	Date: 7/4/2025
Witnessed By : (Name of WONG Cheong Shing CIE/TSC/I ZMSD)	Name: WONG Cheong Shing CIE/TSC/I ~~7 APR 2025~~	Signature:	Date: - 7 APR 2025
Witnessed By : (Name of)	Name:	Signature:	Date:

Gammon

CTA INTERNATIONAL AS CLEAN TUNNEL AIR

Air Purification System – HV Power Supply Units Test & Commissioning Report			
Contract No.:	HY/2019/13	RISC No.:	31781 rev
Project:	Central Kowloon Route - Buildings, Electrical and Mechanical	Date:	7/4/2025
Location:	~~YVB / HVB~~ / KVB	Room Name:	HV RM 1
T&C Plan Ref. No:	J3883-TVS-S-06283	Page:	
Ref. Dwg. No.:	J3883-TVS-D-02432		

Part 3: Inspection and Test for Electrical Installations (Sheet 3 of 5)

C) Functional Test of Residual Current Device (RCD) (TCP Section 4.5.3)

ESP HV Power Supply Cabinets Information

Cabinets ID:	KVB-APS02-ESP-PSC-02	Main Switch Rating:	80A
Location:	ESP HV Switch Room 01 / 02	Supply Fed From:	KVB-DB-ESP02

Circuit No. or Details of Equipment	Type of Protective Device	Rating	Polarity	RCD 50% (ms)	RCD 100% (ms)	Test Result
1	RCBO	16A SP	P / F / NA	P / F / NA	36.4	P / F / NA
2	RCBO	16A SP	P / F / NA	P / F / NA	37.6	P / F / NA
3	RCBO	16A SP	P / F / NA	P / F / NA	36.4	P / F / NA
4	RCBO	16A SP	P / F / NA	P / F / NA	26.7	P / F / NA
5	RCBO	16A SP	P / F / NA	P / F / NA	26.5	P / F / NA
6	RCBO	16A SP	P / F / NA	P / F / NA	36.8	P / F / NA
7	RCBO	16A SP	P / F / NA	P / F / NA	37.0	P / F / NA
8	RCBO	16A SP	P / F / NA	P / F / NA	36.4	P / F / NA
9	RCBO	16A SP	P / F / NA	P / F / NA	27.2	P / F / NA
10	RCBO	16A SP	P / F / NA	P / F / NA	26.8	P / F / NA

Remark: P / F / NA = Pass / Fail / Not Applicable
Tripping time of RCD for 30mA leakage current shall be within 300ms.

Comment:

Test / Checked By : REW No.: Grade (Name of CTA Representative)	Name: Ho Tung	Signature:	Date: 7/4/2025
Witnessed By : (Name of JEC Representative)	Name: Ling Li	Signature:	Date: 7/4/2025
Witnessed By : (Name of GCL)	Name: Raymond Law	Signature:	Date: 7/4/2025
Witnessed By : (Name of AMMSV)	Name: Sam Lau	Signature:	Date: 7/4/2025
Witnessed By : (Name of ZMOD)	Name: WONG Cheong Shing CIE/TSC/1	Signature:	Date: - 7 APR 2025
Witnessed By : (Name of)	Name:	Signature:	Date:

Gammon

CTA INTERNATIONAL AS CLEAN TUNNEL AIR

Air Purification System – HV Power Supply Units Test & Commissioning Report			
Contract No.:	HY/2019/13	RISC No.:	31781
Project:	Central Kowloon Route - Buildings, Electrical and Mechanical	Date:	7/4/2025
Location:	~~YVB / HVB~~ / KVB	Room Name:	HV RM 1
T&C Plan Ref. No:	J3883-TVS-S-06283	Page:	
Ref. Dwg. No.:	J3883-TVS-D-02432		

Part 3: Inspection and Test for Electrical Installations (Sheet 4 of 5)

D) Functional Test and Circuitry Check (TCP Section 4.5.3)

ESP HV Power Supply Cabinets Information

Cabinets ID:	KVB-APSR-ESP-PSC-01	Main Switch Rating:	80A
Location:	ESP HV Switch Room 01 / 02	Supply Fed From:	KVB-DB-ESP02

Circuit No. or Details of Equipment	Type of Protective Device	Rating	Isolator	MCB	RCD Test Button	Circuitry Check
1	RCBO	16A SP	P / F / NA	P / F / NA	P / F / NA	P / F / NA
2	RCBO	16A SP	P / F / NA	P / F / NA	P / F / NA	P / F / NA
3	RCBO	16A SP	P / F / NA	P / F / NA	P / F / NA	P / F / NA
4	RCBO	16A SP	P / F / NA	P / F / NA	P / F / NA	P / F / NA
5	RCBO	16A SP	P / F / NA	P / F / NA	P / F / NA	P / F / NA
6	RCBO	16A SP	P / F / NA	P / F / NA	P / F / NA	P / F / NA
7	RCBO	16A SP	P / F / NA	P / F / NA	P / F / NA	P / F / NA
8	RCBO	16A SP	P / F / NA	P / F / NA	P / F / NA	P / F / NA
9	RCBO	16A SP	P / F / NA	P / F / NA	P / F / NA	P / F / NA
10	RCBO	16A SP	P / F / NA	P / F / NA	P / F / NA	P / F / NA
11	RCBO	16A SP	P / F / NA	P / F / NA	P / F / NA	P / F / NA

Remark: P / F / NA = Pass / Fail / Not Applicable

Comment:

Test / Checked By : REW No.: Grade (Name of CTA Representative)	Name: Ho Tung	Signature:	Date: 7/4/2025
Witnessed By : (Name of JEC Representative)	Name: Lucy Li	Signature:	Date: 7/4/2025
Witnessed By : (Name of GCL)	Name: Raymond Lau	Signature:	Date: 7/4/2025
Witnessed By : (Name of AMTSL)	Name: Sam Lai	Signature:	Date: 7/4/2025
Witnessed By : (Name of ZMSD)	Name: WONG Cheong Shing CIE/TSC/1	Signature:	Date: - 7 APR 2025
Witnessed By : (Name of)	Name:	Signature:	Date:

Gammon

CTA INTERNATIONAL AS CLEAN TUNNEL AIR

Air Purification System – HV Power Supply Units Test & Commissioning Report			
Contract No.:	HY/2019/13	RISC No.:	31781
Project:	Central Kowloon Route - Buildings, Electrical and Mechanical	Date:	7/4/2025
Location:	~~YVB~~ / HVB / KVB	Room Name:	HV Rm 1
T&C Plan Ref. No:	J3883-TVS-S-06283	Page:	
Ref. Dwg. No.:	J3883-TVS-D-02432		

Part 3: Inspection and Test for Electrical Installations (Sheet 4 of 5)

D) Functional Test and Circuitry Check (TCP Section 4.5.3)

ESP HV Power Supply Cabinets Information

Cabinets ID:	KVB-APS02-ESP-PSC-02	Main Switch Rating:	80A
Location:	ESP HV Switch Room 01 / 02	Supply Fed From:	KVB-DB-ESP02

Circuit No. or Details of Equipment	Type of Protective Device	Rating	Isolator	MCB	RCD Test Button	Circuitry Check
1	RCBO	16A SP	P / F / NA	P / F / NA	P / F / NA	P / F / NA
2	RCBO	16A SP	P / F / NA	P / F / NA	P / F / NA	P / F / NA
3	RCBO	16A SP	P / F / NA	P / F / NA	P / F / NA	P / F / NA
4	RCBO	16A SP	P / F / NA	P / F / NA	P / F / NA	P / F / NA
5	RCBO	16A SP	P / F / NA	P / F / NA	P / F / NA	P / F / NA
6	RCBO	16A SP	P / F / NA	P / F / NA	P / F / NA	P / F / NA
7	RCBO	16A SP	P / F / NA	P / F / NA	P / F / NA	P / F / NA
8	RCBO	16A SP	P / F / NA	P / F / NA	P / F / NA	P / F / NA
9	RCBO	16A SP	P / F / NA	P / F / NA	P / F / NA	P / F / NA
10	RCBO	16A SP	P / F / NA	P / F / NA	P / F / NA	P / F / NA
11	RCBO	16A SP	P / F / NA	P / F / NA	P / F / NA	P / F / NA

Remark: P / F / NA = Pass / Fail / Not Applicable

Comment:

Test / Checked By : REW No.: Grade (Name of CTA Representative)	Name: HOTus	Signature:	Date: 7/4/2025
Witnessed By : (Name of JEC Representative)	Name: Lucy Li	Signature:	Date: 7/4/2025
Witnessed By : (Name of GCL)	Name: Raymond Lau	Signature:	Date: 7/4/2025
Witnessed By : (Name of AMASU)	Name: Sam Lui	Signature:	Date: 7/4/2025
Witnessed By : (Name of EMSD)	Name: WONG Cheong Shing CIE/TSC/1	Signature:	Date: - 7 APR 2025
Witnessed By : (Name of)	Name:	Signature:	Date:

Gammon

CTA INTERNATIONAL AS

Air Purification System – HV Power Supply Units Test & Commissioning Report			
Contract No.:	HY/2019/13	RISC No.:	3178 / me
Project:	Central Kowloon Route - Buildings, Electrical and Mechanical	Date:	7/4/2025
Location:	~~YVB / HVB~~ / KVB	Room Name:	HV RM 1
T&C Plan Ref. No:	J3883-TVS-S-06283	Page:	
Ref. Dwg. No.:	J3883-TVS-D-02432		

Part 3: Inspection and Test for Electrical Installations (Sheet 2A of 5)

B) Earth Loop Impedance Test (TCP Section 4.5.3)

ESP HV Power Supply Cabinets Information

Cabinets ID:	KVB-APS03-ESP-PSC-01	Main Switch Rating:	80
Location:	ESP HV Switch Room 01 / 02	Supply Fed From:	KVB-DB-ESP02

Circuit No	Details of Equipment	Type of Protective Device	Rating	Earth Loop Impedance (Zs) (Ω)	Test Result
1	KVB-APS03-PSU-01 A Subassembly I1	RCBO	16A SP	0.13	P / F / NA
2	KVB-APS03-PSU-02 A Subassembly I2	RCBO	16A SP	0.13	P / F / NA
3	KVB-APS03-PSU-03 A Subassembly I3	RCBO	16A SP	0.14	P / F / NA
4	KVB-APS03-PSU-04 A Subassembly C	RCBO	16A SP	0.16	P / F / NA
5	KVB-APS03-PSU-05 B Subassembly I1	RCBO	16A SP	0.13	P / F / NA
6	KVB-APS03-PSU-06 B Subassembly I2	RCBO	16A SP	0.16	P / F / NA
7	KVB-APS03-PSU-07 B Subassembly I3	RCBO	16A SP	0.14	P / F / NA
8	KVB-APS03-PSU-08 B Subassembly C	RCBO	16A SP	0.17	P / F / NA
9	KVB-APS03-PSU-09 C Subassembly I1	RCBO	16A SP	0.18	P / F / NA
10	KVB-APS03-PSU-10 C Subassembly I2	RCBO	16A SP	0.17	P / F / NA

Remark: P / F / NA = Pass / Fail / Not Applicable
The Passing Criteria for the Max Earth Fault Loop Independence shall refer to EMSD COP.

Comment:

Test / Checked By : REW No.: Grade (Name of CTA Representative)	Name: Ho Tung	Signature:	Date: 7/4/2025
Witnessed By : (Name of JEC Representative)	Name: Lucy Li	Signature:	Date: 7/4/2025
Witnessed By : (Name of GCL)	Name: Raymond Lau	Signature:	Date: 7/4/2025
Witnessed By : (Name of AMMSV)	Name: Sam Lui	Signature:	Date: 7/4/2025
Witnessed By : (Name of EMSD)	Name: WONG Cheong Shing CIE/TSC/1	Signature:	Date: - 7 APR 2025
Witnessed By : (Name of)	Name:	Signature:	Date:

Gammon

CTA INTERNATIONAL AS

Air Purification System – HV Power Supply Units Test & Commissioning Report			
Contract No.:	HY/2019/13	RISC No.:	31781
Project:	Central Kowloon Route - Buildings, Electrical and Mechanical	Date:	7/4/2025
Location:	~~KVB / HVB~~ KVB	Room Name:	HV Rm 1
T&C Plan Ref. No:	J3883-TVS-S-06283	Page:	
Ref. Dwg. No.:	J3883-TVS-D-02432		

Part 3: Inspection and Test for Electrical Installations (Sheet 2B of 5)

B) Earth Loop Impedance Test (TCP Section 4.5.3)

ESP HV Power Supply Cabinets Information

Cabinets ID:	KVB-APS03-ESP-PSC-02	Main Switch Rating:	80
Location:	ESP HV Switch Room 01 / 02	Supply Fed From:	KVB-DB-ESP02

Circuit No	Details of Equipment	Type of Protective Device	Rating	Earth Loop Impedance (Zs) (Ω)	Test Result
1	KVB-APS03-PSU-11 C Subassembly I3	RCBO	16A SP	0.16	P / F / NA
2	KVB-APS03-PSU-12 C Subassembly C	RCBO	16A SP	0.12	P / F / NA
3	KVB-APS03-PSU-13 D Subassembly I1	RCBO	16A SP	0.14	P / F / NA
4	KVB-APS03-PSU-14 D Subassembly I2	RCBO	16A SP	0.14	P / F / NA
5	KVB-APS03-PSU-15 D Subassembly I3	RCBO	16A SP	0.16	P / F / NA
6	KVB-APS03-PSU-16 D Subassembly C	RCBO	16A SP	0.17	P / F / NA
7	KVB-APS03-PSU-17 E Subassembly I1	RCBO	16A SP	0.15	P / F / NA
8	KVB-APS03-PSU-18 E Subassembly I2	RCBO	16A SP	0.15	P / F / NA
9	KVB-APS03-PSU-19 E Subassembly I3	RCBO	16A SP	0.16	P / F / NA
10	KVB-APS03-PSU-20 E Subassembly C	RCBO	16A SP	0.17	P / F / NA

Remark: P / F / NA = Pass / Fail / Not Applicable
The Passing Criteria for the Max Earth Fault Loop Independence shall refer to EMSD COP.

Comment:

Test / Checked By : REW No.: Grade (Name of CTA Representative)	Name: Ho Tung	Signature:	Date: 7/4/2025
Witnessed By : (Name of JEC Representative)	Name: Lucy Li	Signature:	Date: 7/4/2025
Witnessed By : (Name of GCL)	Name: Raymond Lau	Signature:	Date: 7/4/2025
Witnessed By : (Name of AMMJV)	Name: Sam Lau	Signature:	Date: 7/4/2025
Witnessed By : (Name of EMSD)	Name: WONG Cheong Shing CIE/TSC/1	Signature:	Date: - 7 APR 2025
Witnessed By : (Name of)	Name:	Signature:	Date:

Gammon

CTA INTERNATIONAL AS

Air Purification System – HV Power Supply Units Test & Commissioning Report			
Contract No.:	HY/2019/13	RISC No.:	31781
Project:	Central Kowloon Route - Buildings, Electrical and Mechanical	Date:	7/4/2025
Location:	~~YVB~~ / HVB / KVB	Room Name:	HV RM 1
T&C Plan Ref. No:	J3883-TVS-S-06283	Page:	
Ref. Dwg. No.:	J3883-TVS-D-02432		

Part 3: Inspection and Test for Electrical Installations (Sheet 3 of 5)

C) Functional Test of Residual Current Device (RCD) (TCP Section 4.5.3)

ESP HV Power Supply Cabinets Information

Cabinets ID:	KVB-APS03-ESP-PSC-01	Main Switch Rating:	80A
Location:	ESP HV Switch Room ~~01~~ / 02	Supply Fed From:	KVB-DB-ESP02

Circuit No. or Details of Equipment	Type of Protective Device	Rating	Polarity	RCD 50% (ms)	RCD 100% (ms)	Test Result
1	RCBO	16A SP	P / F / NA	P / F / NA	36.3	P / F / NA
2	RCBO	16A SP	P / F / NA	P / F / NA	36.2	P / F / NA
3	RCBO	16A SP	P / F / NA	P / F / NA	36.1	P / F / NA
4	RCBO	16A SP	P / F / NA	P / F / NA	26.9	P / F / NA
5	RCBO	16A SP	P / F / NA	P / F / NA	36.6	P / F / NA
6	RCBO	16A SP	P / F / NA	P / F / NA	27.1	P / F / NA
7	RCBO	16A SP	P / F / NA	P / F / NA	27.4	P / F / NA
8	RCBO	16A SP	P / F / NA	P / F / NA	36.3	P / F / NA
9	RCBO	16A SP	P / F / NA	P / F / NA	36.2	P / F / NA
10	RCBO	16A SP	P / F / NA	P / F / NA	36.8	P / F / NA

Remark: P / F / NA = Pass / Fail / Not Applicable
Tripping time of RCD for 30mA leakage current shall be within 300ms.

Comment:

Test / Checked By : REW No.: Grade (Name of CTA Representative)	Name: Ho Tung	Signature:	Date: 7/4/2025
Witnessed By : (Name of JEC Representative)	Name: Lucy Li	Signature:	Date: 7/4/2025
Witnessed By : (Name of GCL)	Name: Raymond Lau	Signature:	Date: 7/4/2025
Witnessed By : (Name of AMMSU)	Name: Sam Lai	Signature:	Date: 7/4/2025
Witnessed By : (Name of EMSD)	Name: WONG Cheong Shing CIE/TSC/1	Signature:	Date: - 7 APR 2025
Witnessed By : (Name of)	Name:	Signature:	Date:

Gammon

CTA INTERNATIONAL AS CLEAN TUNNEL AIR

Air Purification System – HV Power Supply Units Test & Commissioning Report			
Contract No.:	HY/2019/13	RISC No.:	31781
Project:	Central Kowloon Route - Buildings, Electrical and Mechanical	Date:	7/4/2025
Location:	~~YVB / HVB~~ / KVB	Room Name:	HV RM 1
T&C Plan Ref. No:	J3883-TVS-S-06283	Page:	
Ref. Dwg. No.:	J3883-TVS-D-02432		

Part 3: Inspection and Test for Electrical Installations (Sheet 3 of 5)

C) Functional Test of Residual Current Device (RCD) (TCP Section 4.5.3)

ESP HV Power Supply Cabinets Information

Cabinets ID:	KVB-APS03-ESP-PSC-02	Main Switch Rating:	80A
Location:	ESP HV Switch Room 01 / 02	Supply Fed From:	KVB-DB-ESP02

Circuit No. or Details of Equipment	Type of Protective Device	Rating	Polarity	RCD 50% (ms)	RCD 100% (ms)	Test Result
1	RCBO	16A SP	P / F / NA	P / F / NA	27.5	P / F / NA
2	RCBO	16A SP	P / F / NA	P / F / NA	37.7	P / F / NA
3	RCBO	16A SP	P / F / NA	P / F / NA	36.7	P / F / NA
4	RCBO	16A SP	P / F / NA	P / F / NA	26.3	P / F / NA
5	RCBO	16A SP	P / F / NA	P / F / NA	27.3	P / F / NA
6	RCBO	16A SP	P / F / NA	P / F / NA	27.1	P / F / NA
7	RCBO	16A SP	P / F / NA	P / F / NA	26.8	P / F / NA
8	RCBO	16A SP	P / F / NA	P / F / NA	37.2	P / F / NA
9	RCBO	16A SP	P / F / NA	P / F / NA	27.0	P / F / NA
10	RCBO	16A SP	P / F / NA	P / F / NA	27.0	P / F / NA

Remark: P / F / NA = Pass / Fail / Not Applicable
Tripping time of RCD for 30mA leakage current shall be within 300ms.

Comment:

Test / Checked By : REW No.: Grade (Name of CTA Representative)	Name: Ho Tung	Signature:	Date: 7/4/2025
Witnessed By : (Name of JEC Representative)	Name: Lucy Li	Signature:	Date: 7/4/2025
Witnessed By : (Name of GCL)	Name: Raymond Law	Signature:	Date: 7/4/2025
Witnessed By : (Name of AMMSE)	Name: Sam Lai	Signature:	Date: 7/4/2025
Witnessed By : (Name of EMSD)	Name: WONG Cheong Shing CIE/TSC/1	Signature:	Date: - 7 APR 2025
Witnessed By : (Name of)	Name:	Signature:	Date:

Gammon

CIA INTERNATIONAL AS CLEAN TUNNEL A/S

Air Purification System – HV Power Supply Units Test & Commissioning Report			
Contract No.:	HY/2019/13	RISC No.:	31781
Project:	Central Kowloon Route - Buildings, Electrical and Mechanical	Date:	7/4/2025
Location:	~~YVB / HVB~~ / KVB	Room Name:	HV RM 1
T&C Plan Ref. No:	J3883-TVS-S-06283	Page:	
Ref. Dwg. No.:	J3883-TVS-D-02432		

Part 3: Inspection and Test for Electrical Installations (Sheet 4 of 5)

D) Functional Test and Circuitry Check (TCP Section 4.5.3)

ESP HV Power Supply Cabinets Information

Cabinets ID:	KVB-APS03-ESP-PSC-01	Main Switch Rating:	80A
Location:	ESP HV Switch Room 01 / 02	Supply Fed From:	KVB-DB-ESP02

Circuit No. or Details of Equipment	Type of Protective Device	Rating	Isolator	MCB	RCD Test Button	Circuitry Check
1	RCBO	16A SP	P / F / NA	P / F / NA	P / F / NA	P / F / NA
2	RCBO	16A SP	P / F / NA	P / F / NA	P / F / NA	P / F / NA
3	RCBO	16A SP	P / F / NA	P / F / NA	P / F / NA	P / F / NA
4	RCBO	16A SP	P / F / NA	P / F / NA	P / F / NA	P / F / NA
5	RCBO	16A SP	P / F / NA	P / F / NA	P / F / NA	P / F / NA
6	RCBO	16A SP	P / F / NA	P / F / NA	P / F / NA	P / F / NA
7	RCBO	16A SP	P / F / NA	P / F / NA	P / F / NA	P / F / NA
8	RCBO	16A SP	P / F / NA	P / F / NA	P / F / NA	P / F / NA
9	RCBO	16A SP	P / F / NA	P / F / NA	P / F / NA	P / F / NA
10	RCBO	16A SP	P / F / NA	P / F / NA	P / F / NA	P / F / NA
11	RCBO	16A SP	P / F / NA	P / F / NA	P / F / NA	P / F / NA

Remark: P / F / NA = Pass / Fail / Not Applicable

Comment:

Test / Checked By : REW No.: Grade (Name of CTA Representative)	Name: Ho Tung	Signature:	Date: 7/4/2025
Witnessed By : (Name of JEC Representative)	Name: Lucy Li	Signature:	Date: 7/4/2025
Witnessed By : (Name of GCL)	Name: Bernard Lau	Signature:	Date: 7/4/2025
Witnessed By : (Name of AMMSL)	Name: Pan Lai	Signature:	Date: 7/4/2025
Witnessed By : (Name of ZMSD)	Name: WONG Cheong Shing CIE/TSC/1	Signature:	Date: - 7 APR 2025
Witnessed By : (Name of)	Name:	Signature:	Date:

Gammon

CTA INTERNATIONAL AS

Air Purification System – HV Power Supply Units Test & Commissioning Report			
Contract No.:	HY/2019/13	RISC No.:	3178
Project:	Central Kowloon Route - Buildings, Electrical and Mechanical	Date:	7/4/2025
Location:	~~YVB / HVB~~ / KVB	Room Name:	HV RM 1
T&C Plan Ref. No:	J3883-TVS-S-06283	Page:	
Ref. Dwg. No.:	J3883-TVS-D-02432		

Part 3: Inspection and Test for Electrical Installations (Sheet 4 of 5)

D) Functional Test and Circuitry Check (TCP Section 4.5.3)

ESP HV Power Supply Cabinets Information

Cabinets ID:	KVB-APS03-ESP-PSC-02	Main Switch Rating:	80A
Location:	ESP HV Switch Room 01 / 02	Supply Fed From:	KVB-DB-ESP02

Circuit No. or Details of Equipment	Type of Protective Device	Rating	Isolator	MCB	RCD Test Button	Circuitry Check
1	RCBO	16A SP	P / F / NA	P / F / NA	P / F / NA	P / F / NA
2	RCBO	16A SP	P / F / NA	P / F / NA	P / F / NA	P / F / NA
3	RCBO	16A SP	P / F / NA	P / F / NA	P / F / NA	P / F / NA
4	RCBO	16A SP	P / F / NA	P / F / NA	P / F / NA	P / F / NA
5	RCBO	16A SP	P / F / NA	P / F / NA	P / F / NA	P / F / NA
6	RCBO	16A SP	P / F / NA	P / F / NA	P / F / NA	P / F / NA
7	RCBO	16A SP	P / F / NA	P / F / NA	P / F / NA	P / F / NA
8	RCBO	16A SP	P / F / NA	P / F / NA	P / F / NA	P / F / NA
9	RCBO	16A SP	P / F / NA	P / F / NA	P / F / NA	P / F / NA
10	RCBO	16A SP	P / F / NA	P / F / NA	P / F / NA	P / F / NA
11	RCBO	16A SP	P / F / NA	P / F / NA	P / F / NA	P / F / NA

Remark: P / F / NA = Pass / Fail / Not Applicable

Comment:

Test / Checked By : REW No.: Grade (Name of CTA Representative)	Name: Ho Tung	Signature:	Date: 7/4/2025
Witnessed By : (Name of JEC Representative)	Name: Lucy Li	Signature:	Date: 7/4/2025
Witnessed By : (Name of GCL)	Name: Raymond Law	Signature:	Date: 7/4/2025
Witnessed By : (Name of AMMJV)	Name: Sam Lau	Signature:	Date: 7/4/2025
Witnessed By : (Name of ZMSD)	Name: WONG Cheong Shing CIE/TSC/1	Signature:	Date: - 7 APR 2025
Witnessed By : (Name of)	Name:	Signature:	Date:

Gammon

CTA INTERNATIONAL AS CLEAN TUNNEL AIR

Air Purification System – HV Power Supply Units Test & Commissioning Report			
Contract No.:	HY/2019/13	RISC No.:	33640
Project:	Central Kowloon Route - Buildings, Electrical and Mechanical	Date:	24/04/2025
Location:	~~YVB / HVB~~ / KVB	Room Name:	Plenum 3
T&C Plan Ref. No:		Page:	
Ref. Dwg. No.:			

Part 4 : Functional and Performance Tests for HV Power Supply Units (Sheet 1 of 5)

A) Maximum Voltage Withstand Test for ESP Cell (TCP Section 4.6.1)

From:	ESP HV Switch Room 01 / 02	To:	APS Plenum No.01 / 02 / 03 Sub-assembly A / B / C / D / E

Step 1 & 3 - Insulation Resistance Test before and after the Maximum Voltage Withstand Test

Items	Circuit No. or Details of Equipment	Insulation Resistance (MΩ)	
		Before Max. Withstand Tests	After Max. Withstand Tests
1	KVB-APS3-ESP-PSC-01 (1st Col. Ionizer to Earth)	338 (Lower 3 ESP Cell) / 341 (Upper 3 ESP Cell)	331 (Lower 3 ESP Cell) / 399 (Upper 3 ESP Cell)
2	KVB-APS3-ESP-PSC-01 (2nd Col. Ionizer to Earth)	235 (Lower 3 ESP Cell) / 193 (Upper 3 ESP Cell)	246 (Lower 3 ESP Cell) / 178 (Upper 3 ESP Cell)
3	KVB-APS3-ESP-PSC-01 (3rd Col. Ionizer to Earth)	391 (Lower 3 ESP Cell) / 369 (Upper 3 ESP Cell)	418 (Lower 3 ESP Cell) / 340. (Upper 3 ESP Cell)
4	KVB-APS3-ESP-PSC-01 (1st to 3rd Col. Collector the Earth)	45.5 (1st Col.) / 42.8 (2nd Col.) / 54.1 (3rd Col.)	62.8 (1st Col.) / 56.3 (2nd Col.) / 99.9 (3rd Col.)

Step 2 - Maximum Voltage Withstand Test

Items	Test Voltage (kV DC)	Duration (min)	Measured Voltage (kV DC) Lower	Measured Voltage (kV DC) Upper	Test Result
1	20 (Ionizer)	1	20.0	20.0	P / F / NA
2	20 (Ionizer)		20.1	19.8	P / F / NA
3	20 (Ionizer)		20.3	19.8	P / F / NA
4	8 (Collector)	1	7.3		P / F / NA

B) List of Testing Equipment / Instruments

Type	Model	Serial No	Calibration Cert. No	Date of Cert.
HV Insulation Tester	AR3125	6819355	KS2525021278000 1	2025/02/25
HV Probe Meter	HVP-40DM	20240221	ACZ20250303080 2	2025/03/03

Remark: P / F / NA = Pass / Fail / Not Applicable
The passing criteria for the test is passing the insulation test after for maximum voltage withstand test.
The insulation resistance is over 1000MOhm (*) for HV DC Cable and 30MOhm for ESP Cell

Comment:

Test / Checked By : REW No.: Grade (Name of CTA Representative)	Name: Ho Tung	Signature:	Date: 24/04/2025
Witnessed By : (Name of JEC Representative)	Name: John Chan	Signature:	Date: 24/04/2025
Witnessed By : (Name of GCL)	Name: SHAM TZE YUEN	Signature:	Date: 24/4/25
Witnessed By : (Name of AMMSL)	Name: Samlo	Signature:	Date: 24/4/2025
Witnessed By : (Name of EMSD)	Name: WONG Cheong Shing CIE/TSC/1	Signature:	Date: 24 APR 2025
Witnessed By : (Name of)	Name:	Signature:	Date:

Gammon

CTA INTERNATIONAL AS CLEAN TUNNEL AIR

Air Purification System – HV Power Supply Units Test & Commissioning Report			
Contract No.:	HY/2019/13	RISC No.:	33640
Project:	Central Kowloon Route - Buildings, Electrical and Mechanical	Date:	24/04/2025
Location:	YVB / HVB / KVB	Room Name:	Plenum 3
T&C Plan Ref. No:		Page:	
Ref. Dwg. No.:			

Part 4 : Functional and Performance Tests for HV Power Supply Units (Sheet 1 of 5)

A) Maximum Voltage Withstand Test for ESP Cell (TCP Section 4.6.1)

From:	ESP HV Switch Room 01 / 02	To:	APS Plenum No.01 / 02 / 03 Sub-assembly A / B / C / D / E

Step 1 & 3 - Insulation Resistance Test before and after the Maximum Voltage Withstand Test

Items	Circuit No. or Details of Equipment	Insulation Resistance (MΩ)	
		Before Max. Withstand Tests	After Max. Withstand Tests
1	01 (1st Col. Ionizer to Earth)	275 (Lower 3 ESP Cell) / 258 (Upper 3 ESP Cell)	223 (Lower 3 ESP Cell) / 3.2G (Upper 3 ESP Cell)
2	01 (2nd Col. Ionizer to Earth)	152 (Lower 3 ESP Cell) / 315 (Upper 3 ESP Cell)	162 (Lower 3 ESP Cell) / 1.82G (Upper 3 ESP Cell)
3	01 (3rd Col. Ionizer to Earth)	479 (Lower 3 ESP Cell) / 76.6 (Upper 3 ESP Cell)	320 (Lower 3 ESP Cell) / 113 (Upper 3 ESP Cell)
4	01 (1st to 3rd Col. Collector the Earth)	61.9 (1st Col.) / 54.1 (2nd Col.) / 101.1 (3rd Col.)	84.2 (1st Col.) / 123 (2nd Col.) / 120 (3rd Col.)

Step 2 - Maximum Voltage Withstand Test

Items	Test Voltage (kV DC)	Duration (min)	Measured Voltage (kV DC) lows	Measured Voltage (kV DC) Upper	Test Result
1	20 (Ionizer)	1	20.3	19.8	P / F / NA
2	20 (Ionizer)		20.2	19.6	P / F / NA
3	20 (Ionizer)		20.2	19.9	P / F / NA
4	8 (Collector)	1		7.4	P / F / NA

B) List of Testing Equipment / Instruments

Type	Model	Serial No	Calibration Cert. No	Date of Cert.
HV Insulation Tester	AR3125	6819355	KS2525021278D001	2025/02/25
HV Probe Meter	HVP-40DM	20240221	AC220250303080 2	2025/03/03

Remark: P / F / NA = Pass / Fail / Not Applicable
The passing criteria for the test is passing the insulation test after for maximum voltage withstand test.
The insulation resistance is over 1000MOhm (*) for HV DC Cable and 30MOhm for ESP Cell

Comment:

	Name:	Signature:	Date:
Test / Checked By : REW No.: Grade (Name of CTA Representative)	Ho Tung		24/04/2025
Witnessed By : (Name of JEC Representative)	John Chan		24/4/2025
Witnessed By : (Name of GEL)	SHAN Pak Yuen		24/4/25
Witnessed By : (Name of AMMSC)	Sam Lui		24/4/2025
Witnessed By : (Name of ZMSD)	WONG Cheong Shing CIE/TSC/1		24 APR 2025
Witnessed By : (Name of)			

Gammon

CTA INTERNATIONAL AS

Air Purification System – HV Power Supply Units Test & Commissioning Report			
Contract No.:	HY/2019/13	RISC No.:	33640
Project:	Central Kowloon Route - Buildings, Electrical and Mechanical	Date:	24/04/2025
Location:	YVB / HVB / KVB	Room Name:	Plenum 3
T&C Plan Ref. No:		Page:	
Ref. Dwg. No.:			

Part 4 : Functional and Performance Tests for HV Power Supply Units (Sheet 1 of 5)

A) Maximum Voltage Withstand Test for ESP Cell (TCP Section 4.6.1)

From:	ESP HV Switch Room 01 / 02	To:	APS Plenum No.01 / 02 / 03 Sub-assembly A / B / C / D / E

Step 1 & 3 - Insulation Resistance Test before and after the Maximum Voltage Withstand Test

Items	Circuit No. or Details of Equipment	Insulation Resistance (MΩ) Before Max. Withstand Tests	Insulation Resistance (MΩ) After Max. Withstand Tests
1	01 (1st Col. Ionizer to Earth)	345 (Lower 3 ESP Cell) / 479 (Upper 3 ESP Cell)	371 (Lower 3 ESP Cell) / 494 (Upper 3 ESP Cell)
2	01 (2nd Col. Ionizer to Earth)	301 (Lower 3 ESP Cell) / 294 (Upper 3 ESP Cell)	354 (Lower 3 ESP Cell) / 341 (Upper 3 ESP Cell)
3	02 (3rd Col. Ionizer to Earth)	220 (Lower 3 ESP Cell) / 474 (Upper 3 ESP Cell)	224 (Lower 3 ESP Cell) / 479 (Upper 3 ESP Cell)
4	02 (1st to 3rd Col. Collector the Earth)	126 (1st Col.) / 155 (2nd Col.) / 74.1 (3rd Col.)	128 (1st Col.) / 158 (2nd Col.) / 112 (3rd Col.)

Step 2 - Maximum Voltage Withstand Test

Items	Test Voltage (kV DC)	Duration (min)	Measured Voltage (kV DC) Lower	Measured Voltage (kV DC) Upper	Test Result
1	20 (Ionizer)	1	20.3	20.0	(P) / F / NA
2	20 (Ionizer)		20.1	19.9	(P) / F / NA
3	20 (Ionizer)		20.2	19.8	(P) / F / NA
4	8 (Collector)	1		7.4	(P) / F / NA

B) List of Testing Equipment / Instruments

	Type	Model	Serial No	Calibration Cert. No	Date of Cert.
HN	Insulation Tester	AR3125	6819355	KS2525021278D001	2025/02/25
HN	Probe Meter	HVP-40DM	20240221	AC2202503030802	2025/03/03

Remark: P / F / NA = Pass / Fail / Not Applicable
The passing criteria for the test is passing the insulation test after for maximum voltage withstand test.
The insulation resistance is over 1000MOhm (*) for HV DC Cable and 30MOhm for ESP Cell

Comment:

	Name:	Signature:	Date:
Test / Checked By : REW No.: Grade (Name of CTA Representative)	Ho Tung		24/04/2025
Witnessed By : (Name of JEC Representative)	John Chan		24/4/2025
Witnessed By : (Name of GCL)	SHAM TSE YUEN		24/4/25
Witnessed By : (Name of AMASU)	San Li		24/4/25
Witnessed By : (Name of ZMSD)	WONG Cheong Shing CIE/TSC/1		24 APR 2025
Witnessed By : (Name of)			

Gammon

CTA INTERNATIONAL AS CLEAN TUNNEL AIR

Air Purification System – HV Power Supply Units Test & Commissioning Report			
Contract No.:	HY/2019/13	RISC No.:	33640
Project:	Central Kowloon Route - Buildings, Electrical and Mechanical	Date:	24/04/2025
Location:	YVB / HVB / KVB	Room Name:	~~24/04/2025~~ Plenum 3
T&C Plan Ref. No:		Page:	
Ref. Dwg. No.:			

Part 4 : Functional and Performance Tests for HV Power Supply Units (Sheet 1 of 5)

A) Maximum Voltage Withstand Test for ESP Cell (TCP Section 4.6.1)

From:	ESP HV Switch Room 01 / 02	To:	APS Plenum No.01 / 02 / 03 Sub-assembly A / B / C / D / E

Step 1 & 3 - Insulation Resistance Test before and after the Maximum Voltage Withstand Test

Items	Circuit No. or Details of Equipment	Insulation Resistance (MΩ)	
		Before Max. Withstand Tests	After Max. Withstand Tests
1	02 (1st Col. Ionizer to Earth)	284 (Lower 3 ESP Cell) / 216 (Upper 3 ESP Cell)	423 (Lower 3 ESP Cell) / 204 (Upper 3 ESP Cell)
2	02 (2nd Col. Ionizer to Earth)	418 (Lower 3 ESP Cell) / 292 (Upper 3 ESP Cell)	486 (Lower 3 ESP Cell) / 293 (Upper 3 ESP Cell)
3	02 (3rd Col. Ionizer to Earth)	211 (Lower 3 ESP Cell) / 298 (Upper 3 ESP Cell)	231 (Lower 3 ESP Cell) / 353 (Upper 3 ESP Cell)
4	02 (1st to 3rd Col. Collector the Earth)	54 (1st Col.) / 53.9 (2nd Col.) / 91.3 (3rd Col.)	82.6 (1st Col.) / 60.3 (2nd Col.) / 122 (3rd Col.)

Step 2 - Maximum Voltage Withstand Test

Items	Test Voltage (kV DC)	Duration (min)	Measured Voltage (kV DC)		Test Result
1	20 (Ionizer)	1	20.3	20.0	P / F / NA
2	20 (Ionizer)		20.2	19.9	P / F / NA
3	20 (Ionizer)		20.3	19.8	P / F / NA
4	8 (Collector)	1		7.4	P / F / NA

B) List of Testing Equipment / Instruments

Type	Model	Serial No	Calibration Cert. No	Date of Cert.
HN Insulation Tester	AR3125	6819355	KS2250212780001	2025/02/25
HN Probe Meter	HNP-40DM	20240221	AC220250303080 2	2025/03/03

Remark: P / F / NA = Pass / Fail / Not Applicable
The passing criteria for the test is passing the insulation test after for maximum voltage withstand test.
The insulation resistance is over 1000MOhm (*) for HV DC Cable and 30MOhm for ESP Cell

Comment:

	Name:	Signature:	Date:
Test / Checked By : REW No.: Grade (Name of CTA Representative)	Ho Tung		24/04/2025
Witnessed By : (Name of JEC Representative)	John Chan		24/4/2025
Witnessed By : (Name of GCL)	SHAM TZE YUEN		24/4/25
Witnessed By : (Name of AMSU)	Sam Lui		24/4/25
Witnessed By : (Name of ZMSD)	WONG Cheong Shing CIE/TSC/I		24 APR 2025
Witnessed By : (Name of)			

Gammon

CTA INTERNATIONAL AS

Air Purification System – HV Power Supply Units Test & Commissioning Report			
Contract No.:	HY/2019/13	RISC No.:	33640
Project:	Central Kowloon Route - Buildings, Electrical and Mechanical	Date:	24/04/2025
Location:	YVB / HVB / KVB	Room Name:	Plenum 3
T&C Plan Ref. No:		Page:	
Ref. Dwg. No.:			

Part 4 : Functional and Performance Tests for HV Power Supply Units (Sheet 1 of 5)

A) Maximum Voltage Withstand Test for ESP Cell (TCP Section 4.6.1)

From:	ESP HV Switch Room 01 / 02	To:	APS Plenum No.01 / 02 / 03 Sub-assembly A / B / C / D / E

Step 1 & 3 - Insulation Resistance Test before and after the Maximum Voltage Withstand Test

Items	Circuit No. or Details of Equipment	Insulation Resistance (MΩ)	
		Before Max. Withstand Tests	After Max. Withstand Tests
1	02 (1st Col. Ionizer to Earth)	325 (Lower 3 ESP Cell) / 545 (Upper 3 ESP Cell)	437 (Lower 3 ESP Cell) / 592 (Upper 3 ESP Cell)
2	02 (2nd Col. Ionizer to Earth)	73.2 (Lower 3 ESP Cell) / 386 (Upper 3 ESP Cell)	351 (Lower 3 ESP Cell) / 359 (Upper 3 ESP Cell)
3	02 (3rd Col. Ionizer to Earth)	360 (Lower 3 ESP Cell) / 380 (Upper 3 ESP Cell)	446 (Lower 3 ESP Cell) / 442 (Upper 3 ESP Cell)
4	02 (1st to 3rd Col. Collector the Earth)	80.8 (1st Col.) / 30 (2nd Col.) / 58.8 (3rd Col.)	84.3 (1st Col.) / 75 (2nd Col.) / 67.8 (3rd Col.)

Step 2 - Maximum Voltage Withstand Test

Items	Test Voltage (kV DC)	Duration (min)	Measured Voltage (kV DC) Lower	Measured Voltage (kV DC) Upper	Test Result
1	20 (Ionizer)	1	20.3	19.9	P / F / NA
2	20 (Ionizer)		20.3	20.0	P / F / NA
3	20 (Ionizer)		20.3	20.0	P / F / NA
4	8 (Collector)	1		7.4	P / F / NA

B) List of Testing Equipment / Instruments

	Type	Model	Serial No	Calibration Cert. No	Date of Cert.
HV	Insulation Tester	AR3125	6819355	KS2250212780001	2025/02/25
HV	Probe Meter	HVP-40DM	20240221	AC2202503030802	2025/03/03

Remark: P / F / NA = Pass / Fail / Not Applicable
The passing criteria for the test is passing the insulation test after for maximum voltage withstand test.
The insulation resistance is over 1000MOhm (*) for HV DC Cable and 30MOhm for ESP Cell

Comment:

	Name:	Signature:	Date:
Test / Checked By : REW No.: Grade (Name of CTA Representative)	Ho Tung		24/4/2025
Witnessed By : (Name of JEC Representative)	John Chan		24/4/2025
Witnessed By : (Name of GCL)			24/4/25
Witnessed By : (Name of AMSC)	Sam Lo		24/4/25
Witnessed By : (Name of EMSD)	WONG Cheong Shing CIE/TSC/1		24 APR 2025
Witnessed By : (Name of)			

Gammon

CTA INTERNATIONAL AS CLEAN TUNNEL AIR

Air Purification System – HV Power Supply Units Test & Commissioning Report			
Contract No.:	HY/2019/13	RISC No.:	33640
Project:	Central Kowloon Route - Buildings, Electrical and Mechanical	Date:	24/04/2025
Location:	~~YVB / HVB~~ / KVB	Room Name:	Plenum 3
T&C Plan Ref. No:		Page:	
Ref. Dwg. No.:			

Part 4 : Functional and Performance Tests for HV Power Supply Units (Sheet 1 of 5)

A) Maximum Voltage Withstand Test for ESP Cell (TCP Section 4.6.1)

From:	ESP HV Switch Room 01 / 02	To:	APS Plenum No.01 / 02 / 03 Sub-assembly A / B / C / D / E

Step 1 & 3 - Insulation Resistance Test before and after the Maximum Voltage Withstand Test

Items	Circuit No. or Details of Equipment	Insulation Resistance (MΩ)	
		Before Max. Withstand Tests	After Max. Withstand Tests
1	KVB-APS3-ESP-PSC-01 (1st Col. Ionizer to Earth)	338 (Lower 3 ESP Cell) / 341 (Upper 3 ESP Cell)	331 (Lower 3 ESP Cell) / 399 (Upper 3 ESP Cell)
2	KVB-APS3-ESP-PSC-01 (2nd Col. Ionizer to Earth)	235 (Lower 3 ESP Cell) / 193 (Upper 3 ESP Cell)	246 (Lower 3 ESP Cell) / 178 (Upper 3 ESP Cell)
3	KVB-APS3-ESP-PSC-01 (3rd Col. Ionizer to Earth)	391 (Lower 3 ESP Cell) / 369 (Upper 3 ESP Cell)	418 (Lower 3 ESP Cell) / 340. (Upper 3 ESP Cell)
4	KVB-APS3-ESP-PSC-01 (1st to 3rd Col. Collector the Earth)	45.5 (1st Col.) / 42.8 (2nd Col.) / 54.1 (3rd Col.)	62.8 (1st Col.) / 56.3 (2nd Col.) / 99.9 (3rd Col.)

Step 2 - Maximum Voltage Withstand Test

Items	Test Voltage (kV DC)	Duration (min)	Measured Voltage (kV DC) Lower	Measured Voltage (kV DC) Upper	Test Result
1	20 (Ionizer)	1	20.0	20.0	P / F / NA
2	20 (Ionizer)		20.1	19.8	P / F / NA
3	20 (Ionizer)		20.3	19.8	P / F / NA
4	8 (Collector)	1	7.3		P / F / NA

B) List of Testing Equipment / Instruments

Type	Model	Serial No	Calibration Cert. No	Date of Cert.
HV Insulation Tester	AR3125	6819355	KS2525021278000 1	2025/02/25
HV Probe Meter	HVP-40DM	20240221	ACZ20250303080 2	2025/03/03

Remark: P / F / NA = Pass / Fail / Not Applicable
The passing criteria for the test is passing the insulation test after for maximum voltage withstand test.
The insulation resistance is over 1000MOhm (*) for HV DC Cable and 30MOhm for ESP Cell

Comment:

Test / Checked By : REW No.: Grade (Name of CTA Representative)	Name: Ho Tung	Signature:	Date: 24/04/2025
Witnessed By : (Name of JEC Representative)	Name: John Chan	Signature:	Date: 24/04/2025
Witnessed By : (Name of GCL)	Name: SHAM TZE YUEN	Signature:	Date: 24/4/25
Witnessed By : (Name of AMMSL)	Name: Samlo	Signature:	Date: 24/4/2025
Witnessed By : (Name of EMSD)	Name: WONG Cheong Shing CIE/TSC/1	Signature:	Date: 24 APR 2025
Witnessed By : (Name of)	Name:	Signature:	Date:

Gammon

CTA INTERNATIONAL AS CLEAN TUNNEL AIR

Air Purification System – HV Power Supply Units Test & Commissioning Report			
Contract No.:	HY/2019/13	RISC No.:	33640
Project:	Central Kowloon Route - Buildings, Electrical and Mechanical	Date:	24/04/2025
Location:	YVB / HVB / KVB	Room Name:	Plenum 3
T&C Plan Ref. No:		Page:	
Ref. Dwg. No.:			

Part 4 : Functional and Performance Tests for HV Power Supply Units (Sheet 1 of 5)

A) Maximum Voltage Withstand Test for ESP Cell (TCP Section 4.6.1)

From:	ESP HV Switch Room 01 / 02	To:	APS Plenum No.01 / 02 / 03 Sub-assembly A / B / C / D / E

Step 1 & 3 - Insulation Resistance Test before and after the Maximum Voltage Withstand Test

Items	Circuit No. or Details of Equipment	Insulation Resistance (MΩ)	
		Before Max. Withstand Tests	After Max. Withstand Tests
1	01 (1st Col. Ionizer to Earth)	275 (Lower 3 ESP Cell) / 258 (Upper 3 ESP Cell)	223 (Lower 3 ESP Cell) / 3.2G (Upper 3 ESP Cell)
2	01 (2nd Col. Ionizer to Earth)	152 (Lower 3 ESP Cell) / 315 (Upper 3 ESP Cell)	162 (Lower 3 ESP Cell) / 1.82G (Upper 3 ESP Cell)
3	01 (3rd Col. Ionizer to Earth)	479 (Lower 3 ESP Cell) / 76.6 (Upper 3 ESP Cell)	320 (Lower 3 ESP Cell) / 113 (Upper 3 ESP Cell)
4	01 (1st to 3rd Col. Collector the Earth)	61.9 (1st Col.) / 54.1 (2nd Col.) / 101.1 (3rd Col.)	84.2 (1st Col.) / 123 (2nd Col.) / 120 (3rd Col.)

Step 2 - Maximum Voltage Withstand Test

Items	Test Voltage (kV DC)	Duration (min)	Measured Voltage (kV DC) lows	Measured Voltage (kV DC) Upper	Test Result
1	20 (Ionizer)	1	20.3	19.8	P / F / NA
2	20 (Ionizer)		20.2	19.6	P / F / NA
3	20 (Ionizer)		20.2	19.9	P / F / NA
4	8 (Collector)	1		7.4	P / F / NA

B) List of Testing Equipment / Instruments

Type	Model	Serial No	Calibration Cert. No	Date of Cert.
HV Insulation Tester	AR3125	6819355	KS2525021278D001	2025/02/25
HV Probe Meter	HVP-40DM	20240221	AC220250303080 2	2025/03/03

Remark: P / F / NA = Pass / Fail / Not Applicable
The passing criteria for the test is passing the insulation test after for maximum voltage withstand test.
The insulation resistance is over 1000MOhm (*) for HV DC Cable and 30MOhm for ESP Cell

Comment:

	Name:	Signature:	Date:
Test / Checked By : REW No.: Grade (Name of CTA Representative)	Ho Tung		24/04/2025
Witnessed By : (Name of JEC Representative)	John Chan		24/4/2025
Witnessed By : (Name of GEL)	SHAN Pak Yuen		24/4/25
Witnessed By : (Name of AMMSC)	Sam Lui		24/4/2025
Witnessed By : (Name of ZMSD)	WONG Cheong Shing CIE/TSC/1		24 APR 2025
Witnessed By : (Name of)			

Gammon

CTA INTERNATIONAL AS

Air Purification System – HV Power Supply Units Test & Commissioning Report			
Contract No.:	HY/2019/13	RISC No.:	33640
Project:	Central Kowloon Route - Buildings, Electrical and Mechanical	Date:	24/04/2025
Location:	YVB / HVB / KVB	Room Name:	Plenum 3
T&C Plan Ref. No:		Page:	
Ref. Dwg. No.:			

Part 4 : Functional and Performance Tests for HV Power Supply Units (Sheet 1 of 5)

A) Maximum Voltage Withstand Test for ESP Cell (TCP Section 4.6.1)

From:	ESP HV Switch Room 01 / 02	To:	APS Plenum No.01 / 02 / 03 Sub-assembly A / B / C / D / E

Step 1 & 3 - Insulation Resistance Test before and after the Maximum Voltage Withstand Test

Items	Circuit No. or Details of Equipment	Insulation Resistance (MΩ) Before Max. Withstand Tests	Insulation Resistance (MΩ) After Max. Withstand Tests
1	01 (1st Col. Ionizer to Earth)	345 (Lower 3 ESP Cell) / 479 (Upper 3 ESP Cell)	371 (Lower 3 ESP Cell) / 494 (Upper 3 ESP Cell)
2	01 (2nd Col. Ionizer to Earth)	301 (Lower 3 ESP Cell) / 294 (Upper 3 ESP Cell)	354 (Lower 3 ESP Cell) / 341 (Upper 3 ESP Cell)
3	02 (3rd Col. Ionizer to Earth)	220 (Lower 3 ESP Cell) / 474 (Upper 3 ESP Cell)	224 (Lower 3 ESP Cell) / 479 (Upper 3 ESP Cell)
4	02 (1st to 3rd Col. Collector the Earth)	126 (1st Col.) / 155 (2nd Col.) / 74.1 (3rd Col.)	128 (1st Col.) / 158 (2nd Col.) / 112 (3rd Col.)

Step 2 - Maximum Voltage Withstand Test

Items	Test Voltage (kV DC)	Duration (min)	Measured Voltage (kV DC) Lower	Measured Voltage (kV DC) Upper	Test Result
1	20 (Ionizer)	1	20.3	20.0	(P) / F / NA
2	20 (Ionizer)		20.1	19.9	(P) / F / NA
3	20 (Ionizer)		20.2	19.8	(P) / F / NA
4	8 (Collector)	1		7.4	(P) / F / NA

B) List of Testing Equipment / Instruments

	Type	Model	Serial No	Calibration Cert. No	Date of Cert.
HN	Insulation Tester	AR3125	6819355	KS2525021278D001	2025/02/25
HN	Probe Meter	HVP-40DM	20240221	AC2202503030802	2025/03/03

Remark: P / F / NA = Pass / Fail / Not Applicable
The passing criteria for the test is passing the insulation test after for maximum voltage withstand test.
The insulation resistance is over 1000MOhm (*) for HV DC Cable and 30MOhm for ESP Cell

Comment:

	Name:	Signature:	Date:
Test / Checked By : REW No.: Grade (Name of CTA Representative)	Ho Tung		24/04/2025
Witnessed By : (Name of JEC Representative)	John Chan		24/4/2025
Witnessed By : (Name of GCL)	SHAM TSE YUEN		24/4/25
Witnessed By : (Name of AMASU)	San Li		24/4/25
Witnessed By : (Name of ZMSD)	WONG Cheong Shing CIE/TSC/1		24 APR 2025
Witnessed By : (Name of)			

Gammon

CTA INTERNATIONAL AS CLEAN TUNNEL AIR

Air Purification System – HV Power Supply Units Test & Commissioning Report			
Contract No.:	HY/2019/13	RISC No.:	33640
Project:	Central Kowloon Route - Buildings, Electrical and Mechanical	Date:	24/04/2025
Location:	YVB / HVB / KVB	Room Name:	~~24/04/2025~~ Plenum 3
T&C Plan Ref. No:		Page:	
Ref. Dwg. No.:			

Part 4 : Functional and Performance Tests for HV Power Supply Units (Sheet 1 of 5)

A) Maximum Voltage Withstand Test for ESP Cell (TCP Section 4.6.1)

From:	ESP HV Switch Room 01 / 02	To:	APS Plenum No.01 / 02 / 03 Sub-assembly A / B / C / D / E

Step 1 & 3 - Insulation Resistance Test before and after the Maximum Voltage Withstand Test

Items	Circuit No. or Details of Equipment	Insulation Resistance (MΩ)	
		Before Max. Withstand Tests	After Max. Withstand Tests
1	02 (1st Col. Ionizer to Earth)	284 (Lower 3 ESP Cell) / 216 (Upper 3 ESP Cell)	423 (Lower 3 ESP Cell) / 204 (Upper 3 ESP Cell)
2	02 (2nd Col. Ionizer to Earth)	418 (Lower 3 ESP Cell) / 292 (Upper 3 ESP Cell)	486 (Lower 3 ESP Cell) / 293 (Upper 3 ESP Cell)
3	02 (3rd Col. Ionizer to Earth)	211 (Lower 3 ESP Cell) / 298 (Upper 3 ESP Cell)	231 (Lower 3 ESP Cell) / 353 (Upper 3 ESP Cell)
4	02 (1st to 3rd Col. Collector the Earth)	54 (1st Col.) / 53.9 (2nd Col.) / 91.3 (3rd Col.)	82.6 (1st Col.) / 60.3 (2nd Col.) / 122 (3rd Col.)

Step 2 - Maximum Voltage Withstand Test

Items	Test Voltage (kV DC)	Duration (min)	Measured Voltage (kV DC)		Test Result
1	20 (Ionizer)	1	20.3	20.0	P / F / NA
2	20 (Ionizer)		20.2	19.9	P / F / NA
3	20 (Ionizer)		20.3	19.8	P / F / NA
4	8 (Collector)	1		7.4	P / F / NA

B) List of Testing Equipment / Instruments

Type	Model	Serial No	Calibration Cert. No	Date of Cert.
HN Insulation Tester	AR3125	6819355	KS2250212780001	2025/02/25
HN Probe Meter	HNP-40DM	20240221	AC220250303080 2	2025/03/03

Remark: P / F / NA = Pass / Fail / Not Applicable
The passing criteria for the test is passing the insulation test after for maximum voltage withstand test.
The insulation resistance is over 1000MOhm (*) for HV DC Cable and 30MOhm for ESP Cell

Comment:

	Name:	Signature:	Date:
Test / Checked By : REW No.: Grade (Name of CTA Representative)	Ho Tung		24/04/2025
Witnessed By : (Name of JEC Representative)	John Chan		24/4/2025
Witnessed By : (Name of GCL)	SHAM TZE YUEN		24/4/25
Witnessed By : (Name of AMSU)	Sam Lui		24/4/25
Witnessed By : (Name of ZMSD)	WONG Cheong Shing CIE/TSC/I		24 APR 2025
Witnessed By : (Name of)			

Gammon

CTA INTERNATIONAL AS

Air Purification System – HV Power Supply Units Test & Commissioning Report			
Contract No.:	HY/2019/13	RISC No.:	33640
Project:	Central Kowloon Route - Buildings, Electrical and Mechanical	Date:	24/04/2025
Location:	YVB / HVB / KVB	Room Name:	Plenum 3
T&C Plan Ref. No:		Page:	
Ref. Dwg. No.:			

Part 4 : Functional and Performance Tests for HV Power Supply Units (Sheet 1 of 5)

A) Maximum Voltage Withstand Test for ESP Cell (TCP Section 4.6.1)

From:	ESP HV Switch Room 01 / 02	To:	APS Plenum No.01 / 02 / 03 Sub-assembly A / B / C / D / E

Step 1 & 3 - Insulation Resistance Test before and after the Maximum Voltage Withstand Test

Items	Circuit No. or Details of Equipment	Insulation Resistance (MΩ)	
		Before Max. Withstand Tests	After Max. Withstand Tests
1	02 (1st Col. Ionizer to Earth)	325 (Lower 3 ESP Cell) / 545 (Upper 3 ESP Cell)	437 (Lower 3 ESP Cell) / 592 (Upper 3 ESP Cell)
2	02 (2nd Col. Ionizer to Earth)	73.2 (Lower 3 ESP Cell) / 386 (Upper 3 ESP Cell)	351 (Lower 3 ESP Cell) / 359 (Upper 3 ESP Cell)
3	02 (3rd Col. Ionizer to Earth)	360 (Lower 3 ESP Cell) / 380 (Upper 3 ESP Cell)	446 (Lower 3 ESP Cell) / 442 (Upper 3 ESP Cell)
4	02 (1st to 3rd Col. Collector the Earth)	80.8 (1st Col.) / 30 (2nd Col.) / 58.8 (3rd Col.)	84.3 (1st Col.) / 75 (2nd Col.) / 67.8 (3rd Col.)

Step 2 - Maximum Voltage Withstand Test

Items	Test Voltage (kV DC)	Duration (min)	Measured Voltage (kV DC) Lower	Measured Voltage (kV DC) Upper	Test Result
1	20 (Ionizer)	1	20.3	19.9	P / F / NA
2	20 (Ionizer)		20.3	20.0	P / F / NA
3	20 (Ionizer)		20.3	20.0	P / F / NA
4	8 (Collector)	1		7.4	P / F / NA

B) List of Testing Equipment / Instruments

	Type	Model	Serial No	Calibration Cert. No	Date of Cert.
HV	Insulation Tester	AR3125	6819355	KS2250212780001	2025/02/25
HV	Probe Meter	HVP-40DM	20240221	AC2202503030802	2025/03/03

Remark: P / F / NA = Pass / Fail / Not Applicable
The passing criteria for the test is passing the insulation test after for maximum voltage withstand test.
The insulation resistance is over 1000MOhm (*) for HV DC Cable and 30MOhm for ESP Cell

Comment:

	Name:	Signature:	Date:
Test / Checked By : REW No.: Grade (Name of CTA Representative)	Ho Tung		24/4/2025
Witnessed By : (Name of JEC Representative)	John Chan		24/4/2025
Witnessed By : (Name of GCL)			24/4/25
Witnessed By : (Name of AMSC)	Sam Lo		24/4/25
Witnessed By : (Name of EMSD)	WONG Cheong Shing CIE/TSC/1		24 APR 2025
Witnessed By : (Name of)			

Appendix E – Site Acceptance Test (SAT) Reports for the Integrated test of ESP and De-NO2 filters

Integrated Test 1 - Stage 2

Change the combination of TVFs at YVB due to fault of APS equipment (keeping availability of the system)

Simulation:-

- Switch off manually one Power Supply Unit which for YVB APS Plenum 1 to simulate the fault on one column of ESP in APS Plenum 1

Effect:

- YVB-TVF-01 or YVB-TVF-02 switch off
- YVB-TVF-03 and YVB-TVF-04 keep running and the frequency of VSD for YVB-TVF-03 and 04 are keep 50Hz
- YVB-TVF-05 or YVB-TVF-06 switch on and the frequency of VSD for YVB-TVF-05 or 06 are 50Hz
- HVB-TVF-01 to HVB-TVF-02 keep running and the frequency of VSD for HVB-TVF-01 to 02 are keep 50Hz
- Roller shutter of failed ESP in YVB APS plenum 1 closed
- The rest of ESP filters keep switch on in YVB APS plenum 1 and corresponding isolation dampers keep open
- ESP filters are still operated healthy in YVB APS plenum 2 and corresponding isolation damper keep open
- ESP filters switch on in YVB APS plenum 3 and corresponding isolation damper open
- ESP filters are still operated healthy in HVB APS plenum 1 and corresponding isolation dampers keep open
- N90 mode Success post in CCMS workstation ✓
-

Record:

- Record the condition of above equipment

2. Test Results:

The Test is concluded as: PASSED / FAILED
Remarks:

Checked / Tested by GCL: Steven Kwok 9/9/2025 Witnessed by: Brian Lip AMMJV (CARE) 9/9/2025 Witnessed by: SIU Chiu Shek CIE/TSC/2 9/9/2025 Witnessed by:

Change the standby plant at YVB due to fault of APS equipment (keeping availability of the system)

Simulation:-

- Disconnect the door sensor on the door connected with YVB APS Plenum 1 to simulate the door / access panel open during APS operation

Effect:

- YVB-TVF-01 or YVB-TVF-02 switch off
- YVB-TVF-03 and YVB-TVF-04 keep running and the frequency of VSD for YVB-TVF-03 and 04 are keep 50Hz
- YVB-TVF-05 and YVB-TVF-06 are running and the frequency of VSD for YVB-TVF-05 and 06 are 50Hz
- HVB-TVF-01 to HVB-TVF-02 keep running and the frequency of VSD for HVB-TVF-01 to 02 are keep 50Hz
- Roller shutter of failed ESP in YVB APS plenum 1 closed
- All ESP filters switch off in YVB APS plenum 1 and corresponding isolation dampers close
- ESP filters are still operated healthy in YVB APS plenum 2 and corresponding isolation damper keep open
- ESP filters keep on in YVB APS plenum 3 and corresponding isolation damper open
- ESP filters are still operated healthy in HVB APS plenum 1 and corresponding isolation dampers keep open
- N90 mode Success post in CCMS workstation ✓
-

Record:

- Record the condition of above equipment

2. Test Results:

The Test is concluded as: ~~PASSED~~ / FAILED
Remarks: Since YVB-TVF-01 data measurement is ~~has~~ needed, so APS plenum 3 is used to simulate the disconnection of door sensor.

Checked / Tested by GCL: SL 10/9/25 Witnessed by: Brian Ng AMMJV (ARE) 10/9/2025 Witnessed by: SIU Chiu Shek CIE/TSC/2 10/9/2021 Witnessed by: _____

Integrated Test 1 - Stage 4

Keep the ventilation level even failure of equipment
(Checking the availability of system in CCMS)

Simulation:-

- Switch off manually on one Power Supply Unit which for YVB APS Plenum 2 to simulate the fault on one module of ESP in APS Plenum 2

Effect:

- The corresponding of ESP module is fault and corresponding roller shutter is closed
- YVB-TVF-03 to YVB-TVF-06 keep running and the frequency of VSD for YVB-TVF-03 to 06 keep which those fans in YVB deliver 60% air flow
- HVB-TVF-01 to HVB-TVF-02 keep running and the frequency of VSD for HVB-TVF-01 to 02 keep which those fans in HVB deliver 60% air flow
- The other ESP modules are still operated healthy in YVB APS plenum 2 and corresponding isolation dampers keep open
- ESP filters are still operated healthy in YVB APS plenum 3 and corresponding isolation dampers keep open
- ESP filters are still operated healthy in HVB APS plenum 1 and corresponding isolation dampers keep open
- N86 mode Success post in CCMS workstation ✓

Record:
Record the condition of above equipment status on workstation

2. Test Results:

The Test is concluded as: PASSED / FAILED
Remarks: 1. APS plenum 2 (ESP - module D fault), No change for N86 mode.

Checked / Tested by GCL: Sk Steven Kwok ~~9.10.2025~~ 10/9/25 Witnessed by: Brian Ng AMMJV (ARE) 10 Sep 2025 Witnessed by: ✓ SIU Chiu Shek CIE/TSC/2 10/9/2025 Witnessed by: _____

2. The roller shutters were bypassed, the shutters keep opened.

☆ Revised this page

Gammon	CONTRACT NO. HY/2019/13 CENTRAL KOWLOON ROUTE – BUILDINGS, ELECTRICAL AND MECHANICAL WORKS	→ Based on mode table Rev. No.: 0
J3883	Testing Procedure of Integrated Test for Tunnel Ventilation System under Normal Operation J3883-TVS-S-08459	Effective Date :10 Aug 25

Integrated Test 1 - Stage 6

Reduce the ventilation level on failure of equipment
(Checking the availability of system in CCMS)

Simulation:-

- Switch off manually on the other 3 Power Supply Units which for YVB APS Plenum 3 to simulate the fault on 3 modules of ESP in APS Plenum 3

Effect:

- The corresponding of ESP module is fault and corresponding roller shutter is closed
- YVB-TVF-05 or YVB-TVF-06 stop due to the availability of system is less than the system required
- The remaining ESP filters keep switch on in YVB APS plenum 3 and corresponding isolation dampers keep open
- YVB-TVF-03 or 04 keep running and the frequency of VSD for that fan is no change.
- YVB-TVF-03 or 04 switch on and the frequency of VSD for that fan will follow the same group of fan.
- ESP filters are still operated healthy in YVB APS plenum 2 and corresponding isolation dampers keep open
- HVB-TVF-02 or HVB-TVF-01 keep running and the frequency of VSD for HVB-TVF-02 or 01 is no change
- ESP filters are still operated healthy in HVB APS plenum 1 and corresponding isolation dampers keep open
- N83 mode Success post in CCMS workstation ✓

Record:
Record the condition of above equipment status on workstation

2. Test Results:

The Test is concluded as: PASSED / FAILED

Remarks:

1. YVB APS plenum 3 (module C, D, E fault)
2. Typo is found in the above description. The test was done as per mode table. During N83 Mode N83 duty mode, 3 power supply units were OFF at APS Plenum 3 (Fan group P1). Then, the availability was reduced from 200% to 80%. YVB TVF P1B (YVB-TVF-036) was switched off and TVF P2B (YVB-TVF-032) was started up. N83 backup mode success was shown.
3. The roller shutters were bypassed, the shutter keep opened.

Checked / Tested by GCL: ~~9.10.2025~~ 10/9/25 Witnessed by: Brian Nip AMCJV (ARE) 10 Sep 2025 Witnessed by: SIU Chiu Shek CIE/TSC/2 10.9.2025 Witnessed by:

Integrated Test 4 - Stage 2

Change the standby plant at KVB due to safety access to APS Plenum for protection of operator
(keeping availability of the system)

Simulation:-

- Disconnect the door sensor on the door connected with KVB APS Plenum 1 to simulate the door / access panel open during APS operation

Effect:

- KVB-TVF-01 and KVB-TVF-02 switch off
- KVB-TVF-03 and KVB-TVF-04 keep running and the frequency of VSD for KVB-TVF-03 and 04 are keep 50Hz
- KVB-TVF-05 and KVB-TVF-06 switch on and the frequency of VSD for KVB-TVF-05 and 06 are 50Hz
- HVB-TVF-05 to HVB-TVF-06 keep running and the frequency of VSD for HVB-TVF-05 to 06 are keep 50Hz
- All ESP filters switch off in KVB APS plenum 3 and corresponding isolation dampers close
- ESP filters are still operated healthy in KVB APS plenum 2 and corresponding isolation damper keep open
- ESP filters switch on in KVB APS plenum 1 and corresponding isolation damper open
- ESP filters are still operated healthy in HVB APS Plenum 3 and corresponding isolation dampers keep open
- N40 mode Success post in CCMS workstation
- backup

Record:

- Record the condition of above equipment

2. Test Results:

The Test is concluded as: PASSED / FAILED
Remarks:

Checked / Tested by GCL: _____ Witnessed by: _____ Witnessed by: _____ Witnessed by: _____

Sam Li 11/9/25

Brian Ng AMJV(ABE) 11/9/2025

SIU Chiu Shek CIE/TSC/2 11/9/2025

MICHAEL WONG CWTML 11/9/2025

Integrated Test 4- Stage 4

Keep the ventilation level even failure of equipment
(Checking the availability of system in CCMS)

Simulation:-

- Switch off manually on one Power Supply Unit which for KVB APS Plenum 2 to simulate the fault on one module of ESP in APS Plenum 2

Effect:

- The corresponding of ESP module is fault and corresponding roller shutter is closed
- KVB-TVF-03 to KVB-TVF-06 keep running and the frequency of VSD for KVB-TVF-03 to 06 keep which those fans in KVB deliver 80% air flow
- HVB-TVF-05 to HVB-TVF-06 keep running and the frequency of VSD for HVB-TVF-05 to 06 keep which those fans in HVB deliver 80% air flow
- The other ESP modules are still operated healthy in KVB APS plenum 2 and corresponding isolation dampers keep open
- ESP filters are still operated healthy in KVB APS plenum 1 and corresponding isolation dampers keep open
- ESP filters are still operated healthy in HVB APS Plenum 3 and corresponding isolation dampers keep open
- N38 mode Success post in CCMS workstation
  Backup

Record:
Record the condition of above equipment status on workstation

2. Test Results:

The Test is concluded as: PASSED / FAILED
Remarks:

1. After simulation fault of assembly C at APS plenum 2, the mode keeps unchanged.

Checked / Tested by GCL: 12/9/25 Sam Li

Witnessed by: AMMJV (ARE) Brian Ng 12/9/2025

Witnessed by: SIU Chiu Shek CIE/TSC/2 12/9/2025

Witnessed by: MICHAEL WONG CWTML 12/9/2025

2. The roller shutters were bypassed, the shutters keeps opened.

Integrated Test 4- Stage 6

Reduce the ventilation level on failure of equipment
(Checking the availability of system in CCMS)

Simulation:-

- Switch off manually on the other 1 Power Supply Units which for KVB APS Plenum 2 to simulate the fault on the module of ESP in APS Plenum 2

A/C.

Effect:

- The corresponding of ESP module is fault and corresponding roller shutter is closed
- KVB-TVF-03 to KVB-TVF-06 keep running but the frequency of VSD for KVB-TVF-03 to 06 rump down to the level which those fans in KVB deliver 60% air flow
- HVB-TVF-05 to HVB-TVF-06 keep running but the frequency of VSD for HVB-TVF-05 to 06 rump down to the level which those fans in HVB deliver 60% air flow
- The other ESP filters are still operated healthy in KVB APS plenum 2 and corresponding isolation dampers keep open
- ESP filters are still operated healthy in KVB APS plenum 1 and corresponding isolation dampers keep open
- ESP filters are still operated healthy in HVB APS Plenum 3 and corresponding isolation dampers keep open
- N36 mode Success post in CCMS workstation

Backup.

Record:
Record the condition of above equipment status on workstation

2. Test Results:

The Test is concluded as: PASSED / FAILED
Remarks: 1. The roller shutters were bypassed. the shutters keep opened.

Checked / Tested by GCL: _____ Sam Li (12/9/25)

Witnessed by: _____ Brian Lip AMMJV(ARE) 12/9/2025

Witnessed by: _____ SIU Chiu Shek CIE/TSC/2 12/9/2025

Witnessed by: _____ MICHAEL WONG EWTML 12/9/2025

Integrated Test 4 - Stage 10

Tunnel Ventilation system under building fire condition

Simulation:-
Using the magnet to activate the smoke detector one of the smoke detector in KVB to simulate the building fire occur in KVB

Effect:

- TVF in KVB Switch off
- All ESP filters in KVB APS plenum switch off and corresponding isolation dampers close
- Building fire post in CCMS workstation

Record:
Record the condition of above equipment status on workstation

2. Test Results:

The Test is concluded as: PASSED / FAILED
Remarks: 1. Tunnel Jet fan keeps running.

Checked Tested by GCL: Sam Li 12/9/25 Witnessed by: Brian Lep AMMJV(ARE) 12/9/2025 Witnessed by: SIU Chiu Shek CIE/TSC/2 12/9/2025 Witnessed by: MICHAEL WONG CNTML 12/9/2025

General remark: Supplemental documents (e.g. ① RPM, vibration & Winding temperature (mA measurement ② motor bearing temperature (DE & NDE) ohm measurement ③ Running current, power factor Harmonic data.) will be given in Rev. A of this form.

~~See next page.~~

Appendix F – Site Acceptance Test (SAT) Reports for Performance integrated test of Module (APS with associated TVF) with Tunnel Portals Emission

5.2.2 Integrated Test 1 – stage 1

It is the test for level up and down ventilation level to control the portal emission for Westbound Tunnel (N80 to N90)

Simulate the velocity to **0.4m/s, 0.4m/s and 0.4m/s** in tunnel air flow sensors at CP39 Westbound and the velocity **0.03m/s, 0.03m/s and 0.03m/s** in tunnel air flow sensor at CP1 Westbound to start the test from N80 mode operate

<u>Level up the ventilation level from N80 to N81</u>

Simulation:-

- Change the countdown a preset time from 15mins to 5mins
- Simulate the velocity to **0.4m/s, 0.4m/s and 0.4m/s** in tunnel air flow sensors at CP39 Westbound and the velocity **0.04m/s, 0.04m/s and 0.04m/s** in tunnel air flow sensor at CP1 Westbound to simulate the ratio of total-out air flow to total-in air flow is more than 8%

Effect:

- YVB-TVF-02 switch on and frequency of VSD for YVB-TVF-02 is same with the frequency of VSD for YVB-TVF-01
- ESP filters are still operated healthy in APS plenum 1
- N81 mode Success post in CCMS workstation

Record:

- Record the condition of above equipment status on workstation

2. <u>Test Results:</u>

The Test is concluded as: PASSED / FAILED
Remarks: YVB-TVF-05 vibration, RPM mA are measured in N80 mode. YVB-TVF-05 casing vibration is measured.

Checked / Tested by GCL: Sam Li Witnessed by: Brian Ng AMMJV (CARE) 9/9/2025 Witnessed by: SIU Chiu Shek CIE/TSC/2 9/9/2025 Witnessed by: _____

Level up the ventilation level from N81 to N82

Simulation:-

- Simulate the velocity to **0.8m/s, 0.8m/s and 0.8m/s** in tunnel air flow sensors at CP39 Westbound and the velocity **0.08m/s, 0.08m/s and 0.08m/s** in tunnel air flow sensor at CP1 Westbound to simulate the ratio of total-out air flow to total-in air flow is more than 8%

Effect:

- YVB-TVF-01 and YVB-TVF-02 keep running and the frequency of VSD for YVB-TVF-01 and 02 are no change
- HVB-TVF-01 switch on and the frequency of VSD for HVB-TVF-01 rump up to the level which delivered 50% airflow
- ESP filters are still operated healthy in YVB APS plenum 1 and corresponding isolation dampers keep open
- ESP filters are switch on in HVB APS plenum 1 and corresponding isolation dampers open
- N82 mode Success post in CCMS workstation ✓

Record:

- Record the condition of above equipment status on workstation

2. Test Results:

The Test is concluded as: ~~PASSED~~ / FAILED
Remarks:

Checked / Tested by GCL: Steven Kwok 9/9/2025 Witnessed by: Brian Nip ANMOV (ARE) 9/9/2025 Witnessed by: SIU Chiu Shek CIE/TSC/2 9/9/2025 Witnessed by: _____

Level up the ventilation level from N82 to N83

Simulation:-
Simulate the velocity to **1.2m/s, 1.2m/s and 1.2m/s** in tunnel air flow sensors at CP39 Westbound and the velocity **0.11m/s, 0.11m/s and 0.11m/s** in tunnel air flow sensor at CP1 Westbound to simulate the ratio of total-out air flow to total-in air flow is more than 8%

Effect:

- YVB-TVF-01 and YVB-TVF-02 keep running and frequency of VSD for YVB-TVF-01 and 02 is no change
- YVB-TVF-03 switches on and the frequency of VSD for YVB-TVF-03 is same as the frequency of VSD for YVB-TVF-01 and 02
- HVB-TVF-01 keeps running and the frequency of VSD for HVB-TVF-01 is no change
- ESP filters are still operated healthy in YVB APS plenum 1 and corresponding isolation dampers keep open
- ESP filters are switch on in YVB APS plenum 2 and corresponding isolation dampers open
- ESP filters are still operated healthy in HVB APS plenum 1 and corresponding isolation dampers keep open
- N83 mode Success post in CCMS workstation ✓

Record:

- Record the condition of above equipment status on workstation

2. Test Results:

The Test is concluded as: ~~PASSED~~ / FAILED
Remarks:

Checked / Tested by GCL: Sk Steven Kwok 9/9/2025 Witnessed by: Brian Ng AMTSV (ARE) 9/9/2025 Witnessed by: SIU Chiu Shek CIE/TSC/2 9/9/2025 Witnessed by:

Level up the ventilation level from N83 to N84

Simulation:-
Simulate the velocity to **1.6m/s, 1.6m/s and 1.6m/s** in tunnel air flow sensors at CP39 Westbound and the velocity **0.14m/s, 0.14m/s and 0.14m/s** in tunnel air flow sensor at CP1 Westbound to simulate the ratio of total-out air flow to total-in air flow is more than 8%

Effect:

- YVB-TVF-01 and YVB-TVF-02 keep running and the frequency of VSD of YVB-TVF-01 and 02 are no change
- YVB-TVF-04 switches on and the frequency of VSD for YVB-TVF-04 is same as the frequency of VSD for YVB-TVF-03
- HVB-TVF-01 is keep running and the frequency of VSD for HVB-TVF-01 is no change
- ESP filters are still operated healthy in YVB APS plenum 1
- ESP filters are still operated healthy in YVB APS plenum 2
- ESP filters are still operated healthy in HVB APS plenum 1
- N84 mode Success post in CCMS workstation ✓

Record:

- Record the condition of above equipment status on workstation

2. Test Results:

The Test is concluded as: ~~PASSED~~ / FAILED
Remarks: YVB-TVF-01 vibration, RPM m/s are measured. YVB-TVF-01 casing vibration is measured.

Checked / Tested by GCL: Steven Kwok 9/9/2025 Witnessed by: Brian NP AMMJV (ARE) 9/9/2025 Witnessed by: SIU Chiu Shek CIE/TSC/2 9/9/2025 Witnessed by:

Level up the ventilation level from N84 to N85

Simulation:-
Simulate the velocity to **2.0m/s, 2.0m/s and 2.0m/s** in tunnel air flow sensors at CP39 Westbound and the velocity **0.16m/s, 0.16m/s and 0.16m/s** in tunnel air flow sensor at CP1 Westbound to simulate the ratio of total-out air flow to total-in air flow is more than 8%

Effect:

- YVB-TVF-01 to YVB-TVF-04 keep running and the frequency of VSD for YVB-TVF-01 to 04 are no change
- HVB-TVF-02 switches on and the frequency of VSD for HVB-TVF-02 is same as the frequency of VSD for HVB-TVF-01
- ESP filters are still operated healthy in YVB APS plenum 1&2 and corresponding isolation dampers keep open
- ESP filters are still operated healthy in HVB APS plenum 1 and corresponding isolation dampers keep open
- N85 mode Success post in CCMS workstation ✓

Record:

- Record the condition of above equipment status on workstation

2. Test Results:

The Test is concluded as: PASSED / FAILED
Remarks: Casing vibration & YVB.- TVF- 05 is measured.

Checked / Tested by GCL: Steven Kwok 8/9/2025 Witnessed by: Brian Ng AMMJV (CARE) 9/9/2025 Witnessed by: SIU Chiu Shek CIE/TSC/2 9/9/2025 Witnessed by:

Level up the ventilation level from N85 to N86

Simulation:-
Simulate the velocity to **2.5m/s, 2.5m/s and 2.5m/s** in tunnel air flow sensors at CP39 Westbound and the velocity **0.2m/s, 0.2m/s and 0.2m/s** in tunnel air flow sensor at CP1 Westbound to simulate the ratio of total-out air flow to total-in air flow is more than 8%

Effect:

- YVB-TVF-01 to YVB-TVF-04 keep running but the frequency of VSD for YVB-TVF-01 to 04 rump up to the level which those fans in YVB deliver 60% air flow
- HVB-TVF-01 to HVB-TVF-02 keep running but the frequency of VSD for HVB-TVF-01 to 02 rump up to the level which those fans in HVB deliver 60% air flow
- ESP filters are still operated healthy in YVB APS plenum 1&2 and corresponding isolation dampers keep open
- ESP filters are still operated healthy in HVB APS plenum 1 and corresponding isolation dampers keep open
- N86 mode Success post in CCMS workstation ✓

Record:

- Record the condition of above equipment status on workstation

2. Test Results:

The Test is concluded as: PASSED / FAILED
Remarks: Casing Vibration of YVB-TVF-05 is measured.

Checked / Tested by GCL: _____ Witnessed by: _____ Witnessed by: _____ Witnessed by: _____

Steven Kwok 9/9/2025

Brian Ng AMMOV (ARE) 9/9/2025

SIU Chiu Shek CIE/TSC/2 9/9/2025

Level up the ventilation level from N86 to N87

Simulation:-
Simulate the velocity to **3.0m/s, 3.0m/s and 3.0m/s** in tunnel air flow sensors at CP39 Westbound and the velocity **0.3m/s, 0.3m/s and 0.3m/s** in tunnel air flow sensor at CP1 Westbound to simulate the ratio of total-out air flow to total-in air flow is more than 8%

Effect:

- YVB-TVF-01 to YVB-TVF-04 keep running but the frequency of VSD for YVB-TVF-01 to 04 rump up to the level which those fans in YVB deliver 70% air flow
- HVB-TVF-01 to HVB-TVF-02 keep running but the frequency of VSD for HVB-TVF-01 to 02 rump up to the level which those fans in HVB deliver 70% air flow
- ESP filters are still operated healthy in YVB APS plenum 1&2 and corresponding isolation dampers keep open
- ESP filters are still operated healthy in HVB APS plenum 1 and corresponding isolation dampers keep open
- N87 mode Success post in CCMS workstation ✓

Record:

- Record the condition of above equipment status on workstation

2. Test Results:

The Test is concluded as: PASSED / FAILED
Remarks: Casing vibration of YVB-TVF-05 is measured.

Checked / Tested by GCL: Steven Kwok 9/9/2025 Witnessed by: Brian Ng AUMJV (ARE) 9/9/2025 Witnessed by: SIU Chiu Shek CIE/TSC/2 9/9/2025 Witnessed by: _____

Level up the ventilation level from N87 to N88

Simulation:-
Simulate the velocity to **3.5m/s, 3.5m/s and 3.5m/s** in tunnel air flow sensors at CP39 Westbound and the velocity **0.3m/s, 0.3m/s and 0.3m/s** in tunnel air flow sensor at CP1 Westbound to simulate the ratio of total-out air flow to total-in air flow is more than 8%

Effect:

- YVB-TVF-01 to YVB-TVF-04 keep running but the frequency of VSD for YVB-TVF-01 to 04 rump up to the level which those fans in YVB deliver 80% air flow
- HVB-TVF-01 to HVB-TVF-02 keep running but the frequency of VSD for HVB-TVF-01 to 02 rump up to the level which those fans in HVB deliver 80% air flow
- ESP filters are still operated healthy in YVB APS plenum 1&2 and corresponding isolation dampers keep open
- ESP filters are still operated healthy in HVB APS plenum 1 and corresponding isolation dampers keep open
- N88 mode Success post in CCMS workstation ✓

Record:
Record the condition of above equipment status on workstation

2. Test Results:

The Test is concluded as: PASSED / FAILED
Remarks: Casing vibration of ~~TF~~ YVB-TVF-05 is measured.

Checked / Tested by GCL: Sk Steven Kwok 9/9/2025 Witnessed by: Brian Ng AMMJV (ARE) 9/9/2025 Witnessed by: SIU Chiu Shek CIE/TSC/2 9/9/2025 Witnessed by:

Level up the ventilation level from N88 to N89

Simulation:-
Simulate the velocity to **4.1m/s, 4.1m/s and 4.1m/s** in tunnel air flow sensors at CP39 Westbound and the velocity **0.32m/s, 0.32m/s and 0.32m/s** in tunnel air flow sensor at CP1 Westbound to simulate the ratio of total-out air flow to total-in air flow is more than 8%

Effect:

- YVB-TVF-01 to YVB-TVF-04 keep running but the frequency of VSD for YVB-TVF-01 to 04 rump up to the level which those fans in YVB deliver 90% air flow
- HVB-TVF-01 to HVB-TVF-02 keep running but the frequency of VSD for HVB-TVF-01 to 02 rump up to the level which those fans in HVB deliver 90% air flow
- ESP filters are still operated healthy in YVB APS plenum 1&2 and corresponding isolation dampers keep open
- ESP filters are still operated healthy in HVB APS plenum 1 and corresponding isolation dampers keep open
- N89 mode Success post in CCMS workstation ✓

Record:
Record the condition of above equipment status on workstation

2. Test Results:

The Test is concluded as: PASSED / FAILED
Remarks:
Casing vibration of YVB-TVF-01 is measured.

Checked / Tested by GCL: Steven Kwok 8/9/2025 Witnessed by: Brian Ng ANMJV (ARE) 9/9/2025 Witnessed by: SIU Chiu Shek CIE/TSC/2 9/9/2025 Witnessed by: _____

Level up the ventilation level from N89 to N90

Simulate the velocity to **4.6m/s, 4.6m/s and 4.6m/s** in tunnel air flow sensors at CP39 Westbound and the velocity **0.4m/s, 0.4m/s and 0.4m/s** in tunnel air flow sensor at CP1 Westbound to simulate the ratio of total-out air flow to total-in air flow is more than 8%

Effect:

- YVB-TVF-01 to YVB-TVF-04 keep running but the frequency of VSD for YVB-TVF-01 to 04 rump up to 50Hz
- HVB-TVF-01 to HVB-TVF-02 keep running but the frequency of VSD for HVB-TVF-01 to 02 rump up to 50Hz
- ESP filters are still operated healthy in YVB APS plenum 1&2 and corresponding isolation dampers keep open
- ESP filters are still operated healthy in HVB APS plenum 1 and corresponding isolation dampers keep open
- N90 mode Success post in CCMS workstation ✓

Record:

- Record the condition of above equipment status on workstation
- Record the power factor and total harmonic distortion in the meter at the building MCC and HVSB

2. Test Results:

The Test is concluded as: PASSED / FAILED
Remarks: Casing vibration at YVB-TVF-01 & 05 are measured.

Checked / Tested by GCL: Sk Steven Kwok 9/9/2025

Witnessed by: Brian Kip AMMJV (ARE) 9/9/2025

Witnessed by: SIU Chiu Shek CIE/TSC/2 9/9/2025

Witnessed by: _____

Integrated Test 1 - Stage 3

Level down the ventilation level from N90 to N89

Simulation:-
Simulate the velocity to **4.6m/s, 4.6m/s and 4.6m/s** in tunnel air flow sensors at CP39 Westbound and the velocity **0.3m/s, 0.3m/s and 0.3m/s** in tunnel air flow sensor at CP1 Westbound to simulate the ratio of total-out air flow to total-in air flow is less than 8%

Effect:

- YVB-TVF-03 to YVB-TVF-06 keep running but the frequency of VSD for YVB-TVF-03 to 06 rump down to the level which those fans in YVB deliver 90% air flow
- HVB-TVF-01 to HVB-TVF-02 keep running but the frequency of VSD for HVB-TVF-01 to 02 rump up to the level which those fans in HVB deliver 90% air flow
- ESP filters are still operated healthy in YVB APS plenum 2 and 3 and corresponding isolation dampers keep open
- ESP filters are still operated healthy in HVB APS plenum 1 and corresponding isolation dampers keep open
- N89 mode Success post in CCMS workstation ✓

Record:
Record the condition of above equipment status on workstation

2. Test Results:

The Test is concluded as: PASSED / FAILED
Remarks: 1. Casing vibration of HVB-TVF-02 is measured.

Checked / Tested by GCL: _____ 10/9/25 ~~9.10.2025~~ Steven Lee

Witnessed by: _____ Brian Nip AMMJV (ARE) 10/9/2025

Witnessed by: _____ SIU Chiu Shek CIE/TSC/2 10/9/2025

Witnessed by: _____

Level down the ventilation level from N89 to N88

Simulation:-
Simulate the velocity to **4.10m/s, 4.10m/s and 4.10m/s** in tunnel air flow sensors at CP39 Westbound and the velocity **0.24m/s, 0.24m/s and 0.24m/s** in tunnel air flow sensor at CP1 Westbound to simulate the ratio of total-out air flow to total-in air flow is less than 8%

Effect:

- YVB-TVF-03 to YVB-TVF-06 keep running but the frequency of VSD for YVB-TVF-03 to 06 rump down to the level which those fans in YVB deliver 80% air flow
- HVB-TVF-01 to HVB-TVF-02 keep running but the frequency of VSD for HVB-TVF-01 to 02 rump up to the level which those fans in HVB deliver 80% air flow
- ESP filters are still operated healthy in YVB APS plenum 2&3 and corresponding isolation dampers keep open
- ESP filters are still operated healthy in HVB APS plenum 1 and corresponding isolation dampers keep open
- N88 mode Success post in CCMS workstation ✓

Record:
Record the condition of above equipment status on workstation

2. Test Results:

The Test is concluded as: PASSED / FAILED
Remarks: 1. Casing vibration of HVB-TVF-02 is measured.

Checked / Tested by GCL: SK Steven Kwok ~~9.10.2025~~ 10/9/25 — Witnessed by: Brian Nip AMMJV (ARE) 10 Sep 2025 — Witnessed by: SIU Chiu Shek CIE/TSC/2 10/9/2025 — Witnessed by:

Level down the ventilation level from N88 to N87

Simulation:-
Simulate the velocity to **3.5m/s, 3.5m/s and 3.5m/s** in tunnel air flow sensors at CP39 Westbound and the velocity **0.24m/s, 0.24m/s and 0.24m/s** in tunnel air flow sensor at CP1 Westbound to simulate the ratio of total-out air flow to total-in air flow is less than 8%

Effect:

- YVB-TVF-03 to YVB-TVF-06 keep running but the frequency of VSD for YVB-TVF-03 to 06 rump down to the level which those fans in YVB deliver 70% air flow
- HVB-TVF-01 to HVB-TVF-02 keep running but the frequency of VSD for HVB-TVF-01 to 02 rump up to the level which those fans in HVB deliver 70% air flow
- ESP filters are still operated healthy in YVB APS plenum 2&3 and corresponding isolation dampers keep open
- ESP filters are still operated healthy in HVB APS plenum 1 and corresponding isolation dampers keep open
- N87 mode Success post in CCMS workstation ✓

Record:
Record the condition of above equipment status on workstation

2. Test Results:

The Test is concluded as: PASSED / FAILED
Remarks: 1. Casing Vibration of HVB-TVF-02 is measured.

Checked / Tested by GCL: Steven Kwok ~~9.10.2025~~ 10/9/25 — Witnessed by: Brian Ng AMMJV (ARE) 10 Sep 2025 — Witnessed by: SIU Chiu Shek CIE/TSC/2 10/9/2025 — Witnessed by: _____

Level down the ventilation level from N87 to N86

Simulation:-
Simulate the velocity to **3.01m/s, 3.01m/s and 3.01m/s** in tunnel air flow sensors at CP39 Westbound and the velocity **0.21m/s, 0.21m/s and 0.21m/s** in tunnel air flow sensor at CP1 Westbound to simulate the ratio of total-out air flow to total-in air flow is less than 8%

Effect:

- YVB-TVF-03 to YVB-TVF-06 keep running but the frequency of VSD for YVB-TVF-03 to 06 rump down to the level which those fans in YVB deliver 60% air flow
- HVB-TVF-01 to HVB-TVF-02 keep running but the frequency of VSD for HVB-TVF-01 to 02 rump up to the level which those fans in HVB deliver 60% air flow
- ESP filters are still operated healthy in YVB APS plenum 2&3 and corresponding isolation dampers keep open
- ESP filters are still operated healthy in HVB APS plenum 1 and corresponding isolation dampers keep open
- N86 mode Success post in CCMS workstation

Record:
Record the condition of above equipment status on workstation

2. Test Results:

The Test is concluded as: PASSED / FAILED
Remarks: 1. Casing Vibration of HVB-TVF-02 is measured.

Checked / Tested by GCL: 10/9/25 ~~9.10.2025~~ Steven Lau Witnessed by: Brian Ng AMJV (ARE) 10 Sep 2025 Witnessed by: SIU Chiu Shek CIE/TSC/2 10/9/2025 Witnessed by: _____

Integrated Test 1 - Stage 5

Level down the ventilation level from N86 to N85

Simulation:-
Simulate the velocity to **2.5m/s, 2.5m/s and 2.5m/s** in tunnel air flow sensors at CP39 Westbound and the velocity **0.18m/s, 0.18m/s and 0.18m/s** in tunnel air flow sensor at CP1 Westbound to simulate the ratio of total-out air flow to total-in air flow is less than 8%

Effect:

- YVB-TVF-03 to YVB-TVF-06 keep running but the frequency of VSD for YVB-TVF-03 to 06 rump down to the level which those fans in YVB deliver 50% air flow
- HVB-TVF-01 to HVB-TVF-02 keep running but the frequency of VSD for HVB-TVF-01 to 02 rump up to the level which those fans in HVB deliver 50% air flow
- ESP filters are still operated healthy in YVB APS plenum 2 and 3 and corresponding isolation dampers keep open
- ESP filters are still operated healthy in HVB APS plenum 1 and corresponding isolation dampers keep open
- N85 mode Success post in CCMS workstation ✓

Record:
Record the condition of above equipment status on workstation

2. Test Results:

The Test is concluded as: PASSED / FAILED
Remarks: 1. Vibration of HVB - TVF - 02 is measured. Casing

Checked / Tested by GCL: SL 10/9/25 ~~9.10.2025~~ Steven Kwok

Witnessed by: Brian Ng AMMJV (CARE) 10 Sep 2025

Witnessed by: SIU Chiu Shek CIE/TSC/2 10/9/2025

Witnessed by: _____

Level down the ventilation level from N85 to N84

Simulation:-
Simulate the velocity to **2.0m/s, 2.0m/s and 2.0m/s** in tunnel air flow sensors at CP39 Westbound and the velocity **0.14m/s, 0.14m/s and 0.14m/s** in tunnel air flow sensor at CP1 Westbound to simulate the ratio of total-out air flow to total-in air flow is less than 8%

Effect:

- YVB-TVF-03 to YVB-TVF-06 keep running but the frequency of VSD for YVB-TVF-03 to 06 rump down to the level which those fans in YVB deliver 50% air flow
- Either HVB-TVF-02 or HVB-TVF-01 keep running and the frequency of VSD for the running TVF at HVB is no change
- Either HVB-TVF-01 or HVB-TVF-02 switch off
- ESP filters are still operated healthy in YVB APS plenum 2&3 and corresponding isolation dampers keep open
- ESP filters are still operated healthy in HVB APS plenum 1 and corresponding isolation dampers keep open
- N84 mode Success post in CCMS workstation ✓

Record:
Record the condition of above equipment status on workstation

2. Test Results:

The Test is concluded as: ~~PASSED~~ / FAILED
Remarks: In Vibration of HVB-TVF-02 is measured. Casing

Checked / Tested by GCL: Steven Kwok 10.09.2025 Witnessed by: Brian Ng AMMJV (ARE) 10 Sep 2025 Witnessed by: SIU Chiu Shek CIE/TSC/2 10/9/2025 Witnessed by: _____

Level down the ventilation level from N84 to N83

Simulation:
Simulate the velocity to **1.6m/s, 1.6m/s and 1.6m/s** in tunnel air flow sensors at CP39 Westbound and the velocity **0.11m/s, 0.11m/s and 0.11m/s** in tunnel air flow sensor at CP1 Westbound to simulate the ratio of total-out air flow to total-in air flow is less than 8%

Effect:

- YVB-TVF-04 to YVB-TVF-06 keep running and the frequency of VSD for YVB-TVF-04 to 06 is no change
- YVB-TVF-03 or YVB-TVF-04 switch off
- HVB-TVF-02 or HVB-TVF-01 keep running and the frequency of VSD for HVB-TVF-02 or 01 is no change
- ESP filters are still operated healthy in YVB APS plenum 2 and corresponding isolation dampers keep open
- ESP filters are still operated healthy in YVB APS plenum 3 and corresponding isolation dampers keep open
- ESP filters are still operated healthy in HVB APS plenum 1 and corresponding isolation dampers keep open

- N83 mode Success post in CCMS workstation ✓

Record:
Record the condition of above equipment status on workstation

2. Test Results:

The Test is concluded as: PASSED / FAILED
Remarks:

Checked / Tested by GCL: _____ Witnessed by: _____ Witnessed by: _____ Witness by: _____

~~9.10.2025~~
10/9/25

Brian Ng
AMMJV (ARE)
10 Sep 2025

SIU Chiu Shek
CIE/TSC/2
10.9.2025

5.2.2 Integrated Test 4 – stage 1

It is the test for level up and down ventilation level to control the portal emission for Eastbound Tunnel (N30 to N40)

Simulate the velocity to **0.5m/s, 0.5m/s and 0.5 m/s** in tunnel air flow sensors at CP1 Eastbound and the velocity **0.03m/s, 0.03m/s and 0.03m/s** in tunnel air flow sensor at CP39 Eastbound to start the test from N30 mode operate

Level up the ventilation level from N30 to N31

Simulation:-
Simulate the velocity to **0.5m/s, 0.5m/s and 0.5 m/s** in tunnel air flow sensors at CP1 Eastbound and the velocity **0.05m/s, 0.05m/s and 0.05m/s** in tunnel air flow sensor at CP39 Eastbound to simulate the ratio of total-out air flow to total-in air flow is more than 8%

Effect:
- KVB-TVF-02 or 01 switch on and frequency of VSD for the fan is same with the frequency of VSD with the same group
- ESP filters are still operated healthy in APS plenum 3
- N31 mode Success post in CCMS workstation

Record:
- Record the condition of above equipment status on workstation

2. Test Results:

The Test is concluded as: ~~PASSED~~ / FAILED
Remarks: 1. Casing & vibration of KVB-TVF-02 is measured.

Checked / Tested by GCL: Sam Li 11/9/25 Witnessed by: Brian Ng 11/9/25 AMMJV (ARE) Witness by: SIU Chiu Shek CIE/TSC/2 11/9/2025 Witnessed by: CWTML Michael Wong 11/9/2025

Level up the ventilation level from N31 to N32

Simulation:-

- Simulate the velocity to **0.9m/s, 0.9m/s and 0.9m/s** in tunnel air flow sensors at CP1 Eastbound and the velocity **0.08m/s, 0.08m/s and 0.08m/s** in tunnel air flow sensor at CP39 Eastbound to simulate the ratio of total-out air flow to total-in air flow is more than 8%

Effect:

- KVB-TVF-01 and KVB-TVF-02 keep running and the frequency of VSD for KVB-TVF-01 and 02 are no change ✓
- HVB-TVF-05 or 06 switch on and the frequency of VSD for that fan rump up to the level which delivered 50% airflow
- ESP filters are still operated healthy in KVB APS plenum 3 and corresponding isolation dampers keep open
- ESP filters in HVB APS Plenum 3 switch on and corresponding isolation dampers open
- N32 mode Success post in CCMS workstation ✓

Record:

- Record the condition of above equipment status on workstation

2. Test Results:

The Test is concluded as: ~~PASSED~~ / FAILED
Remarks: 1. KVB-TVF-01 casing vibration is measured.

Checked / Tested by GCL: Sam Li 11/9/25

Witnessed by: Brian Ng 11/9/2025 AMMJV (ARE)

Witnessed by: SIU Chiu Shek CIE/TSC/2 11/9/2025

Witnessed by: Michael Wong CWTML 11/9/2025

Level up the ventilation level from N32 to N33

Simulation:-
Simulate the velocity to **1.5m/s, 1.5m/s and 1.5m/s** in tunnel air flow sensors at CP1 Eastbound and the velocity **0.12m/s, 0.12m/s and 0.12m/s** in tunnel air flow sensor at CP39 Eastbound to simulate the ratio of total-out air flow to total-in air flow is more than 8%

Effect:

- KVB-TVF-01 and KVB-TVF-02 keep running and frequency of VSD for KVB-TVF-01 and 02 is no change
- KVB-TVF-03 or 04 switches on and the frequency of VSD for that fan is same as the frequency of VSD for KVB-TVF-01 and 02
- HVB-TVF-05 or 06 keeps running and the frequency of VSD for HVB-TVF-05 or 06 is no change
- ESP filters are still operated healthy in KVB APS plenum 3 and corresponding isolation dampers keep open
- ESP filters in KVB APS plenum 2 switch on and corresponding isolation dampers open
- ESP filters are still operated healthy in HVB APS Plenum 3 and corresponding isolation dampers keep open
- N33 mode Success post in CCMS workstation ✓

Record:

- Record the condition of above equipment status on workstation

2. Test Results:

The Test is concluded as: ~~PASSED~~ / FAILED
Remarks:

Checked / Tested by GCL: Sam Li 11/9/25 Witnessed by: Brian Nip AUMJV(ARE) 11/9/2025 Witnessed by: SIU Chiu Shek CIE/TSC/2 11/9/2025 Witnessed by: MICHAEL WONG CWTML 11/9/2025

Level up the ventilation level from N33 to N34

Simulation:-
Simulate the velocity to **2.0m/s, 2.0m/s and 2.0m/s** in tunnel air flow sensors at CP1 Eastbound and the velocity **0.15m/s, 0.15m/s and 0.15m/s** in tunnel air flow sensor at CP39 Eastbound to simulate the ratio of total-out air flow to total-in air flow is more than 8%

Effect:

- KVB-TVF-01 and KVB-TVF-02 keep running and the frequency of VSD of KVB-TVF-01 and 02 are no change
- KVB-TVF-04 or 03 switches on and the other in the same group is keep running. The frequency of VSD for the fans are in same frequency of VSD
- HVB-TVF-05 or 06 is keep running and the frequency of VSD for HVB-TVF-05 or 06 is no change
- ESP filters are still operated healthy in KVB APS plenum 3&2 and corresponding isolation dampers keep open
- ESP filters are still operated healthy in HVB APS Plenum 3 and corresponding isolation dampers keep open
- N34 mode Success post in CCMS workstation ✓

Record:

- Record the condition of above equipment status on workstation

2. Test Results:

The Test is concluded as: PASSED / FAILED
Remarks:

Checked / Tested by GCL: Sam Li 11/9/25 Witnessed by: Brian Ng AMMJV (CARE) 11/9/2025 Witnessed by: SIU Chiu Shek CIE/TSC/2 11/9/2025 Witnessed by: Michael Wong CWTML. 11/9/2025

Level up the ventilation level from N34 to N35

Simulation:-
Simulate the velocity to **2.6m/s, 2.6m/s and 2.6m/s** in tunnel air flow sensors at CP1 Eastbound and the velocity **0.18m/s, 0.18m/s and 0.18m/s** in tunnel air flow sensor at CP39 Eastbound to simulate the ratio of total-out air flow to total-in air flow is more than 8%

Effect:

- KVB-TVF-01 to KVB-TVF-04 keep running and the frequency of VSD for KVB-TVF-01 to 04 are no change
- HVB-TVF-06 or 05 switches on and the other in the same group is keep running. The frequency of VSD for the fans are in same frequency of VSD
- ESP filters are still operated healthy in KVB APS plenum 3&2 and corresponding isolation dampers keep open
- ESP filters are still operated healthy in HVB APS Plenum 3 and corresponding isolation dampers keep open
- N35 mode Success post in CCMS workstation ✓

Record:

- Record the condition of above equipment status on workstation

2. Test Results:

The Test is concluded as: ~~PASSED~~ / FAILED
Remarks: 1. Casing vibration of KVB-TVF-01 is measured.

Checked / Tested by GCL: _____ Sam Li 11/9/25

Witnessed by: _____ Brian N.P AMMJV(ARE) 11/9/2025

Witnessed by: _____ SIU Chiu Shek CIE/TSC/2 11/9/2025

Witnessed by: _____ MICHAEL WONG CWTML. 11/9/2025

Level up the ventilation level from N35 to N36

Simulation:-
Simulate the velocity to **3.2m/s, 3.2m/s and 3.2m/s** in tunnel air flow sensors at CP1 Eastbound and the velocity **0.22m/s, 0.22m/s and 0.22m/s** in tunnel air flow sensor at CP39 Eastbound to simulate the ratio of total-out air flow to total-in air flow is more than 8%

Effect:

- KVB-TVF-01 to KVB-TVF-04 keep running but the frequency of VSD for KVB-TVF-01 to 04 rump up to the level which those fans in KVB deliver 60% air flow
- HVB-TVF-05 to HVB-TVF-06 keep running but the frequency of VSD for HVB-TVF-05 to 06 rump up to the level which those fans in HVB deliver 60% air flow
- ESP filters are still operated healthy in KVB APS plenum 3&2 and corresponding isolation dampers keep open
- ESP filters are still operated healthy in HVB APS Plenum 3 and corresponding isolation dampers keep open
- N36 mode Success post in CCMS workstation ✓

Record:

- Record the condition of above equipment status on workstation

2. Test Results:

The Test is concluded as: PASSED / FAILED
Remarks: 1. KVB Plenum 2 AMS com. fault, and causes backup mode success. 2. Casing vibration of KVB-TVF-01 is measured.

Checked / Tested by GCL: _____ Witnessed by: _____ Witnessed by: _____ Witnessed by: _____

Sam Li 11/9/25

Brian Ng AAMJV (ARE) 11/9/2025

SIU Chiu Shek CIE/TSC/2 11/9/2025

Michael Wong CWTML 11/9/2025

Level up the ventilation level from N36 to N37

Simulation:-
Simulate the velocity to **3.8m/s, 3.8m/s and 3.8m/s** in tunnel air flow sensors at CP1 Eastbound and the velocity **0.25m/s, 0.25m/s and 0.25m/s** in tunnel air flow sensor at CP39 Eastbound to simulate the ratio of total-out air flow to total-in air flow is more than 8%

Effect:

- KVB-TVF-01 to KVB-TVF-04 keep running but the frequency of VSD for KVB-TVF-01 to 04 rump up to the level which those fans in KVB deliver 70% air flow
- HVB-TVF-05 to HVB-TVF-06 keep running but the frequency of VSD for HVB-TVF-05 to 06 rump up to the level which those fans in HVB deliver 70% air flow
- ESP filters are still operated healthy in KVB APS plenum 3 and corresponding isolation dampers keep open
- ESP filters are still operated healthy in KVB APS plenum 2 and corresponding isolation dampers keep open
- ESP filters are still operated healthy in HVB APS Plenum 3 and corresponding isolation dampers keep open
- N37 mode Success post in CCMS workstation ✓

Record:

- Record the condition of above equipment status on workstation

2. Test Results:

The Test is concluded as: PASSED / FAILED
Remarks: 1. Casing vibration of KVB-TVF-01 is measured.

Checked / Tested by GCL: Sam Li 11/9/25 Witnessed by: Brian Kep AAMJV(CARE) 11/9/2025 Witnessed by: SIU Chiu Shek CIE/TSC/2 11/9/2025 Witnessed by: Michael Wong CWTML 11/9/2025

Level up the ventilation level from N37 to N38

Simulation:-
Simulate the velocity to **4.4m/s, 4.4m/s and 4.4m/s** in tunnel air flow sensors at CP1 Eastbound and the velocity **0.3m/s, 0.3m/s and 0.3m/s** in tunnel air flow sensor at CP39 Eastbound to simulate the ratio of total-out air flow to total-in air flow is more than 8%

Effect:

- KVB-TVF-01 to KVB-TVF-04 keep running but the frequency of VSD for KVB-TVF-01 to 04 rump up to the level which those fans in KVB deliver 80% air flow
- HVB-TVF-05 to HVB-TVF-06 keep running but the frequency of VSD for HVB-TVF-05 to 06 rump up to the level which those fans in HVB deliver 80% air flow
- ESP filters are still operated healthy in KVB APS plenum 3and corresponding isolation dampers keep open
- ESP filters are still operated healthy in KVB APS plenum 2 and corresponding isolation dampers keep open
- ESP filters are still operated healthy in HVB APS Plenum 3 and corresponding isolation dampers keep open
- N38 mode Success post in CCMS workstation ✓

Record:
Record the condition of above equipment status on workstation

2. Test Results:

The Test is concluded as: ~~PASSED~~ / FAILED
Remarks: 1. Casing vibration of KVB-~~TVB~~ TVF-01 is measured.

Checked / Tested by GCL: Sam Li 11/9/25 Witnessed by: Brian Ng Ainuyu (ARE) 11/9/2025 Witnessed by: SIU Chiu Shek CIE/TSC/2 11/9/2025 Witnessed by: MICHAEL WONG CWTML 11/9/2025

Level up the ventilation level from N38 to N39

Simulation:-
Simulate the velocity to **5.1m/s, 5.1m/s and 5.1m/s** in tunnel air flow sensors at CP1 Eastbound and the velocity **0.34m/s, 0.34m/s and 0.34m/s** in tunnel air flow sensor at CP39 Eastbound to simulate the ratio of total-out air flow to total-in air flow is more than 8%

Effect:

- KVB-TVF-01 to KVB-TVF-04 keep running but the frequency of VSD for KVB-TVF-01 to 04 rump up to the level which those fans in KVB deliver 90% air flow
- HVB-TVF-05 to HVB-TVF-06 keep running but the frequency of VSD for HVB-TVF-05 to 06 rump up to the level which those fans in HVB deliver 90% air flow
- ESP filters are still operated healthy in KVB APS plenum 3 and corresponding isolation dampers keep open
- ESP filters are still operated healthy in KVB APS plenum 2 and corresponding isolation dampers keep open
- ESP filters are still operated healthy in HVB APS Plenum 3 and corresponding isolation dampers keep open
- N39 mode Success post in CCMS workstation ✓

Record:
Record the condition of above equipment status on workstation

2. Test Results:

The Test is concluded as: ~~PASSED~~ / FAILED
Remarks: 1. Casing vibration of KVB-TVF-01 is measured.

Checked / Tested by GCL: Sam Li 11/9/25 Witnessed by: Brian Kep AMMJV(ARE) 11/9/2025 Witness by: SIU Chiu Shek CIE/TSC/2 11/9/2025 Witnessed by: MICHAEL WONG CWTML 11/9/2025

Level up the ventilation level from N39 to N40

Simulation:-
Simulate the velocity to **5.8m/s, 5.8m/s and 5.8m/s** in tunnel air flow sensors at CP1 Eastbound and the velocity **0.37m/s, 0.37m/s and 0.37m/s** in tunnel air flow sensor at CP39 Eastbound to simulate the ratio of total-out air flow to total-in air flow is more than 8%

Effect:

- KVB-TVF-01 to KVB-TVF-04 keep running but the frequency of VSD for KVB-TVF-01 to 04 rump up to 50Hz
- HVB-TVF-05 to HVB-TVF-06 keep running but the frequency of VSD for HVB-TVF-05 to 06 rump up to 50Hz
- ESP filters are still operated healthy in KVB APS plenum 3 and corresponding isolation dampers keep open
- ESP filters are still operated healthy in KVB APS plenum 2 and corresponding isolation dampers keep open
- ESP filters are still operated healthy in HVB APS Plenum 3 and corresponding isolation dampers keep open
- N40 mode Success post in CCMS workstation ✓

Record:

- Record the condition of above equipment status on workstation
- Record the power factor and total harmonic distortion in the meter at the building MCC and HVSB

2. Test Results:

The Test is concluded as: PASSED / FAILED
Remarks: 1. KVB-TVF-01 casing vibration is measured.

Checked / Tested by GCL: Sam Li 11/9/25 Witnessed by: Brian Kip AAMJV(ARE) 11/9/2025 Witness by: SIU Chiu Shek CIE/TSC/2 11/9/2025 Witnessed by: MICHAEL WONG CWTML 11/9/2025

Integrated Test 4- Stage 3

Level down the ventilation level from N40 to N39

Simulation:-
Simulate the velocity to 5.8m/s, 5.8m/s and 5.8m/s in tunnel air flow sensors at CP1 Eastbound and the velocity 0.35m/s, 0.35m/s and 0.35m/s in tunnel air flow sensor at CP39 Eastbound to simulate the ratio of total-out air flow to total-in air flow is less than 8%

Effect:

- KVB-TVF-03 to KVB-TVF-06 keep running but the frequency of VSD for KVB-TVF-03 to 06 rump down to the level which those fans in KVB deliver 90% air flow
- HVB-TVF-05 to HVB-TVF-06 keep running but the frequency of VSD for HVB-TVF-05 to 06 rump down to the level which those fans in HVB deliver 90% air flow
- ESP filters are still operated healthy in KVB APS plenum 2 and 1 and corresponding isolation dampers keep open
- ESP filters are still operated healthy in HVB APS Plenum 3 and corresponding isolation dampers keep open
- N39 mode Success post in CCMS workstation ✓
  ^ Backup.

Record:
Record the condition of above equipment status on workstation

2. Test Results:

The Test is concluded as: PASSED / FAILED
Remarks: 1. Casing vibration & HVB-TVF-06 is measured.

Checked / Tested by GCL: 12/9/25 Witnessed by: Brian Ng AMMJV(ARE) 12/9/2025 Witnessed by: SIU Chiu Shek CIE/TSC/2 12/9/2025 Witnessed by: MICHAEL WONG CWTML 12/9/2025

Level down the ventilation level from N39 to N38

Simulation:-
Simulate the velocity to **5.10m/s, 5.10m/s and 5.10m/s** in tunnel air flow sensors at CP1 Eastbound and the velocity **0.32m/s, 0.32m/s and 0.32m/s** in tunnel air flow sensor at CP39 Eastbound to simulate the ratio of total-out air flow to total-in air flow is less than 8%

Effect:

- KVB-TVF-03 to KVB-TVF-06 keep running but the frequency of VSD for KVB-TVF-03 to 06 rump down to the level which those fans in KVB deliver 80% air flow
- HVB-TVF-05 to HVB-TVF-06 keep running but the frequency of VSD for HVB-TVF-05 to 06 rump down to the level which those fans in HVB deliver 80% air flow
- ESP filters are still operated healthy in KVB APS plenum 2&1 and corresponding isolation dampers keep ope2
- ESP filters are still operated healthy in HVB APS Plenum 3 and corresponding isolation dampers keep open
- N38 Backup mode Success post in CCMS workstation

Record:
Record the condition of above equipment status on workstation

2. Test Results:

The Test is concluded as: PASSED / FAILED
Remarks: 1. Casing vibration & HVB-TVF-06 is measured.

Checked / Tested by GCL: Sam Li 12/9/25 Witnessed by: Brian Ng ANNUJV(ARE) 12/9/2025 Witnessed by: SIU Chiu Shek CIE/TSC/2 12/9/2025 Witnessed by: MICHAEL WONG CWTML 12/9/2025

Integrated Test 4- Stage 5

Level down the ventilation level from N38 to N37

Simulation:-
Simulate the velocity to **4.4m/s, 4.4m/s and 4.4m/s** in tunnel air flow sensors at CP1 Eastbound and the velocity **0.26m/s, 0.26m/s and 0.26m/s** in tunnel air flow sensor at CP39 Eastbound to simulate the ratio of total-out air flow to total-in air flow is less than 8%

Effect:

- KVB-TVF-03 to KVB-TVF-06 keep running but the frequency of VSD for KVB-TVF-03 to 06 rump down to the level which those fans in KVB deliver 70% air flow
- HVB-TVF-05 to HVB-TVF-06 keep running but the frequency of VSD for HVB-TVF-05 to 06 rump down to the level which those fans in HVB deliver 70% air flow
- ESP filters are still operated healthy in KVB APS plenum 2&1 and corresponding isolation dampers keep open
- ESP filters are still operated healthy in HVB APS Plenum 3 and corresponding isolation dampers keep open
- N37 mode Success post in CCMS workstation

Record: Backup.
Record the condition of above equipment status on workstation

2. Test Results:

The Test is concluded as: PASSED / FAILED
Remarks: 1. Casing Vibration of HVB-TVF-06 is measured.

Checked / Tested by GCL: Sam Li 12/9/25 Witnessed by: Brian Ng AMMJV (CRE) 12/9/2025 Witnessed by: SIU Chiu Shek CIE/TSC/2 12/9/2025 Witnessed by: MICHAEL WONG CWTML 12/9/2025

Integrated Test 4- Stage 7

Level down the ventilation level from N36 to N35

Simulation:-
Simulate the velocity to 3.2m/s, 3.2m/s and 3.2m/s in tunnel air flow sensors at CP1 Eastbound and the velocity 0.19m/s, 0.19m/s and 0.19m/s in tunnel air flow sensor at CP39 Eastbound to simulate the ratio of total-out air flow to total-in air flow is less than 8%

Effect:

- KVB-TVF-03 to KVB-TVF-06 keep running but the frequency of VSD for KVB-TVF-03 to 06 rump down to the level which those fans in KVB deliver 50% air flow
- HVB-TVF-05 to HVB-TVF-06 keep running but the frequency of VSD for HVB-TVF-05 to 02 rump up to the level which those fans in HVB deliver 50% air flow
- ESP filters are still operated healthy in KVB APS plenum 2 and 1 and corresponding isolation dampers keep open
- ESP filters are still operated healthy in HVB APS Plenum 3 and corresponding isolation dampers keep open
- N35 mode Success post in CCMS workstation ✓
  Backup

Record:
Record the condition of above equipment status on workstation

2. Test Results:

The Test is concluded as: PASSED / FAILED
Remarks:

Checked / Tested by GCL: _____ Sam Li 12/9/25 Witnessed by: _____ Brian Ng AMNOV(ARE) 12/9/2025 Witnessed by: _____ SIU Chiu Shek CIE/TSC/2 12/9/2025 Witnessed by: _____ MICHAEL WONG CWTML 12/9/2025

Level down the ventilation level from N35 to N34

Simulation:-
Simulate the velocity to **2.6m/s, 2.6m/s and 2.6m/s** in tunnel air flow sensors at CP1 Eastbound and the velocity **0.16m/s, 0.16m/s and 0.16m/s** in tunnel air flow sensor at CP39 Eastbound to simulate the ratio of total-out air flow to total-in air flow is less than 8%

Effect:

- KVB-TVF-03 to KVB-TVF-06 keep running but the frequency of VSD for KVB-TVF-03 to 06 rump down to the level which those fans in KVB deliver 50% air flow
- HVB-TVF-06 or 05 keep running and the frequency of VSD for the running fan is no change
- HVB-TVF-05 or 06 switch off
- ESP filters are still operated healthy in KVB APS plenum 2&1 and corresponding isolation dampers keep open
- ESP filters are still operated healthy in HVB APS Plenum 3 and corresponding isolation dampers keep open
- N34 Backup mode Success post in CCMS workstation ✓

Record:
Record the condition of above equipment status on workstation

2. Test Results:

The Test is concluded as: PASSED / FAILED
Remarks: 1. Casing of HVB-TVF-05 is measured.

Checked / Tested by GCL: Sam Li 12/9/25 Witnessed by: Brian Lip AMMJV(ARE) 12/9/2025 Witnessed by: SIU Chiu Shek CIE/TSC/2 12/9/2025 Witnessed by: MICHAEL WONG CWTML 12/9/2025

Level down the ventilation level from N34 to N33

Simulation:-
Simulate the velocity to 2.0m/s, 2.0m/s and 2.0m/s in tunnel air flow sensors at CP1 Eastbound and the velocity 0.12m/s, 0.12m/s and 0.12m/s in tunnel air flow sensor at CP39 Eastbound to simulate the ratio of total-out air flow to total-in air flow is less than 8%

Effect:

- KVB-TVF-03 to KVB-TVF-06, either 3 TVFs keep running and the frequency of VSD for those running fan are no change
- One TVF at KVB switch off
- HVB-TVF-06 or 05 keep running and the frequency of VSD for the running is no change
- ESP filters are still operated healthy in KVB APS plenum 2 and corresponding isolation dampers keep open
- ESP filters are still operated healthy in KVB APS plenum 1 and corresponding isolation dampers keep open
- ESP filters are still operated healthy in HVB APS Plenum 3 and corresponding isolation dampers keep open

- N33 mode Success post in CCMS workstation ✓

Backup

Record:
Record the condition of above equipment status on workstation

2. Test Results:

The Test is concluded as: PASSED / FAILED
Remarks:

Checked / Tested by GCL: Sam Li 12/9/25 Witnessed by: Bionly AAMJV(ARE) 12/9/2025 Witnessed by: SIU Chiu Shek CIE/TSC/2 12/9/2025 Witnessed by: MICHAEL WONG CWTML 12/9/2025

Integrated Test 4- Stage 9

Level down the ventilation level from N33 to N32

Simulation:-
Simulate the velocity to 1.5m/s, 1.5m/s and 1.5m/s in tunnel air flow sensors at CP1 Eastbound and the velocity 0.09m/s, 0.09m/s and 0.09m/s in tunnel air flow sensor at CP39 Eastbound to simulate the ratio of total-out air flow to total-in air flow is less than 8%

Effect:

- HVB-TVF-03 or 04 keep running and the frequency of VSD for that running fan keep the fan in HVB deliver 50% air flow
- KVB-TVF-03 to KVB-TVF-06, either 2 TVFs keep running and the frequency of VSD for those running fan are no change
- One TVF in KVB stops
- ESP filters are still operated healthy in KVB APS plenum 2 and corresponding isolation dampers keep open if any TVF serving that plenum
- ESP filters are still operated healthy in KVB APS plenum 1 and corresponding isolation dampers keep open if any TVF serving that plenum
- ESP filters switch on in HVB APS Plenum 2 and corresponding isolation dampers keep open
- N32 mode Success post in CCMS workstation ✓

Record:
Record the condition of above equipment status on workstation

2. Test Results:

The Test is concluded as: PASSED / FAILED
Remarks:

Checked / Tested by GCL: Sam Li 12/9/25 Witnessed by: Brian Lip ARE/Anhuiju 12/9/2025 Witnessed by: SIU Chiu Shek CIE/TSC/2 12/9/2025 Witnessed by: MICHAEL WONG CWTML 12/9/2025

Level down the ventilation level from N32 to N31

Simulation:-
Simulate the velocity to **0.8m/s, 0.8m/s and 0.8m/s** in tunnel air flow sensors at CP1 Eastbound and the velocity **0.05m/s, 0.05m/s and 0.05m/s** in tunnel air flow sensor at CP39 Eastbound to simulate the ratio of total-out air flow to total-in air flow is less than 8%

Effect:

- KVB-TVF-03 to KVB-TVF-06, either 2 TVFs keep running and the frequency of VSD for those running fan are no change
- ESP filters are still operated healthy in KVB APS plenum 2 and corresponding isolation dampers keep open if any TVF serving that plenum
- TVF in HVB switch off
- ESP filters are still operated healthy in KVB APS plenum 1 and corresponding isolation dampers keep open if any TVF serving that plenum
- ESP filters switch off in HVB APS Plenum 2 and corresponding isolation dampers close
- N31 mode Success post in CCMS workstation

Record:
Record the condition of above equipment status on workstation

2. Test Results:

The Test is concluded as: PASSED / FAILED
Remarks:

Checked / Tested by GCL: Sam Li 12/9/25 Witnessed by: Brian Ng AMMJV(ARE) 12/9/2025 Witnessed by: SIU Chiu Shek CIE/TSC/2 12/9/2025 Witnessed by: MICHAEL WONG CWTML 12/9/2025

Level down the ventilation level from N31 to N30

Simulation:-
Simulate the velocity to **0.5m/s, 0.5m/s and 0.5m/s** in tunnel air flow sensors at CP1 Eastbound and the velocity **0.03m/s, 0.03m/s and 0.03m/s** in tunnel air flow sensor at CP39 Eastbound to simulate the ratio of total-out air flow to total-in air flow is less than 8%

Effect:

- KVB-TVF-03 to KVB-TVF-06, either 1 TVFs keep running and the frequency of VSD for those running fan are no change
- ESP filters are still operated healthy in KVB APS plenum 2 and corresponding isolation dampers keep open if any TVF serving that plenum
- ESP filters are still operated healthy in KVB APS plenum 1 and corresponding isolation dampers keep open if any TVF serving that plenum
- N30 mode Success post in CCMS workstation ✓

Record:
Record the condition of above equipment status on workstation

2. Test Results:

The Test is concluded as: PASSED / FAILED
Remarks:

Checked / Tested by GCL: _____ 12/9/25 Sam Li

Witnessed by: _____ Brian Kep AUMJV CARE1 12/9/2025

Witnessed by: _____ SIU Chiu Shek CIE/TSC/2 12/9/2025

Witnessed by: _____ MICHAEL WONG CWTML 12/9/2025

Appendix G – Site Acceptance Test (SAT) Report for APS Removal Efficiency Test

Gammon CTA INTERNATIONAL AS

ARUP MOTT MACDONALD
Arup-Mott MacDonald Joint Venture

AIR PURIFICATION SYSTEM (APS)
Removal Efficiency Test Form

Project: Contract No. HY/2019/13 Central Kowloon Route - Buildings, Electrical and Mechanical Works

RISC NO.: For APS Commissioning Test Report
Date: 12-Sep-25

Ventilaiton Building: YVB / ~~HVB~~/ ~~KVB~~ *
APS Plenum 1

T&C Procedure Ref. No.: J3883-TVS-S-07958

Test Instruments Information

Item	Equipment	Brand	Serial No.
1	Particle Generator	PALAS	REG 1000B
2	NO2 Gas Cylinder	Scientific Gas Engineering Co., Ltd.	CP Grade
3	Nitrogen Gas Cylinder	Scientific Gas Engineering Co., Ltd.	Industrial grade
4	Test Dust	PTI	-

Air Monitoring Station Information (Manufacturer & Brand: Sapiens Environment Technology Co. Ltd)

Item	Equipment ID	Location	Supplier	Model Code	Serial No	Calibration Certificate No.
1	YVB-AMS-02	Intake of APS (Before ESP)	Sapiens	SAP-G3W5	9255C240300022	On-site_Validation_Record_YVB_pleumn
2	YVB-AMS-06	Discharge of APS (After De-NO2)	Sapiens	SAP-G2W3	9245G240300004	On-site_Validation_Record_YVB_pleumn

A. Commissioning Tests

Items	Actual Test Conditions (Reading from Air Monitoring Station)					Measured Test Result			Passing Criteria	Pass/ Fail
	Scenarios	Test Date and Time (MM/DD/YY hh:mm)		Temperature (°C)	Relative Humidity (%)	5-minute-interval-average Inlet concentration	5-minute-interval-average Outlet concentration	Removal Rate (%)		
PM10	Condition 1 inject PM10 ≥ 500 µg/m3 Condition 2 inject PM10 < 500 µg/m3	5 mins	9/12/25 17:40	28.5	83.0	166 µg/m³	2.6 µg/m³	98.4%	≤ 100 µg/m³	Pass
		10 mins	9/12/25 17:45	28.4	83.2	535.5 µg/m³	11.4 µg/m³	97.9%	≥ 80%	Pass
		15 mins	9/12/25 17:50	28.4	83.3	632.2 µg/m³	13 µg/m³	97.9%	≥ 80%	Pass
		20 mins	9/12/25 17:55	28.4	82.5	656 µg/m³	13 µg/m³	98.0%	≥ 80%	Pass
		25 mins	9/12/25 18:00	28.5	81.9	559 µg/m³	12.8 µg/m³	97.7%	≥ 80%	Pass
		30 mins	9/12/25 18:05	28.5	81.8	512 µg/m³	12 µg/m³	97.7%	≥ 80%	Pass
		35 mins	9/12/25 18:10	28.6	81.7	466.6 µg/m³	11.6 µg/m³	97.5%	≤ 100 µg/m³	Pass
		40 mins	9/12/25 18:15	28.5	81.8	362.3 µg/m³	10.2 µg/m³	97.2%	≤ 100 µg/m³	Pass
NO2	Condition 1 inject NO2 ≥ 250 ppb, Condition 2 inject NO2 < 250 ppb,	5 mins	9/12/25 11:45	28.6	82.6	109.6 ppb	6.8 ppb	93.8%	≤ 50 ppb	Pass
		10 mins	9/12/25 11:50	28.7	81.2	81.8 ppb	6.6 ppb	91.9%	≤ 50 ppb	Pass
		15 mins	9/12/25 11:55	28.7	80.9	122 ppb	8.8 ppb	92.8%	≤ 50 ppb	Pass
		20 mins	9/12/25 12:00	28.7	80.3	156.6 ppb	11.4 ppb	92.7%	≤ 50 ppb	Pass
		25 mins	9/12/25 12:05	28.7	80.1	208.2 ppb	13.2 ppb	93.7%	≤ 50 ppb	Pass
		30 mins	9/12/25 12:10	28.6	80.3	432.4 ppb	22.4 ppb	94.8%	≥ 80%	Pass
		35 mins	9/12/25 12:15	28.6	79.8	443.2 ppb	24.4 ppb	94.5%	≥ 80%	Pass
		40 mins	9/12/25 12:20	28.7	79.6	81 ppb	10.4 ppb	87.2%	≤ 50 ppb	Pass

Test Passing Criteria:

1. PM10 Inlet concentration equal to or greater than 500 µg/m3, not less than 80% of PM10 shall be removed after the air is treated by the APS.
2. PM10 Inlet concentration lower than 500 µg/m3, the outlet concentration shall not be greater than 100 µg/m3.
3. NO2 Inlet concentration equal to or greater than 250 ppb, not less than 80% of NO2 shall be removed after the air is treated by the APS.
4. NO2 Inlet concentration lower than 250 ppb, the outlet concentration shall not be greater than 50 ppb.

Tested / Checked by: (Name of CTA)	Name: Johnny Kwong	Signature:	Date: 12 Sep 2025
Witnessed by: (Name of AMMSV)	Name: Vincent Kwok	Signature:	Date: 12 Sep 2025
Witnessed by: (Name of AMMSV)	Name: Tony Tang	Signature:	Date: 12 Sep 2025
Witnessed by: (Name of AMMSV)	Name: Eric Cheng	Signature:	Date: 12-Sep-2025
Witnessed by: (Name of)	Name:	Signature:	Date:

Gammon CTA INTERNATIONAL AS CLEAN TUNNEL AIR

ARUP MOTT MACDONALD
Arup-Mott MacDonald Joint Venture

AIR PURIFICATION SYSTEM (APS)
Removal Efficiency Test Form

Project:	Contract No. HY/2019/13 Central Kowloon Route - Buildings, Electrical and Mechanical Works	RISC NO.:	For APS Commissioning Test Report
		Date:	12-Sep and 10-Oct 2025
Ventilaiton Building:	YVB / ~~HVB~~/ ~~KVB~~ *	APS Plenum	2
T&C Procedure Ref. No.:	J3883-TVS-S-07958		

Test Instruments Information

Item	Equipment	Brand	Serial No.
1	Particle Generator	PALAS	REG 1000B
2	NO2 Gas Cylinder	Scientific Gas Engineering Co., Ltd.	CP Grade
3	Nitrogen Gas Cylinder	Scientific Gas Engineering Co., Ltd.	Industrial grade
4	Test Dust	PTI	-

Air Monitoring Station Information (Manufacturer & Brand: Sapiens Environment Technology Co. Ltd)

Item	Equipment ID	Location	Supplier	Model Code	Serial No	Calibration Certificate No.
1	YVB-AMS-02	Intake of APS (Before ESP)	Sapiens	SAP-G3W5	9255C240300021	On-site_Validation_Record_YVB_pleumn
2	YVB-AMS-06	Discharge of APS (After De-NO2)	Sapiens	SAP-G2W3	9245G240300012	On-site_Validation_Record_YVB_pleumn

A. Commissioning Tests

Items	Actual Test Conditions (Reading from Air Monitoring Station)					Measured Test Result			Passing Criteria	Pass/ Fail
	Scenarios	Test Date and Time (MM/DD/YY h:mm)		Temperature (°C)	Relative Humidity (%)	5-minute-interval-average Inlet concentration	5-minute-interval-average Outlet concentration	Removal Rate (%)		
PM10	Condition 1 inject PM10 ≥ 500 µg/m3	5 mins	10/10/25 11:05	28.7	82.1	516.6 µg/m³	19.4 µg/m³	96.2%	≥ 80%	Pass
		10 mins	10/10/25 11:10	28.7	82.1	470 µg/m³	18.2 µg/m³	96.1%	≤ 100 µg/m3	Pass
		15 mins	10/10/25 11:15	28.7	82.1	525.4 µg/m³	20.8 µg/m³	96.0%	≥ 80%	Pass
		20 mins	10/10/25 11:20	28.7	82.1	581.8 µg/m³	20.8 µg/m³	96.4%	≥ 80%	Pass
		25 mins	10/10/25 11:25	28.7	82.1	563.4 µg/m³	19 µg/m³	96.6%	≥ 80%	Pass
	Condition 2 inject PM10 < 500 µg/m3	5 mins	10/10/25 11:35	28.8	82.5	302.3 µg/m³	6.1 µg/m³	98.0%	≤ 100 µg/m3	Pass
		10 mins	10/10/25 11:40	28.8	82.5	289.2 µg/m³	11.2 µg/m³	96.1%	≤ 100 µg/m3	Pass
		15 mins	10/10/25 11:45	28.8	82.5	293.7 µg/m³	11 µg/m³	96.3%	≤ 100 µg/m3	Pass
NO2	Condition 1 inject NO2 ≥ 250 ppb,	5 mins	9/12/25 14:35	28.5	82.9	105.6 ppb	10.6 ppb	90.0%	≤ 50 ppb	Pass
		10 mins	9/12/25 14:40	28.5	82.6	473 ppb	29.4 ppb	93.8%	≥ 80%	Pass
		15 mins	9/12/25 14:45	28.5	82.5	430.2 ppb	26.8 ppb	93.8%	≥ 80%	Pass
		20 mins	9/12/25 14:50	28.5	82.8	284 ppb	20.4 ppb	92.8%	≥ 80%	Pass
		25 mins	9/12/25 14:55	28.4	83.0	170 ppb	14 pob	91.8%	≤ 50 ppb	Pass
	Condition 2 inject NO2 < 250 ppb,	30 mins	9/12/25 15:00	28.4	83.0	183.6 ppb	15.8 ppb	91.4%	≤ 50 ppb	Pass
		35 mins	9/12/25 15:05	28.5	83.0	165.2 ppb	13.4 ppb	91.9%	≤ 50 ppb	Pass

Test Passing Criteria:

1. PM10 Inlet concentration equal to or greater than 500 µg/m3, not less than 80% of PM10 shall be removed after the air is treated by the APS.
2. PM10 Inlet concentration lower than 500 µg/m3, the outlet concentration shall not be greater than 100 µg/m3.
3. NO2 Inlet concentration equal to or greater than 250 ppb, not less than 80% of NO2 shall be removed after the air is treated by the APS.
4. NO2 Inlet concentration lower than 250 ppb, the outlet concentration shall not be greater than 50 ppb.

Tested / Checked by: (Name of CTA)	Name: Johnny Kwong	Signature:	Date: 10 Oct 2025
Witnessed by: (Name of AMMJV)	Name: Vincent Lande	Signature:	Date: 10 Oct 2025
Witnessed by: (Name of AMMJV)	Name: Tony Yeung	Signature:	Date: 10 Oct 2025
Witnessed by: (Name of AMMJV)	Name: Eric Chang	Signature:	Date: 10 Oct 2025
Witnessed by: (Name of)	Name:	Signature:	Date:

Gammon CTA INTERNATIONAL AS

ARUP M MOTT MACDONALD M

Arup-Mott MacDonald Joint Venture

AIR PURIFICATION SYSTEM (APS)

Removal Efficiency Test Form

Project:	Contract No. HY/2019/13 Central Kowloon Route - Buildings, Electrical and Mechanical Works	RISC NO.:	For APS Commissioning Test Report
		Date:	12-Sep and 10-Oct 2025
Ventilaiton Building:	YVB / ~~HVB~~/ ~~KVB~~ *	APS Plenum	3
T&C Procedure Ref. No.:	J3883-TVS-S-07958		

Test Instruments Information

Item	Equipment	Brand	Serial No.
1	Particle Generator	PALAS	REG 1000B
2	NO2 Gas Cylinder	Scientific Gas Engineering Co., Ltd.	CP Grade
3	Nitrogen Gas Cylinder	Scientific Gas Engineering Co., Ltd.	Industrial grade
4	Test Dust	PTI	-

Air Monitoring Station Information (Manufacturer & Brand: Sapiens Environment Technology Co. Ltd)

Item	Equipment ID	Location	Supplier	Model Code	Serial No	Calibration Certificate No.
1	YVB-AMS-02	Intake of APS (Before ESP)	Sapiens	SAP-G3W5	9255C240300014	On-site_Validation_Record_YVB_pleumn
2	YVB-AMS-06	Discharge of APS (After De-NO2)	Sapiens	SAP-G2W3	9245G240300017	On-site_Validation_Record_YVB_pleumn

A. Commissioning Tests

Item	Actual Test Conditions (Reading from Air Monitoring Station)					Measured Test Result			Passing Criteria	Pass/ Fail
	Scenarios	Test Date and Time (MM/DD/YY h:mm)		Temperature (°C)	Relative Humidity (%)	5-minute-interval-average Inlet concentration	5-minute-interval-average Outlet concentration	Removal Rate (%)		
PM10	Condition 1 inject PM10 ≥ 500 µg/m3	5 mins	10/10/25 12:05	28.5	82.7	340 µg/m³	8.5 µg/m³	97.5%	≤ 100 µg/m3	Pass
		10 mins	10/10/25 12:10	28.5	82.7	406.2 µg/m³	10.4 µg/m³	97.4%	≤ 100 µg/m3	Pass
		15 mins	10/10/25 12:15	28.5	82.7	383.8 µg/m³	9.4 µg/m³	97.6%	≤ 100 µg/m3	Pass
		20 mins	10/10/25 12:20	28.5	82.7	394 µg/m³	9 µg/m³	97.7%	≤ 100 µg/m3	Pass
	Condition 2 inject PM10 < 500 µg/m3	5 mins	10/10/25 12:30	28.8	82.5	563.7 µg/m³	5.3 µg/m³	99.1%	≥ 80%	Pass
		10 mins	10/10/25 12:35	28.8	82.5	743.8 µg/m³	11.8 µg/m³	98.4%	≥ 80%	Pass
		15 mins	10/10/25 12:40	28.8	82.5	671 µg/m³	11.5 µg/m³	98.3%	≥ 80%	Pass
NO2	Condition 1 inject NO2 ≥ 250 ppb,	5 mins	9/12/25 15:30	28.7	81.2	205.8 ppb	11 ppb	94.7%	≤ 50 ppb	Pass
		10 mins	9/12/25 15:35	28.7	80.6	352.8 ppb	21.4 ppb	93.9%	≥ 80%	Pass
		15 mins	9/12/25 15:40	28.7	80.3	346.2 ppb	22.6 ppb	93.5%	≥ 80%	Pass
		20 mins	9/12/25 15:45	28.6	80.4	242.4 ppb	14.8 ppb	93.9%	≤ 50 ppb	Pass
		25 mins	9/12/25 15:50	28.6	80.2	208.4 ppb	14 ppb	93.3%	≤ 50 ppb	Pass
	Condition 2 inject NO2 < 250 ppb,	30 mins	9/12/25 15:55	28.6	80.3	183.4 ppb	13.2 ppb	92.8%	≤ 50 ppb	Pass
		35 mins	9/12/25 16:00	28.6	80.9	177.2 ppb	13.8 ppb	92.2%	≤ 50 ppb	Pass

Test Passing Criteria:

1. PM10 Inlet concentration equal to or greater than 500 µg/m3, not less than 80% of PM10 shall be removed after the air is treated by the APS.
2. PM10 Inlet concentration lower than 500 µg/m3, the outlet concentration shall not be greater than 100 µg/m3.
3. NO2 Inlet concentration equal to or greater than 250 ppb, not less than 80% of NO2 shall be removed after the air is treated by the APS.
4. NO2 Inlet concentration lower than 250 ppb, the outlet concentration shall not be greater than 50 ppb.

Tested / Checked by: (Name of CTA)	Name: Johnny Kwong	Signature:	Date: 10 Oct 2025
Witnessed by: (Name of AMMJV)	Name: Vincent Kwok	Signature:	Date: 10 Oct 2025
Witnessed by: (Name of AMMJV)	Name: Tony Leung	Signature:	Date: 10 Oct 2025
Witnessed by: (Name of AMMJV)	Name: Eric Cheng	Signature:	Date: 10 Oct 2025
Witnessed by: (Name of)	Name:	Signature:	Date:

Gammon CTA INTERNATIONAL AS CLEAN TUNNEL AIR

ARUP M MOTT MACDONALD M

Arup-Mott MacDonald Joint Venture

AIR PURIFICATION SYSTEM (APS)

Removal Efficiency Test Form

Project:	Contract No. HY/2019/13 Central Kowloon Route - Buildings, Electrical and Mechanical Works	RISC NO.:	For APS Commissioning Test Report
		Date:	3 & 13 September 2025
Ventilaiton Building:	~~KVB~~ / HVB/ ~~KVB~~ *	APS Plenum	1
T&C Procedure Ref. No.:	J3883-TVS-S-07958		

Test Instruments Information

Item	Equipment	Brand	Serial No.
1	Particle Generator	PALAS	REG 1000B
2	NO2 Gas Cylinder	Scientific Gas Engineering Co., Ltd.	CP Grade
3	Nitrogen Gas Cylinder	Scientific Gas Engineering Co., Ltd.	Industrial grade
4	Test Dust	PTI	-

Air Monitoring Station Information (Manufacturer & Brand: Sapiens Environment Technology Co. Ltd)

Item	Equipment ID	Location	Supplier	Model Code	Serial No	Calibration Certificate No.
1	HVB-AMS-02	Intake of APS (Before ESP)	Sapiens	SAP-G3W5	9255C240300017	On-site_Validation_Record_HVB_pleumn
2	HVB-AMS-06	Discharge of APS (After De-NO2)	Sapiens	SAP-G2W3	9345G240300010	On-site_Validation_Record_HVB_pleumn

A. Commissioning Tests

Items	Actual Test Conditions (Reading from Air Monitoring Station)					Measured Test Result			Passing Criteria	Pass/ Fail
	Scenarios	Test Date and Time (DD/MM/YY h.mm)		Temperature (°C)	Relative Humidity (%)	5-minute-interval-average Inlet concentration	5-minute-interval-average Outlet concentration	Removal Rate (%)		
PM10	Condition 1 inject PM10 ≥ 500 µg/m3 Condition 2 inject PM10 < 500 µg/m3	5 mins	9/3/25 15:55	28.9	80.2	210.6 µg/m3	14.8 µg/m3	93.0%	≤ 100 µg/m3	Pass
		10 mins	9/3/25 16:00	28.9	80.1	287.6 µg/m3	14 µg/m3	95.1%	≤ 100 µg/m3	Pass
		15 mins	9/3/25 16:05	28.9	80.0	307.8 µg/m3	13.6 µg/m3	95.6%	≤ 100 µg/m3	Pass
		20 mins	9/3/25 16:10	28.9	79.7	308.4 µg/m3	14 µg/m3	95.5%	≤ 100 µg/m3	Pass
		25 mins	9/3/25 16:15	28.9	79.5	378.2 µg/m3	15.6 µg/m3	95.9%	≤ 100 µg/m3	Pass
		30 mins	9/3/25 16:20	28.9	79.2	455.4 µg/m3	12.4 µg/m3	97.3%	≤ 100 µg/m3	Pass
		35 mins	9/3/25 16:25	28.9	78.9	218 µg/m3	11.6 µg/m3	94.7%	≤ 100 µg/m3	Pass
		5 mins	9/13/25 14:10	32.4	69.1	418.4 µg/m3	8.4 µg/m3	98.0%	≤ 100 µg/m3	Pass
		10 mins	9/13/25 14:15	32.4	69.1	506.8 µg/m3	9.8 µg/m3	98.1%	≥ 80%	Pass
		15 mins	9/13/25 14:20	32.4	69.1	406.8 µg/m3	7.8 µg/m3	98.1%	≤ 100 µg/m3	Pass
NO2	Condition 1 inject NO2 ≥ 250 ppb, Condition 2 inject NO2 < 250 ppb,	5 mins	9/3/25 15:45	28.9	80.3	188.4 ppb	9.4 ppb	95.0%	≤ 50 ppb	Pass
		10 mins	9/3/25 15:50	28.9	80.3	218.4 ppb	12 ppb	94.5%	≤ 50 ppb	Pass
		15 mins	9/3/25 15:55	28.9	80.2	200.2 ppb	16.4 ppb	91.8%	≤ 50 ppb	Pass
		20 mins	9/3/25 16:00	28.9	80.1	307.2 ppb	21.8 ppb	92.9%	≥ 80%	Pass
		25 mins	9/3/25 16:05	28.9	80.0	326.8 ppb	22.2 ppb	93.2%	≥ 80%	Pass
		30 mins	9/3/25 16:10	28.9	79.7	313.8 ppb	20 ppb	93.6%	≥ 80%	Pass
		35 mins	9/3/25 16:15	28.9	79.5	239.2 ppb	6.2 ppb	97.4%	≤ 50 ppb	Pass
		40 mins	9/3/25 16:20	28.9	79.2	75.8 ppb	3.4 ppb	95.5%	≤ 50 ppb	Pass

Test Passing Criteria:

1. PM10 Inlet concentration equal to or greater than 500 µg/m3, not less than 80% of PM10 shall be removed after the air is treated by the APS.
2. PM10 Inlet concentration lower than 500 µg/m3, the outlet concentration shall not be greater than 100 µg/m3.
3. NO2 Inlet concentration equal to or greater than 250 ppb, not less than 80% of NO2 shall be removed after the air is treated by the APS.
4. NO2 Inlet concentration lower than 250 ppb, the outlet concentration shall not be greater than 50 ppb.

Tested / Checked by: (Name of CTA)	Name: Johnny Kuang	Signature:	Date: 13 Sep 2025
Witnessed by: (Name of AMMJV)	Name: Vincent Kwok	Signature:	Date: 13 Sep 2025
Witnessed by: (Name of AMMJV)	Name: Tony Yeung	Signature:	Date: 13 Sep 2025
Witnessed by: (Name of AMMJV)	Name: Eric Cheung	Signature:	Date: 13 Sep 2025
Witnessed by: (Name of)	Name:	Signature:	Date:

Gammon CTA INTERNATIONAL AS

ARUP MOTT MACDONALD

Arup-Mott MacDonald Joint Venture

AIR PURIFICATION SYSTEM (APS)

Removal Efficiency Test Form

Project:	Contract No. HY/2019/13 Central Kowloon Route - Buildings, Electrical and Mechanical Works	RISC NO.:	For APS Commissioning Test Report
		Date:	3 & 13 September 2025
Ventilaiton Building:	~~KVB~~ / HVB/ ~~KVB~~ *	APS Plenum	2
T&C Procedure Ref. No.:	J3883-TVS-S-07958		

Test Instruments Information

Item	Equipment	Brand	Serial No.
1	Particle Generator	PALAS	REG 1000B
2	NO2 Gas Cylinder	Scientific Gas Engineering Co., Ltd.	CP Grade
3	Nitrogen Gas Cylinder	Scientific Gas Engineering Co., Ltd.	Industrial grade
4	Test Dust	PTI	-

Air Monitoring Station Information (Manufacturer & Brand: Sapiens Environment Technology Co. Ltd)

Item	Equipment ID	Location	Supplier	Model Code	Serial No	Calibration Certificate No.
1	HVB-AMS-02	Intake of APS (Before ESP)	Sapiens	SAP-G3W5	9255C240300009	On-site_Validation_Record_HVB_pleumn
2	HVB-AMS-06	Discharge of APS (After De-NO2)	Sapiens	SAP-G2W3	9245G240300016	On-site_Validation_Record_HVB_pleumn

A. Commissioning Tests

Items	Actual Test Conditions (Reading from Air Monitoring Station)					Measured Test Result			Passing Criteria	Pass/ Fail
	Scenarios	Test Date and Time (MM/DD/YY h:mm)		Temperature (°C)	Relative Humidity (%)	5-minute-interval-average Inlet concentration	5-minute-interval-average Outlet concentration	Removal Rate (%)		
PM10	Condition 1 inject PM10 ≥ 500 µg/m3	5 mins	9/3/25 14:35	27.1	89.6	258.6 µg/m3	10.0 µg/m3	96.1%	≤ 100 µg/m3	Pass
		10 mins	9/3/25 14:40	27.1	89.3	302.2 µg/m3	10.8 µg/m3	96.4%	≤ 100 µg/m3	Pass
		15 mins	9/3/25 14:45	27.1	89.2	328.6 µg/m3	11.2 µg/m3	96.6%	≤ 100 µg/m3	Pass
		20 mins	9/3/25 14:50	27.1	89.1	330.2 µg/m3	11.6 µg/m3	96.5%	≤ 100 µg/m3	Pass
		25 mins	9/3/25 14:55	27.1	88.9	335.6 µg/m3	12 µg/m3	96.4%	≤ 100 µg/m3	Pass
	Condition 2 inject PM10 < 500 µg/m3	5 mins	9/13/25 10:40	27.2	88.5	27.4 µg/m3	3 µg/m3	89.1%	≤ 100 µg/m3	Pass
		10 mins	9/13/25 10:45	27.2	88.4	577.8 µg/m3	10.8 µg/m3	98.1%	≥ 80%	Pass
		15 mins	9/13/25 10:50	27.1	88.3	793.4 µg/m3	18.4 µg/m3	97.7%	≥ 80%	Pass
		20 mins	9/13/25 10:55	27.1	88.3	754.8 µg/m3	18.6 µg/m3	97.5%	≥ 80%	Pass
		25 mins	9/13/25 11:00	27.1	88.2	234.8 µg/m3	27.8 µg/m3	88.2%	≤ 100 µg/m3	Pass
NO2	Condition 1 inject NO2 ≥ 250 ppb,	5 mins	9/3/25 13:55	27.1	90.0	90 ppb	13.2 ppb	85.3%	≤ 50 ppb	Pass
		10 mins	9/3/25 14:00	27.1	90.0	167.2 ppb	21.2 ppb	87.3%	≤ 50 ppb	Pass
		15 mins	9/3/25 14:05	27.1	90.0	256.2 ppb	26.6 ppb	89.6%	≥ 80%	Pass
		20 mins	9/3/25 14:10	27.1	89.9	260 ppb	26 ppb	90.0%	≥ 80%	Pass
		25 mins	9/3/25 14:15	27.1	89.9	221.8 ppb	23.2 ppb	89.5%	≤ 50 ppb	Pass
	Condition 2 inject NO2 < 250 ppb,	30 mins	9/3/25 14:20	27.1	89.9	290.2 ppb	32 ppb	89.0%	≥ 80%	Pass
		35 mins	9/3/25 14:25	27.1	89.9	314.4 ppb	31.2 ppb	90.1%	≥ 80%	Pass
		40 mins	9/3/25 14:30	27.1	89.8	297.2 ppb	29.2 ppb	90.2%	≥ 80%	Pass
		45 mins	9/3/25 14:35	27.1	89.6	252.2 ppb	22.8 ppb	91.0%	≥ 80%	Pass
		50 mins	9/3/25 14:40	27.1	89.3	82.4 ppb	13.4 ppb	83.7%	≤ 50 ppb	Pass

Test Passing Criteria:

1. PM10 Inlet concentration equal to or greater than 500 µg/m3, not less than 80% of PM10 shall be removed after the air is treated by the APS.
2. PM10 Inlet concentration lower than 500 µg/m3, the outlet concentration shall not be greater than 100 µg/m3.
3. NO2 Inlet concentration equal to or greater than 250 ppb, not less than 80% of NO2 shall be removed after the air is treated by the APS.
4. NO2 Inlet concentration lower than 250 ppb, the outlet concentration shall not be greater than 50 ppb.

Tested / Checked by: (Name of CTA)	Name: Johnny Kwang	Signature:	Date: 13 Sep 2025
Witnessed by: (Name of AMMJV)	Name: Vincent Kwok	Signature:	Date: 13 Sep 2025
Witnessed by: (Name of AMMJV)	Name: Tony Yeung	Signature:	Date: 13 Sep 2025
Witnessed by: (Name of AMMJV)	Name: Eric Cheng	Signature:	Date: 13 Sep -2025
Witnessed by: (Name of)	Name:	Signature:	Date:

Gammon CTA INTERNATIONAL AS

ARUP MOTT MACDONALD
Arup-Mott MacDonald Joint Venture

AIR PURIFICATION SYSTEM (APS)
Removal Efficiency Test Form

Project:	Contract No. HY/2019/13 Central Kowloon Route - Buildings, Electrical and Mechanical Works	RISC NO.:	For APS Commissioning Test Report
		Date:	3 & 13 September 2025
Ventilaiton Building:	~~YVB~~ / HVB/ ~~KVB~~ *	APS Plenum	3
T&C Procedure Ref. No.:	J3883-TVS-S-07958		

Test Instruments Information

Item	Equipment	Brand	Serial No.
1	Particle Generator	PALAS	REG 1000B
2	NO2 Gas Cylinder	Scientific Gas Engineering Co., Ltd.	CP Grade
3	Nitrogen Gas Cylinder	Scientific Gas Engineering Co., Ltd.	Industrial grade
4	Test Dust	PTI	-

Air Monitoring Station Information (Manufacturer & Brand: Sapiens Environment Technology Co. Ltd)

Item	Equipment ID	Location	Supplier	Model Code	Serial No	Calibration Certificate No.
1	HVB-AMS-02	Intake of APS (Before ESP)	Sapiens	SAP-G3W5	9255C240300020	On-site_Validation_Record_HVB _pleumn
2	HVB-AMS-06	Discharge of APS (After De-NO2)	Sapiens	SAP-G2W3	9245G240300011	On-site_Validation_Record_HVB _pleumn

A. Commissioning Tests

Items	Actual Test Conditions (Reading from Air Monitoring Station)					Measured Test Result			Passing Criteria	Pass/ Fail
	Scenarios	Test Date and Time (YYM/DD/YY h:mm)		Temperature (°C)	Relative Humidity (%)	5-minute-interval-average Inlet concentration	5-minute-interval-average Outlet concentration	Removal Rate (%)		
PM10	Condition 1 inject PM10 ≥ 500 µg/m3 Condition 2 inject PM10 < 500 µg/m3	5 mins	9/3/25 10:50	27.1	89.4	122.2 µg/m3	19.6 µg/m3	84.0%	≤ 100 µg/m3	Pass
		10 mins	9/3/25 10:55	27.1	89.0	160.2 µg/m3	18.6 µg/m3	88.4%	≤ 100 µg/m3	Pass
		15 mins	9/3/25 11:00	27.1	89.1	321 µg/m3	22 µg/m3	93.1%	≤ 100 µg/m3	Pass
		20 mins	9/3/25 11:05	27.1	89.0	283.4 µg/m3	19.4 µg/m3	93.2%	≤ 100 µg/m3	Pass
		25 mins	9/3/25 11:10	27.1	89.1	238.2 µg/m3	25.2 µg/m3	89.4%	≤ 100 µg/m3	Pass
		30 mins	9/3/25 11:15	27.1	88.8	157.6 µg/m3	16.2 µg/m3	89.7%	≤ 100 µg/m3	Pass
		35 mins	9/3/25 11:20	32.1	63.3	379.6 µg/m3	12.6 µg/m3	96.7%	≤ 100 µg/m3	Pass
		5 mins	9/13/25 10:50	31.9	63.5	534.2 µg/m3	16 µg/m3	97.0%	≥ 80%	Pass
		10 mins	9/13/25 10:55	31.8	63.5	552.2 µg/m3	16.2 µg/m3	97.1%	≥ 80%	Pass
		15 mins	9/13/25 11:00	31.7	63.7	235 µg/m3	11.8 µg/m3	95.0%	≤ 100 µg/m3	Pass
NO2	Condition 1 inject NO2 ≥ 250 ppb, Condition 2 inject NO2 < 250 ppb,	5 mins	9/3/25 10:45	27.1	89.5	237 ppb	28.2 ppb	88.1%	≤ 50 ppb	Pass
		10 mins	9/3/25 10:50	27.1	89.4	379.2 ppb	41.8 ppb	89.0%	≥ 80%	Pass
		15 mins	9/3/25 10:55	27.1	89.0	273.8 ppb	35.4 ppb	87.1%	≥ 80%	Pass
		20 mins	9/3/25 11:00	27.1	89.1	136.4 ppb	21.2 ppb	84.5%	≤ 50 ppb	Pass
		25 mins	9/3/25 11:05	27.1	89.0	160.4 ppb	22.8 ppb	85.8%	≤ 50 ppb	Pass
		30 mins	9/3/25 11:10	27.1	89.1	103.8 ppb	19.4 ppb	81.3%	≤ 50 ppb	Pass
		35 mins	9/3/25 11:15	27.1	88.8	120.6 ppb	19.8 ppb	83.6%	≤ 50 ppb	Pass
		40 mins	9/3/25 11:20	27.2	88.8	142.4 ppb	21.6 ppb	84.8%	≤ 50 ppb	Pass

Test Passing Criteria:

1. PM10 Inlet concentration equal to or greater than 500 µg/m3, not less than 80% of PM10 shall be removed after the air is treated by the APS.
2. PM10 Inlet concentration lower than 500 µg/m3, the outlet concentration shall not be greater than 100 µg/m3.
3. NO2 Inlet concentration equal to or greater than 250 ppb, not less than 80% of NO2 shall be removed after the air is treated by the APS.
4. NO2 Inlet concentration lower than 250 ppb, the outlet concentration shall not be greater than 50 ppb.

Tested / Checked by: (Name of CTA)	Name: Johnny Kwang	Signature:	Date: 13 Sep 2025
Witnessed by: (Name of AMMJV)	Name: Vincent Kwok	Signature:	Date: 13 Sep 2025
Witnessed by: (Name of AMMJV)	Name: Tony Yeung	Signature:	Date: 13 Sep 2025
Witnessed by: (Name of AMMJV)	Name: Eric Cheng	Signature:	Date: 13-Sep-2025
Witnessed by: (Name of)	Name:	Signature:	Date:

Gammon CTA INTERNATIONAL AS

ARUP MOTT MACDONALD
Arup-Mott MacDonald Joint Venture

AIR PURIFICATION SYSTEM (APS)
Removal Efficiency Test Form

Project:	Contract No. HY/2019/13 Central Kowloon Route - Buildings, Electrical and Mechanical Works	RISC NO.:	For APS Commissioning Test Report
		Date:	10 & 29 September 2025
Ventilaiton Building:	~~YVB~~ / ~~HVB~~ / KVB *	APS Plenum	1
T&C Procedure Ref. No.:	J3883-TVS-S-07958		

Test Instruments Information

Item	Equipment	Brand	Serial No.
1	Particle Generator	PALAS	REG 1000B
2	NO2 Gas Cylinder	Scientific Gas Engineering Co., Ltd.	CP Grade
3	Nitrogen Gas Cylinder	Scientific Gas Engineering Co., Ltd.	Industrial grade
4	Test Dust	PTI	-

Air Monitoring Station Information (Manufacturer & Brand: Sapiens Environment Technology Co. Ltd)

Item	Equipment ID	Location	Supplier	Model Code	Serial No	Calibration Certificate No.
1	KVB-AMS-02	Intake of APS (Before ESP)	Sapiens	SAP-G3W5	9255C240300011	On-site_Validation_Record_KVB_pleumn
2	KVB-AMS-06	Discharge of APS (After De-NO2)	Sapiens	SAP-G2W3	9245G24030005	On-site_Validation_Record_KVB_pleumn

A. Commissioning Tests

Items	Actual Test Conditions (Reading from Air Monitoring Station)					Measured Test Result			Passing Criteria	Pass/ Fail
	Scenarios	Test Date and Time (MM/DD/YY h:mm)		Temperature (°C)	Relative Humidity (%)	5-minute-interval-average Inlet concentration	5-minute-interval-average Outlet concentration	Removal Rate (%)		
PM10	Condition 1 inject PM10 ≥ 500 µg/m3	5 mins	9/10/25 12:10	28.7	82.9	322.2 µg/m3	1.9 µg/m3	94.1%	≤ 100 µg/m3	Pass
		10 mins	9/10/25 12:15	28.7	82.5	342.4 µg/m3	17.4 µg/m3	94.9%	≤ 100 µg/m3	Pass
		15 mins	9/10/25 12:20	28.8	81.6	360.6 µg/m3	20.6 µg/m3	94.3%	≤ 100 µg/m3	Pass
		20 mins	9/10/25 12:25	28.9	80.4	325.2 µg/m3	14.2 µg/m3	95.6%	≤ 100 µg/m3	Pass
		25 mins	9/10/25 12:30	29.0	80.8	305 µg/m3	16.2 µg/m3	94.7%	≤ 100 µg/m3	Pass
	Condition 2 inject PM10 < 500 µg/m3	5 mins	9/29/25 11:20	28.0	88.5	518.4 µg/m3	14.4 µg/m3	97.2%	≥ 80%	Pass
		10 mins	9/29/25 11:25	28.0	88.5	621.8 µg/m3	16.2 µg/m3	97.4%	≥ 80%	Pass
		15 mins	9/29/25 11:30	28.0	88.1	646.8 µg/m3	16.8 µg/m3	97.4%	≥ 80%	Pass
		20 mins	9/29/25 11:35	28.1	86.6	611.6 µg/m3	24.2 µg/m3	96.0%	≥ 80%	Pass
		25 mins	9/29/25 11:40	28.2	85.7	539.4 µg/m3	26 µg/m3	95.2%	≥ 80%	Pass
NO2	Condition 1 inject NO2 ≥ 250 ppb,	5 mins	9/10/25 12:10	28.7	82.9	118.2 ppb	16.0 ppb	86.5%	≤ 50 ppb	Pass
		10 mins	9/10/25 12:15	28.7	82.5	224.8 ppb	24.2 ppb	89.2%	≤ 50 ppb	Pass
		15 mins	9/10/25 12:20	28.8	81.6	394.2 ppb	35.4 ppb	91.0%	≥ 80%	Pass
		20 mins	9/10/25 12:25	28.9	80.4	606.6 ppb	53.4 ppb	91.2%	≥ 80%	Pass
		25 mins	9/10/25 12:30	29.0	80.8	420.8 ppb	39 ppb	90.7%	≥ 80%	Pass
		30 mins	9/10/25 12:35	28.9	80.5	192.4 ppb	22.2 ppb	88.5%	≤ 50 ppb	Pass
		35 mins	9/10/25 12:40	29.0	80.1	162.4 ppb	19.4 ppb	88.1%	≤ 50 ppb	Pass
		40 mins	9/10/25 12:45	28.8	81.1	182.8 ppb	21.8 ppb	88.1%	≤ 50 ppb	Pass
	Condition 2 inject NO2 < 250 ppb,									

Test Passing Criteria:

1. PM10 Inlet concentration equal to or greater than 500 µg/m3, not less than 80% of PM10 shall be removed after the air is treated by the APS.
2. PM10 Inlet concentration lower than 500 µg/m3, the outlet concentration shall not be greater than 100 µg/m3.
3. NO2 Inlet concentration equal to or greater than 250 ppb, not less than 80% of NO2 shall be removed after the air is treated by the APS.
4. NO2 Inlet concentration lower than 250 ppb, the outlet concentration shall not be greater than 50 ppb.

Tested / Checked by: (Name of CTA)	Name: Johnny Kwang	Signature:	Date: 29 Sep 2025
Witnessed by: (Name of AMMJV)	Name: Vincent Kwok	Signature:	Date: 29 Sep 2025
Witnessed by: (Name of AMMJV)	Name: Tony Yeung	Signature:	Date: 29 Sep 2025
Witnessed by: (Name of AMMJV)	Name: Eric Cheng	Signature:	Date: 29 Sep 2025
Witnessed by: (Name of)	Name:	Signature:	Date:

Gammon CTA INTERNATIONAL AS CLEAN TUNNEL AIR

ARUP MOTT MACDONALD

Arup-Mott MacDonald Joint Venture

AIR PURIFICATION SYSTEM (APS)
Removal Efficiency Test Form

Project: Contract No. HY/2019/13 Central Kowloon Route - Buildings, Electrical and Mechanical Works

RISC NO.: For APS Commissioning Test Report

Date: 10, 19 & 29 September 2025

Ventilaiton Building: ~~YVB~~ / ~~HVB~~ / KVB *

APS Plenum 2

T&C Procedure Ref. No.: J3883-TVS-S-07958

Test Instruments Information

Item	Equipment	Brand	Serial No.
1	Particle Generator	PALAS	REG 1000B
2	NO2 Gas Cylinder	Scientific Gas Engineering Co., Ltd.	CP Grade
3	Nitrogen Gas Cylinder	Scientific Gas Engineering Co., Ltd.	Industrial grade
4	Test Dust	PTI	-

Air Monitoring Station Information (Manufacturer & Brand: Sapiens Environment Technology Co. Ltd)

Item	Equipment ID	Location	Supplier	Model Code	Serial No	Calibration Certificate No.
1	KVB-AMS-02	Intake of APS (Before ESP)	Sapiens	SAP-G3W5	9255C240300025	On-site_Validation_Record_KVB_pleumn
2	KVB-AMS-06	Discharge of APS (After De-NO2)	Sapiens	SAP-G2W3	9245G240300014	On-site_Validation_Record_KVB_pleumn

A. Commissioning Tests

Items	Actual Test Conditions (Reading from Air Monitoring Station)					Measured Test Result			Passing Criteria	Pass/ Fail
	Scenarios	Test Date and Time (MM/DD/YY h:mm)		Temperature (°C)	Relative Humidity (%)	5-minute-interval-average Inlet concentration	5-minute-interval-average Outlet concentration	Removal Rate (%)		
PM10	Condition 1 inject PM10 ≥ 500 µg/m3	5 mins	9/19/25 11:40	27.4	84.2	714 µg/m3	27.8 µg/m3	96.1%	≥ 80%	Pass
		10 mins	9/19/25 11:45	27.4	84.1	597.6 µg/m3	26 µg/m3	95.6%	≥ 80%	Pass
		15 mins	9/19/25 11:50	27.4	84.0	608 µg/m3	26.6 µg/m3	95.6%	≥ 80%	Pass
		20 mins	9/19/25 11:55	27.4	84.0	615 µg/m3	24.8 µg/m3	96.0%	≥ 80%	Pass
		25 mins	9/19/25 12:00	27.4	84.0	614.2 µg/m3	25.8 µg/m3	95.8%	≥ 80%	Pass
	Condition 2 inject PM10 < 500 µg/m3	5 mins	9/29/25 14:20	28.2	85.8	248.6 µg/m3	18.6 µg/m3	92.5%	≤ 100 µg/m3	Pass
		10 mins	9/29/25 14:25	28.3	85.8	384.2 µg/m3	24.2 µg/m3	93.7%	≤ 100 µg/m3	Pass
		15 mins	9/29/25 14:30	28.3	85.6	371 µg/m3	24.8 µg/m3	93.3%	≤ 100 µg/m3	Pass
		20 mins	9/29/25 14:35	28.3	85.6	361.8 µg/m3	24.2 µg/m3	93.3%	≤ 100 µg/m3	Pass
		25 mins	9/29/25 14:40	28.4	85.5	381 µg/m3	20.8 µg/m3	94.5%	≤ 100 µg/m3	Pass
NO2	Condition 1 inject NO2 ≥ 250 ppb,	5 mins	9/10/25 15:00	28.8	80.9	134.8 ppb	13.2 ppb	90.2%	≤ 50 ppb	Pass
		10 mins	9/10/25 15:05	28.9	80.7	251.8 ppb	29 ppb	88.5%	≥ 80%	Pass
		15 mins	9/10/25 15:10	28.9	80.6	284.6 ppb	34.8 ppb	87.8%	≥ 80%	Pass
		20 mins	9/10/25 15:15	28.9	80.5	251 ppb	32 ppb	87.3%	≥ 80%	Pass
		25 mins	9/10/25 15:20	29.0	80.7	284.6 ppb	34.8 ppb	87.8%	≥ 80%	Pass
		30 mins	9/10/25 15:25	29.0	80.7	319.6 ppb	40.2 ppb	87.4%	≥ 80%	Pass
	Condition 2 inject NO2 < 250 ppb,	35 mins	9/10/25 15:30	28.9	81.1	245.2 ppb	35 ppb	85.7%	≤ 50 ppb	Pass
		40 mins	9/10/25 15:35	29.0	81.3	169 ppb	23.4 ppb	86.2%	≤ 50 ppb	Pass

Test Passing Criteria:

1. PM10 Inlet concentration equal to or greater than 500 µg/m3, not less than 80% of PM10 shall be removed after the air is treated by the APS.
2. PM10 Inlet concentration lower than 500 µg/m3, the outlet concentration shall not be greater than 100 µg/m3.
3. NO2 Inlet concentration equal to or greater than 250 ppb, not less than 80% of NO2 shall be removed after the air is treated by the APS.
4. NO2 Inlet concentration lower than 250 ppb, the outlet concentration shall not be greater than 50 ppb.

Tested / Checked by: (Name of CTA)	Name: Johnny Kwang	Signature:	Date: 29 Sep 2025
Witnessed by: (Name of AMMJV)	Name: Vincent Kwok	Signature:	Date: 29 Sep 2025
Witnessed by: (Name of AMMJV)	Name: Tony Yeung	Signature:	Date: 29 Sep 2025
Witnessed by: (Name of AMMJV)	Name: Eric Chang	Signature:	Date: 29 Sep 2025
Witnessed by: (Name of)	Name:	Signature:	Date:

Gammon CTA INTERNATIONAL AS

ARUP MOTT MACDONALD
Arup-Mott MacDonald Joint Venture

AIR PURIFICATION SYSTEM (APS)
Removal Efficiency Test Form

Project: Contract No. HY/2019/13 Central Kowloon Route - Buildings, Electrical and Mechanical Works

RISC NO.: For APS Commissioning Test Report
Date: 10 & 29 September 2025

Ventilaiton Building: ~~KVB~~ / ~~HVB~~ / KVB *
APS Plenum 3

T&C Procedure Ref. No.: J3883-TVS-S-07958

Test Instruments Information

Item	Equipment	Brand	Serial No.
1	Particle Generator	PALAS	REG 1000B
2	NO2 Gas Cylinder	Scientific Gas Engineering Co., Ltd.	CP Grade
3	Nitrogen Gas Cylinder	Scientific Gas Engineering Co., Ltd.	Industrial grade
4	Test Dust	PTI	-

Air Monitoring Station Information (Manufacturer & Brand: Sapiens Environment Technology Co. Ltd)

Item	Equipment ID	Location	Supplier	Model Code	Serial No	Calibration Certificate No.
1	KVB-AMS-02	Intake of APS (Before ESP)	Sapiens	SAP-G3W5	9255C240300013	On-site_Validation_Record_KVB_pleumn
2	KVB-AMS-06	Discharge of APS (After De-NO2)	Sapiens	SAP-G2W3	9245G240300013	On-site_Validation_Record_KVB_pleumn

A. Commissioning Tests

Items	Actual Test Conditions (Reading from Air Monitoring Station)				Measured Test Result			Passing Criteria	Pass/ Fail
	Scenarios	Test Date and Time (MM/DD/YY h.mm)	Temperature (°C)	Relative Humidity (%)	5-minute-interval-average Inlet concentration	5-minute-interval-average Outlet concentration	Removal Rate (%)		
PM10	Condition 1 inject PM10 ≥ 1000 µg/m3	5 mins 9/10 ~~10/29~~/25 16:35	28.4	85.3	337.8 µg/m3	20.6 µg/m3	93.9%	≤ 100 µg/m3	Pass
		10 mins 9/10 ~~10/29~~/25 16:40	28.4	84.7	359 µg/m3	18.6 µg/m3	94.8%	≤ 100 µg/m3	Pass
		15 mins 9/10 ~~10/29~~/25 16:45	28.3	84.7	354.2 µg/m3	17 µg/m3	95.2%	≤ 100 µg/m3	Pass
		20 mins 9/10 ~~10/29~~/25 16:50	28.4	84.0	372 µg/m3	17.8 µg/m3	95.2%	≤ 100 µg/m3	Pass
		25 mins 9/10 ~~10/29~~/25 16:55	28.4	84.2	364.6 µg/m3	17 µg/m3	95.3%	≤ 100 µg/m3	Pass
	Condition 2 inject PM10 < 1000 µg/m3	30 mins 9/10 ~~10/29~~/25 17:00	28.4	83.0	224.8 µg/m3	13.8 µg/m3	93.9%	≤ 100 µg/m3	Pass
		5 mins 9/29/25 11:10	28.1	87.5	700.4 µg/m3	17 µg/m3	97.6%	≥ 80%	Pass
		10 mins 9/29/25 11:55	28.2	86.8	740 µg/m3	16.6 µg/m3	97.8%	≥ 80%	Pass
		15 mins 9/29/25 12:00	28.3	85.8	1000.2 µg/m3	20.2 µg/m3	96.0%	≥ 80%	Pass
		20 mins 9/29/25 12:05	28.4	85.1	456.8 µg/m3	21.8 µg/m3	95.2%	≤ 100 µg/m3	Pass
NO2	Condition 1 inject NO2 ≥ 2100 ppb,	5 mins 9/10 ~~10/29~~/25 16:45	28.4	85.3	229.8 ppb	13.2 ppb	94.3%	≤ 50 ppb	Pass
		10 mins 9/10 ~~10/29~~/25 16:50	28.4	84.7	258 ppb	16 ppb	93.8%	≥ 80%	Pass
		15 mins 9/10 ~~10/29~~/25 16:55	28.3	84.7	296.2 ppb	18 ppb	93.9%	≥ 80%	Pass
		20 mins 9/10 ~~10/29~~/25 17:00	28.4	84.0	264.8 ppb	18 ppb	93.2%	≥ 80%	Pass
		25 mins 9/10 ~~10/29~~/25 17:05	28.4	84.2	144.6 ppb	12.2 ppb	91.6%	≤ 50 ppb	Pass
	Condition 2 inject NO2 < 2100 ppb,	30 mins 9/10 ~~10/29~~/25 17:10	28.4	83.0	123.8 ppb	10.8 ppb	91.3%	≤ 50 ppb	Pass
		35 mins 9/10 ~~10/29~~/25 17:15	28.4	82.5	118.8 ppb	10.6 ppb	91.1%	≤ 50 ppb	Pass

Test Passing Criteria:

1. PM10 Inlet concentration equal to or greater than 500 µg/m3, not less than 80% of PM10 shall be removed after the air is treated by the APS.
2. PM10 Inlet concentration lower than 500 µg/m3, the outlet concentration shall not be greater than 100 µg/m3.
3. NO2 Inlet concentration equal to or greater than 250 ppb, not less than 80% of NO2 shall be removed after the air is treated by the APS.
4. NO2 Inlet concentration lower than 250 ppb, the outlet concentration shall not be greater than 50 ppb.

Tested / Checked by: (Name of CTA)	Name: Johnny Kwong	Signature:	Date: 29 Sep 2025
Witnessed by: (Name of AMMJV)	Name: Vincent Kwok	Signature:	Date: 29 Sep 2025
Witnessed by: (Name of AMMJV)	Name: Tony Yeung	Signature:	Date: 29 Sep 2025
Witnessed by: (Name of AMMJV)	Name: Eric Cheng	Signature:	Date: 29 Sep 2025
Witnessed by: (Name of)	Name:	Signature:	Date:

Appendix H – Calibration Certificate for Air Monitoring Stations

AMS Testing and Commissioning Record

SAPIENS

MAS Model	MAS-AF300
Report ID	Onsite Validation Record_YVB_Plenum
Test date	2025-08-14 to 2025-08-16
Report Date	2025-08-19
Version	1.1

Description

Sapiens Sensor AMS has implemented the state-of-the-art air sensing technology to provide its users reliable and near-reference air quality data. It is designed with strict Quality Assurance and Quality Control (QA/QC) schemes to achieve the fit-for-purpose and accurate measurement results to attain different data quality objectives fit for professional applications.
All units have already been calibrated at the factory, however, considering of the transportation from factory to site, all the devices shall be further verified on- site prior to tunnel commissioning.

Traceability of Reference Instrument:

As a key QAQC tool, Sapiens Sensor Calibration Kit is designed to provide traceable gas of known concentration at ambient humidity and PM standards to calibrate Sapiens sensor products during the field operation. The model for the instruments is listed below.
1) Portable Sensor Calibrator (PSC) for targeting standard gas during onsite validation work;
2) Portable Aerosol Generator (PAG) generate stable flow and concentration of particulate matters with range of sizes simultaneously.

Pollutant	Calibration Instruments	Model	Serial No.
NO	Portable Sensor Calibrator	PSC-100	9913Z230700001
NO_2	Portable Sensor Calibrator		
O_3	Portable Sensor Calibrator		
CO	Portable Sensor Calibrator	PSC-200	9913Z250400001
CO_2	Portable Sensor Calibrator		
PM	Portable Aerosol Generator	PAG-100	9916Z240100001

Installation location and device ID information section

Air Purification System	Location	Serial No. of MAS
YVB_Plenum 1	Before ESP	~~9225A240300024 (SAP-G1W0)~~ 9255C240300022 (SAP-G3W5)
	Between ESP & DE-NO_2 filter	~~9225A240300029 (SAP-G1W0)~~ 9255C240300015 (SAP-G3W5)
	After DE-NO_2 filter	~~9225A240300010 (SAP-G1W0)~~ 9245G240300004 (SAP-G2W3)
YVB_Plenum 2	Before ESP	~~9225A240300032 (SAP-G1W0)~~ 9255C240300021 (SAP-G3W5)
	Between ESP & DE-NO_2 filter	~~9225A240300009 (SAP-G1W0)~~ 9255C240300023 (SAP-G3W5)
	After DE-NO_2 filter	~~9225A240300030 (SAP-G1W0)~~ 9245G240300012 (SAP-G2W3)
YVB_Plenum 3	Before ESP	~~9225A240300002 (SAP-G1W0)~~ 9255C240300014 (SAP-G3W5)
	Between ESP & DE-NO_2 filter	~~9225A240300036~~ (SAP-G1W0) 9255C240300006 (SAP-G3W5)
	After DE-NO_2 filter	~~9225A240300031 (SAP-G1W0)~~ 9245G240300017 (SAP-G2W3)

Data quality passing criteria of AMS

Parameters	Passing criteria
NO	± [5] % or ± [5] ppb, whichever greater
NO_2	± [5] % or ± [5] ppb, whichever greater

Parameters	Passing criteria
CO	± [5] %
CO_2	± [5] %
O_3	± [5] % or ± [5] ppb, whichever greater
PM_1	± [15] % or ± [5] μg/m^3, whichever greater
$PM_{2.5}$	± [15] % or ± [5] μg/m^3, whichever greater
PM_{10}	± [15] % or ± [5] μg/m^3, whichever greater
Temperature	± 1℃
Humidity	± 3% RH
Pressure	± 1 hPa

Validation Results Details of Plenum 1

1. AMS before ESP

1.1. Gas validation Data

No.9225A240300024 (SAP-G1W0)								
Validation cycle	QA assessment: NO: 0 ppb, 400 ppb and 800 ppb				QC procedure: NO: 400 ppb			
Passing criteria	± [5] % or ± [5] ppb				± [5] % or ± [5] ppb			
Steps	Reading [ppb]	Error [ppb]	Error [%]	Result	Reading [ppb]	Error [ppb]	Error [%]	Result
NO-0 ppb	1.0	1.0	/	☑ PASS ☐ FAIL	/	/	/	☐ PASS ☐ FAIL
*NO-400 ppb	406.9	6.9	1.72	☑ PASS ☐ FAIL				
NO-800 ppb	802.1	2.1	0.26	☑ PASS ☐ FAIL				
Validation cycle	QA assessment: NO_2: 0 ppb, 100ppb and 200 ppb				QC procedure: NO_2: 100 ppb			
Passing criteria	± [5] % or ± [5] ppb				± [5] % or ± [5] ppb			
Steps	Reading [ppb]	Error [ppb]	Error [%]	Result	Reading [ppb]	Error [ppb]	Error [%]	Result
NO_2-0 ppb	1.0	1.0	/	☑ PASS ☐ FAIL	/	/	/	☐ PASS ☐ FAIL
*NO_2-100 ppb	100.9	0.9	0.90	☑ PASS ☐ FAIL				
NO_2-200 ppb	200.4	0.4	0.20	☑ PASS ☐ FAIL				

Note: Normally step 2 (*) is not required for QA checking.

No.9255C240300022 (SAP-G3W5)								
Validation cycle	QA assessment: NO: 0 ppb, 400 ppb and 800 ppb				QC procedure: NO: 400 ppb			
Passing criteria	± [5] % or ± [5] ppb				± [5] % or ± [5] ppb			
Steps	Reading [ppb]	Error [ppb]	Error [%]	Result	Reading [ppb]	Error [ppb]	Error [%]	Result
NO-0 ppb	1.0	1.0	/	☑ PASS ☐ FAIL	/	/	/	☐ PASS ☐ FAIL
*NO-400 ppb	413.4	13.4	3.35	☑ PASS ☐ FAIL				
NO-800 ppb	817.8	17.8	2.22	☑ PASS ☐ FAIL				
Validation cycle	QA assessment: NO_2: 0 ppb, 100ppb and 200 ppb				QC procedure: NO_2: 100 ppb			
Passing criteria	± [5] % or ± [5] ppb				± [5] % or ± [5] ppb			
Steps	Reading [ppb]	Error [ppb]	Error [%]	Result	Reading [ppb]	Error [ppb]	Error [%]	Result
NO_2-0 ppb	1.0	1.0	/	☑ PASS ☐ FAIL	/	/	/	☐ PASS ☐ FAIL
*NO_2-100 ppb	100.7	0.7	0.70	☑ PASS ☐ FAIL				
NO_2-200 ppb	200.6	0.6	0.30	☑ PASS ☐ FAIL				
Validation cycle	QA assessment: CO: 1 ppm, 2.5 ppm and 5 ppm				QC procedure: CO: 2.5 ppm			
Passing criteria	± [5] %				± [5] %			
Steps	Reading [ppm]	Error [ppm]	Error [%]	Result	Reading [ppm]	Error [ppm]	Error [%]	Result
CO-1 ppm	1.04	0.04	4.00	☑ PASS ☐ FAIL	/	/	/	☐ PASS ☐ FAIL
*CO-2.5 ppm	2.44	-0.06	-2.40	☑ PASS ☐ FAIL				
CO-5 ppm	4.84	-0.16	-3.20	☑ PASS ☐ FAIL				
Validation cycle	QA assessment: CO_2: 1000 ppm, 2500 ppm and 5000 ppm				QC procedure: CO_2: 2500 ppm			
Passing criteria	± [5] %				± [5] %			
Steps	Reading [ppm]	Error [ppm]	Error [%]	Result	Reading [ppm]	Error [ppm]	Error [%]	Result
CO_2-1000 ppm	1013.65	13.65	1.37	☑ PASS ☐ FAIL	/	/	/	☐ PASS ☐ FAIL
*CO_2-2500 ppm	2559.55	59.55	2.38	☑ PASS ☐ FAIL				

CO_2-5000 ppm	5228.41	228.41	4.57	☑ PASS ☐ FAIL				
Validation cycle	QA assessment: O_3: 0 ppb, 100 ppb, 100 ppb and 200 ppb				QC procedure: O_3: 100 ppb			
Passing criteria	± [5] % or ± [5] ppb				± [5] % or ± [5] ppb			
Steps	Reading [ppb]	Error [ppb]	Error [%]	Result	Reading [ppb]	Error [ppb]	Error [%]	Result
O_3-0 ppb	1.0	1.0	/	☑ PASS ☐ FAIL	/	/	/	☐ PASS ☐ FAIL
*O_3-100 ppb	101.0	1.0	1.00	☑ PASS ☐ FAIL				
O_3-200 ppb	204.7	4.7	2.35	☑ PASS ☐ FAIL				

Note: Normally step 2 (*) is not required for QA checking.

1.2. PM validation Data

No.9225A240300024 (SAP-G1W0)								
Validation cycle	QA assessment: PM_1				QC procedure: PM_1: /			
Passing criteria	± [15] % or ± [5] μg/m³				± [15] % or ± [5] μg/m³			
TS Average [μg/m³]	Reading [μg/m³]	Error [μg/m³]	Error [%]	Result	Reading [μg/m³]	Error [μg/m³]	Error [%]	Result
PM_1-0 μg/m³	0	0	/	☑ PASS ☐ FAIL	/	/	/	☐ PASS ☐ FAIL
*PM_1-20.4μg/m³	17.6	-2.8	-13.73	☑ PASS ☐ FAIL				
PM_1-43.7μg/m³	41.3	-2.4	-5.49	☑ PASS ☐ FAIL				
Validation cycle	QA assessment: $PM_{2.5}$				QC procedure: $PM_{2.5}$: /			
Passing criteria	± [15] % or ± [5] μg/m³				± [15] % or ± [5] μg/m³			
TS Average [μg/m³]	Reading [μg/m³]	Error [μg/m³]	Error [%]	Result	Reading [μg/m³]	Error [μg/m³]	Error [%]	Result
$PM_{2.5}$-0 μg/m³	0.1	0.1	/	☑ PASS ☐ FAIL	/	/	/	☐ PASS ☐ FAIL
*$PM_{2.5}$-29.5μg/m³	25.4	-4.1	-13.90	☑ PASS ☐ FAIL				
$PM_{2.5}$-75.4μg/m³	80.2	4.8	6.37	☑ PASS ☐ FAIL				
Validation cycle	QA assessment: PM_{10}				QC procedure: PM_{10}: /			
Passing criteria	± [15] % or ± [5] μg/m³				± [15] % or ± [5] μg/m³			
TS Average [μg/m³]	Reading [μg/m³]	Error [μg/m³]	Error [%]	Result	Reading [μg/m³]	Error [μg/m³]	Error [%]	Result
PM_{10}-0 μg/m³	0.2	0.2	/	☑ PASS ☐ FAIL	/	/	/	☐ PASS ☐ FAIL
*PM_{10}-57.7μg/m³	51	-6.7	-11.61	☑ PASS ☐ FAIL				
PM_{10}-121.5μg/m³	125	3.5	2.88	☑ PASS ☐ FAIL				

Note: 1. For PM validation, the reading of transfer standard (TS) will be used as reference. TS Average sourced from MAS-AF300 (N0.9255C240100002). 2. Normally step 2 (*) is not required for QA checking.

No.9255C240300022 (SAP-G3W5)								
Validation cycle	QA assessment: PM_1				QC procedure: PM_1: /			
Passing criteria	± [15] % or ± [5] μg/m³				± [15] % or ± [5] μg/m³			
TS Average [μg/m³]	Reading [μg/m³]	Error [μg/m³]	Error [%]	Result	Reading [μg/m³]	Error [μg/m³]	Error [%]	Result
PM_1-0 μg/m³	0	0	/	☑ PASS ☐ FAIL	/	/	/	☐ PASS ☐ FAIL
*PM_1-17.3μg/m³	19.4	2.1	12.14	☑ PASS ☐ FAIL				
PM_1-38.7μg/m³	42.5	3.8	9.82	☑ PASS ☐ FAIL				
Validation cycle	QA assessment: $PM_{2.5}$				QC procedure: $PM_{2.5}$: /			
Passing criteria	± [15] % or ± [5] μg/m³				± [15] % or ± [5] μg/m³			
TS Average [μg/m³]	Reading [μg/m³]	Error [μg/m³]	Error [%]	Result	Reading [μg/m³]	Error [μg/m³]	Error [%]	Result

$PM_{2.5}$-0 μg/m³	0	0	/	☑ PASS ☐ FAIL	/	/	/	☐ PASS ☐ FAIL
*$PM_{2.5}$-26.3μg/m³	29.7	3.4	12.93	☑ PASS ☐ FAIL				
$PM_{2.5}$-64.5μg/m³	72.8	8.3	12.87	☑ PASS ☐ FAIL				
Validation cycle	QA assessment: PM_{10}				QC procedure: PM_{10}: /			
Passing criteria	± [15] % or ± [5] μg/m³				± [15] % or ± [5] μg/m³			
TS Average [μg/m³]	Reading [μg/m³]	Error [μg/m³]	Error [%]	Result	Reading [μg/m³]	Error [μg/m³]	Error [%]	Result
PM_{10}-0 μg/m³	0	0	/	☑ PASS ☐ FAIL	/	/	/	☐ PASS ☐ FAIL
*PM_{10}-61.9μg/m³	70.3	8.4	13.57	☑ PASS ☐ FAIL				
PM_{10}-108.8μg/m³	124.8	16	14.71	☑ PASS ☐ FAIL				

Note: 1. For PM validation, the reading of transfer standard (TS) will be used as reference. TS Average sourced from MAS-AF300 (N0.9255C240100002). 2. Normally step 2 (*) is not required for QA checking.

1.3. Weather Station Validation Data

The SBS method for weather station validation requires the setup of calibrated TS side by side with MAS-AF300, and operation of the MAS and reference analysers as data source input for validation in this project.

No.9255C240300022 (SAP-G3W5)			
Parameters	Sensor Average	Error	Result
Temperature ± 1℃	TS Average=29.5℃		
	29.6℃	0.1℃	☑ PASS ☐ FAIL
Humidity ± 3% RH	TS Average=76.6% RH		
	75.8% RH	-0.8% RH	☑ PASS ☐ FAIL
Pressure ±1 hPa	TS Average=1009.5 hPa		
	1009.3 hPa	-0.2 hPa	☑ PASS ☐ FAIL

Note: For weather station validation, the reading of transfer standard (TS) will be used as reference. TS Average sourced from MAS-AF300 (N0.9255C240300002).

1.4. Validation Result Summary

No. 9255A240300024 (SAP-G1W0)				
NO	**NO_2**			
☑ PASS	☑ PASS			
PM_1	**$PM_{2.5}$**	**PM_{10}**		
☑ PASS	☑ PASS	☑ PASS		

No. 9255C240300022 (SAP-G3W5)				
NO	**NO_2**	**CO**	**CO_2**	**O_3**
☑ PASS	☑ PASS	☑ PASS	☑ PASS	☑ PASS
PM_1	**$PM_{2.5}$**	**PM_{10}**		
☑ PASS	☑ PASS	☑ PASS		
Temperature	**Humidity**	**Pressure**		
☑ PASS	☑ PASS	☑ PASS		

1.5. Conclusion

The report approves that each calibrated item of the product meets its technical specifications.

Prepared by:		Approved by:		Endorsed by:	

3. AMS after DE-NO2 filter

3.1. Gas validation Data

No.9225A240300010 (SAP-G1W0)								
Validation cycle	QA assessment: NO: 0 ppb, 400 ppb and 800 ppb				QC procedure: NO: 400 ppb			
Passing criteria	± [5] % or ± [5] ppb				± [5] % or ± [5] ppb			
Steps	Reading [ppb]	Error [ppb]	Error [%]	Result	Reading [ppb]	Error [ppb]	Error [%]	Result
NO-0 ppb	1.0	1.0	/	☑ PASS ☐ FAIL	/	/	/	☐ PASS ☐ FAIL
*NO-400 ppb	411.2	11.2	2.80	☑ PASS ☐ FAIL				
NO-800 ppb	786.4	-13.6	-1.70	☑ PASS ☐ FAIL				
Validation cycle	QA assessment: NO_2: 0 ppb, 100 ppb and 200 ppb				QC procedure: NO_2: 100 ppb			
Passing criteria	± [5] % or ± [5] ppb				± [5] % or ± [5] ppb			
Steps	Reading [ppb]	Error [ppb]	Error [%]	Result	Reading [ppb]	Error [ppb]	Error [%]	Result
NO_2-0 ppb	1.0	1.0	/	☑ PASS ☐ FAIL	/	/	/	☐ PASS ☐ FAIL
*NO_2-100 ppb	101.4	1.4	1.40	☑ PASS ☐ FAIL				
NO_2-200 ppb	199.3	-0.7	-0.35	☑ PASS ☐ FAIL				

Note: Normally step 2 (*) is not required for QA checking.

No.9245G240300004 (SAP-G2W3)								
Validation cycle	QA assessment: NO: 0 ppb, 400 ppb and 800 ppb				QC procedure: NO: 400 ppb			
Passing criteria	± [5] % or ± [5] ppb				± [5] % or ± [5] ppb			
Steps	Reading [ppb]	Error [ppb]	Error [%]	Result	Reading [ppb]	Error [ppb]	Error [%]	Result
NO-0 ppb	1.0	1.0	/	☑ PASS ☐ FAIL	/	/	/	☐ PASS ☐ FAIL
*NO-400 ppb	408.2	8.2	2.05	☑ PASS ☐ FAIL				
NO-800 ppb	789.9	-10.1	-1.26	☑ PASS ☐ FAIL				
Validation cycle	QA assessment: NO_2: 0 ppb, 100ppb and 200 ppb				QC procedure: NO_2: 100 ppb			
Passing criteria	± [5] % or ± [5] ppb				± [5] % or ± [5] ppb			
Steps	Reading [ppb]	Error [ppb]	Error [%]	Result	Reading [ppb]	Error [ppb]	Error [%]	Result
NO_2-0 ppb	1.0	1.0	/	☑ PASS ☐ FAIL	/	/	/	☐ PASS ☐ FAIL
*NO_2-100 ppb	99.1	-0.9	-0.90	☑ PASS ☐ FAIL				
NO_2-200 ppb	203.7	3.7	1.85	☑ PASS ☐ FAIL				
Validation cycle	QA assessment: CO: 1 ppm, 2.5 ppm and 5 ppm				QC procedure: CO: 2.5 ppm			
Passing criteria	± [5] %				± [5] %			
Steps	Reading [ppm]	Error [ppm]	Error [%]	Result	Reading [ppm]	Error [ppm]	Error [%]	Result
CO-1 ppm	1.04	0.04	4.00	☑ PASS ☐ FAIL	/	/	/	☐ PASS ☐ FAIL
*CO-2.5 ppm	2.46	-0.04	-1.60	☑ PASS ☐ FAIL				
CO-5 ppm	4.84	-0.16	-3.20	☑ PASS ☐ FAIL				
Validation cycle	QA assessment: CO_2: 1000 ppm, 2500 ppm and 5000 ppm				QC procedure: CO_2: 2500 ppm			
Passing criteria	± [5] %				± [5] %			
Steps	Reading [ppm]	Error [ppm]	Error [%]	Result	Reading [ppm]	Error [ppm]	Error [%]	Result
CO_2-1000 ppm	986.11	-13.89	-1.39	☑ PASS ☐ FAIL	/	/	/	☐ PASS ☐ FAIL
*CO_2-2500 ppm	2519.41	19.41	0.78	☑ PASS ☐ FAIL				
CO_2-5000 ppm	5104.62	104.62	2.09	☑ PASS ☐ FAIL				

Note: Normally step 2 (*) is not required for QA checking.

3.2. PM validation Data

No.9225A240300010 (SAP-G1W0)								
Validation cycle	QA assessment: PM_1				QC procedure: PM_1: /			
Passing criteria	± [15] % or ± [5] μg/m³				± [15] % or ± [5] μg/m³			
TS Average [μg/m³]	Reading [μg/m³]	Error [μg/m³]	Error [%]	Result	Reading [μg/m³]	Error [μg/m³]	Error [%]	Result
PM_1-0 μg/m³	0	0	/	☑ PASS ☐ FAIL	/	/	/	☐ PASS ☐ FAIL
*PM_1-19.6μg/m³	16.7	-2.9	-14.80	☑ PASS ☐ FAIL				
PM_1-37.6μg/m³	32.4	-5.2	-13.83	☑ PASS ☐ FAIL				
Validation cycle	QA assessment: $PM_{2.5}$				QC procedure: $PM_{2.5}$: /			
Passing criteria	± [15] % or ± [5] μg/m³				± [15] % or ± [5] μg/m³			
TS Average [μg/m³]	Reading [μg/m³]	Error [μg/m³]	Error [%]	Result	Reading [μg/m³]	Error [μg/m³]	Error [%]	Result
$PM_{2.5}$-0 μg/m³	0	0	/	☑ PASS ☐ FAIL	/	/	/	☐ PASS ☐ FAIL
*$PM_{2.5}$-30μg/m³	26.2	-3.8	-12.67	☑ PASS ☐ FAIL				
$PM_{2.5}$-58.3μg/m³	50.6	-7.7	-13.21	☑ PASS ☐ FAIL				
Validation cycle	QA assessment: PM_{10}				QC procedure: PM_{10}: /			
Passing criteria	± [15] % or ± [5] μg/m³				± [15] % or ± [5] μg/m³			
TS Average [μg/m³]	Reading [μg/m³]	Error [μg/m³]	Error [%]	Result	Reading [μg/m³]	Error [μg/m³]	Error [%]	Result
PM_{10}-0 μg/m³	0	0	/	☑ PASS ☐ FAIL	/	/	/	☐ PASS ☐ FAIL
*PM_{10}-65μg/m³	56.3	-8.7	-13.38	☑ PASS ☐ FAIL				
PM_{10}-99.9μg/m³	90.8	-9.1	-9.11	☑ PASS ☐ FAIL				

Note: 1. For PM validation, the reading of transfer standard (TS) will be used as reference. TS Average sourced from MAS-AF300 (N0.9255C240300008). 2. Normally step 2 (*) is not required for QA checking.

No.9245G240300004 (SAP-G2W3)								
Validation cycle	QA assessment: PM_1				QC procedure: PM_1: /			
Passing criteria	± [15] % or ± [5] μg/m³				± [15] % or ± [5] μg/m³			
TS Average [μg/m³]	Reading [μg/m³]	Error [μg/m³]	Error [%]	Result	Reading [μg/m³]	Error [μg/m³]	Error [%]	Result
PM_1-0 μg/m³	0	0	/	☑ PASS ☐ FAIL	/	/	/	☐ PASS ☐ FAIL
*PM_1-17.8μg/m³	15.3	-2.5	-14.04	☑ PASS ☐ FAIL				
PM_1-35μg/m³	30.4	-4.6	-13.14	☑ PASS ☐ FAIL				
Validation cycle	QA assessment: $PM_{2.5}$				QC procedure: $PM_{2.5}$: /			
Passing criteria	± [15] % or ± [5] μg/m³				± [15] % or ± [5] μg/m³			
TS Average [μg/m³]	Reading [μg/m³]	Error [μg/m³]	Error [%]	Result	Reading [μg/m³]	Error [μg/m³]	Error [%]	Result
$PM_{2.5}$-0 μg/m³	0	0	/	☑ PASS ☐ FAIL	/	/	/	☐ PASS ☐ FAIL
*$PM_{2.5}$-25.2μg/m³	22.6	-2.6	-10.32	☑ PASS ☐ FAIL				
$PM_{2.5}$-53.4μg/m³	45.6	-7.8	-14.61	☑ PASS ☐ FAIL				
Validation cycle	QA assessment: PM_{10}				QC procedure: PM_{10}: /			
Passing criteria	± [15] % or ± [5] μg/m³				± [15] % or ± [5] μg/m³			
TS Average [μg/m³]	Reading [μg/m³]	Error [μg/m³]	Error [%]	Result	Reading [μg/m³]	Error [μg/m³]	Error [%]	Result
PM_{10}-0 μg/m³	0	0	/	☑ PASS ☐ FAIL	/	/	/	☐ PASS ☐ FAIL
*PM_{10}-46μg/m³	43.9	-2.1	-4.57	☑ PASS ☐ FAIL				

PM_{10}-86.9μg/m³	82.6	-4.3	-4.95	☑ PASS ☐ FAIL				

Note: 1. For PM validation, the reading of transfer standard (TS) will be used as reference. TS Average sourced from MAS-AF300 (N0.9255C240300008). 2. Normally step 2 (*) is not required for QA checking.

3.3. Weather Station Validation Data

No. 9245G240300004 (SAP-G2W3)			
Parameters	Sensor Average	Error	Result
Temperature ± 1℃	TS Average=29.7℃		
	29.2℃	-0.5℃	☑ PASS ☐ FAIL
Humidity ± 3% RH	TS Average=75.1% RH		
	76.2% RH	1.1% RH	☑ PASS ☐ FAIL
Pressure ±1 hPa	TS Average=1010.0hPa		
	1009.2 hPa	-0.8hPa	☑ PASS ☐ FAIL

Note: For weather station validation, the reading of transfer standard (TS) will be used as reference. TS Average sourced from MAS-AF300 (N0.9255C240300008).

3.4. Validation Result Summary

No. 9225A240300010 (SAP-G1W0)				
NO	**NO_2**			
☑ PASS	☑ PASS			
PM_1	**$PM_{2.5}$**	**PM_{10}**		
☑ PASS	☑ PASS	☑ PASS		

No. 9245G240300004 (SAP-G2W3)				
NO	**NO_2**	**CO**	**CO_2**	
☑ PASS	☑ PASS	☑ PASS	☑ PASS	
PM_1	**$PM_{2.5}$**	**PM_{10}**		
☑ PASS	☑ PASS	☑ PASS		
Temperature	**Humidity**	**Pressure**		
☑ PASS	☑ PASS	☑ PASS		

3.5. Conclusion

The report approves that each calibrated item of the product meets its technical specifications.

Prepared by:	王 [illegible]	**Approved by:**	[illegible]	**Endorsed by:**	王志勇

Validation Results Details of Plenum 2

1. AMS before ESP

1.1. Gas validation Data

No.9225A240300032 (SAP-G1W0)								
Validation cycle	QA assessment: NO: 0 ppb, 400 ppb and 800 ppb				QC procedure: NO: 400 ppb			
Passing criteria	± [5] % or ± [5] ppb				± [5] % or ± [5] ppb			
Steps	Reading [ppb]	Error [ppb]	Error [%]	Result	Reading [ppb]	Error [ppb]	Error [%]	Result
NO-0 ppb	1.0	1.0	/	☑ PASS ☐ FAIL	/	/	/	☐ PASS ☐ FAIL
*NO-400 ppb	417.2	17.2	4.30	☑ PASS ☐ FAIL				
NO-800 ppb	795.7	-4.3	-0.54	☑ PASS ☐ FAIL				
Validation cycle	QA assessment: NO_2: 0 ppb, 100 ppb and 200 ppb				QC procedure: NO_2: 100 ppb			
Passing criteria	± [5] % or ± [5] ppb				± [5] % or ± [5] ppb			
Steps	Reading [ppb]	Error [ppb]	Error [%]	Result	Reading [ppb]	Error [ppb]	Error [%]	Result
NO_2-0 ppb	1.0	1.0	/	☑ PASS ☐ FAIL	/	/	/	☐ PASS ☐ FAIL
*NO_2-100 ppb	104.1	4.1	4.10	☑ PASS ☐ FAIL				
NO_2-200 ppb	207.0	7.0	3.50	☑ PASS ☐ FAIL				

Note: Normally step 2 (*) is not required for QA checking.

No.9255C240300021 (SAP-G3W5)								
Validation cycle	QA assessment: NO: 0 ppb, 400 ppb and 800 ppb				QC procedure: NO: 400 ppb			
Passing criteria	± [5] % or ± [5] ppb				± [5] % or ± [5] ppb			
Steps	Reading [ppb]	Error [ppb]	Error [%]	Result	Reading [ppb]	Error [ppb]	Error [%]	Result
NO-0 ppb	1.0	1.0	/	☑ PASS ☐ FAIL	/	/	/	☐ PASS ☐ FAIL
*NO-400 ppb	417.6	17.6	4.40	☑ PASS ☐ FAIL				
NO-800 ppb	792.0	-8.0	-1.00	☑ PASS ☐ FAIL				
Validation cycle	QA assessment: NO_2: 0 ppb, 100 ppb and 200 ppb				QC procedure: NO_2: 100 ppb			
Passing criteria	± [5] % or ± [5] ppb				± [5] % or ± [5] ppb			
Steps	Reading [ppb]	Error [ppb]	Error [%]	Result	Reading [ppb]	Error [ppb]	Error [%]	Result
NO_2-0 ppb	1.0	1.0	/	☑ PASS ☐ FAIL	/	/	/	☐ PASS ☐ FAIL
*NO_2-100 ppb	103.9	3.9	3.90	☑ PASS ☐ FAIL				
NO_2-200 ppb	208.4	8.4	4.20	☑ PASS ☐ FAIL				
Validation cycle	QA assessment: CO: 1 ppm, 2.5 ppm and 5 ppm				QC procedure: CO: 2.5 ppm			
Passing criteria	± [5] %				± [5] %			
Steps	Reading [ppm]	Error [ppm]	Error [%]	Result	Reading [ppm]	Error [ppm]	Error [%]	Result
CO-1 ppm	1.03	0.03	3.00	☑ PASS ☐ FAIL	/	/	/	☐ PASS ☐ FAIL
*CO-2.5 ppm	2.48	-0.02	-0.80	☑ PASS ☐ FAIL				
CO-5 ppm	4.99	-0.01	-0.20	☑ PASS ☐ FAIL				
Validation cycle	QA assessment:CO_2: 1000 ppm, 2500 ppm and 5000 ppm				QC procedure: CO_2: 2500 ppm			
Passing criteria	± [5] %				± [5] %			
Steps	Reading [ppm]	Error [ppm]	Error [%]	Result	Reading [ppm]	Error [ppm]	Error [%]	Result
CO_2-1000 ppm	983.51	-16.49	-1.65	☑ PASS ☐ FAIL	/	/	/	☐ PASS

*CO_2-2500 ppm	2469.97	-30.03	-1.20	☑ PASS ☐ FAIL				☐ FAIL
CO_2-5000 ppm	5102.71	102.71	2.05	☑ PASS ☐ FAIL				
Validation cycle	QA assessment: O_3: 0 ppb, 100 ppb and 200 ppb				QC procedure: O_3: 100 ppb			
Passing criteria	± [5] % or ± [5] ppb				± [5] % or ± [5] ppb			
Steps	Reading [ppb]	Error [ppb]	Error [%]	Result	Reading [ppb]	Error [ppb]	Error [%]	Result
O_3-0 ppb	1	1	/	☑ PASS ☐ FAIL	/	/	/	☐ PASS ☐ FAIL
*O_3-100 ppb	99.5	-0.5	-0.50	☑ PASS ☐ FAIL				
O_3-200 ppb	200.0	0.0	0.00	☑ PASS ☐ FAIL				

Note: Normally step 2 (*) is not required for QA checking.

1.2. PM validation Data

No.9225A240300032 (SAP-G1W0)								
Validation cycle	QA assessment: PM_1				QC procedure: PM_1: /			
Passing criteria	± [15] % or ± [5] μg/m³				± [15] % or ± [5] μg/m³			
TS Average [μg/m³]	Reading [μg/m³]	Error [μg/m³]	Error [%]	Result	Reading [μg/m³]	Error [μg/m³]	Error [%]	Result
PM_1-0 μg/m³	0	0	/	☑ PASS ☐ FAIL	/	/	/	☐ PASS ☐ FAIL
*PM_1-22.8μg/m³	19.6	-3.2	-14.04	☑ PASS ☐ FAIL				
PM_1-46.6μg/m³	39.8	-6.8	-14.59	☑ PASS ☐ FAIL				
Validation cycle	QA assessment: $PM_{2.5}$				QC procedure: $PM_{2.5}$: /			
Passing criteria	± [15] % or ± [5] μg/m³				± [15] % or ± [5] μg/m³			
TS Average [μg/m³]	Reading [μg/m³]	Error [μg/m³]	Error [%]	Result	Reading [μg/m³]	Error [μg/m³]	Error [%]	Result
$PM_{2.5}$-0 μg/m³	0	0	/	☑ PASS ☐ FAIL	/	/	/	☐ PASS ☐ FAIL
*$PM_{2.5}$-35.7μg/m³	31.3	-4.4	-12.32	☑ PASS ☐ FAIL				
$PM_{2.5}$-86.8 μg/m³	75.8	-11	-12.67	☑ PASS ☐ FAIL				
Validation cycle	QA assessment: PM_{10}				QC procedure: PM_{10}: /			
Passing criteria	± [15] % or ± [5] μg/m³				± [15] % or ± [5] μg/m³			
TS Average [μg/m³]	Reading [μg/m³]	Error [μg/m³]	Error [%]	Result	Reading [μg/m³]	Error [μg/m³]	Error [%]	Result
PM_{10}-0 μg/m³	0	0	/	☑ PASS ☐ FAIL	/	/	/	☐ PASS ☐ FAIL
*PM_{10}-80.7μg/m³	69.8	-10.9	-13.51	☑ PASS ☐ FAIL				
PM_{10}-161.0μg/m³	149.5	-11.5	-7.14	☑ PASS ☐ FAIL				

Note: 1. For PM validation, the reading of transfer standard (TS) will be used as reference. TS Average sourced from MAS-AF300 (N0.9255C240300012). 2. Normally step 2 (*) is not required for QA checking.

No.9255C240300021 (SAP-G3W5)								
Validation cycle	QA assessment: PM_1				QC procedure: PM_1: /			
Passing criteria	± [15] % or ± [5] μg/m³				± [15] % or ± [5] μg/m³			
TS Average [μg/m³]	Reading [μg/m³]	Error [μg/m³]	Error [%]	Result	Reading [μg/m³]	Error [μg/m³]	Error [%]	Result
PM_1-0 μg/m³	0	0	/	☑ PASS ☐ FAIL	/	/	/	☐ PASS ☐ FAIL
*PM_1-19.7μg/m³	17.6	-2.1	-10.66	☑ PASS ☐ FAIL				
PM_1-44.5μg/m³	40.7	-3.8	-8.54	☑ PASS ☐ FAIL				
Validation cycle	QA assessment: $PM_{2.5}$				QC procedure: $PM_{2.5}$: /			
Passing criteria	± [15] % or ± [5] μg/m³				± [15] % or ± [5] μg/m³			
TS Average	Reading	Error	Error	Result	Reading	Error	Error	Result

[μg/m³]	[μg/m³]	[μg/m³]	[%]		[μg/m³]	[μg/m³]	[%]	
$PM_{2.5}$-0 μg/m³	0	0	/	☑ PASS ☐ FAIL	/	/	/	☐ PASS ☐ FAIL
*$PM_{2.5}$-30.0μg/m³	25.9	-4.1	-13.67	☑ PASS ☐ FAIL				
$PM_{2.5}$-83.2μg/m³	70.9	-12.3	-14.78	☑ PASS ☐ FAIL				
Validation cycle	QA assessment: PM_{10}				QC procedure: PM_{10}: /			
Passing criteria	± [15] % or ± [5] μg/m³				± [15] % or ± [5] μg/m³			
TS Average [μg/m³]	Reading [μg/m³]	Error [μg/m³]	Error [%]	Result	Reading [μg/m³]	Error [μg/m³]	Error [%]	Result
PM_{10}-0 μg/m³	0	0	/	☑ PASS ☐ FAIL	/	/	/	☐ PASS ☐ FAIL
*PM_{10}-72.7μg/m³	62.3	-10.4	-14.31	☑ PASS ☐ FAIL				
PM_{10}-154.1μg/m³	133.4	-20.7	-13.43	☑ PASS ☐ FAIL				

Note: 1. For PM validation, the reading of transfer standard (TS) will be used as reference. TS Average sourced from MAS-AF300 (N0.9255C240300012). 2. Normally step 2 (*) is not required for QA checking.

1.3. Weather Station Validation Data

The SBS method for weather station validation requires the setup of calibrated TS side by side with MAS-AF300, and operation of the MAS and reference analysers as data source input for validation in this project.

No.9255C240300021 (SAP-G3W5)			
Parameters	Sensor Average	Error	Result
Temperature ± 1℃	TS Average=28.9°C		
	29.1°C	0.2°C	☑ PASS ☐ FAIL
Humidity ± 3% RH	TS Average=81.6% RH		
	80.8% RH	-0.8% RH	☑ PASS ☐ FAIL
Pressure ±1 hPa	TS Average=1007.7hPa		
	1007.6 hPa	-0.1 hPa	☑ PASS ☐ FAIL

Note: For weather station validation, the reading of transfer standard (TS) will be used as reference. TS Average sourced from MAS-AF300 (N0.9255C240300012).

1.4. Validation Result Summary

No. 9225A240300032 (SAP-G1W0)				
NO	**NO_2**			
☑ PASS	☑ PASS			
PM_1	**$PM_{2.5}$**	**PM_{10}**		
☑ PASS	☑ PASS	☑ PASS		

No. 9255C240300021 (SAP-G3W5)				
NO	**NO_2**	**CO**	**CO_2**	**O_3**
☑ PASS	☑ PASS	☑ PASS	☑ PASS	☑ PASS
PM_1	**$PM_{2.5}$**	**PM_{10}**		
☑ PASS	☑ PASS	☑ PASS		
Temperature	**Humidity**	**Pressure**		
☑ PASS	☑ PASS	☑ PASS		

1.5. Conclusion

The report approves that each calibrated item of the product meets its technical specifications.

Prepared by:		Approved by:		Endorsed by:	

3. AMS after DE-NO2 filter

3.1. Gas validation Data

No. 9225A240300030 (SAP-G1W0)								
Validation cycle	QA assessment: NO: 0 ppb, 400 ppb and 800 ppb				QC procedure: NO: 400 ppb			
Passing criteria	± [5] % or ± [5] ppb				± [5] % or ± [5] ppb			
Steps	Reading [ppb]	Error [ppb]	Error [%]	Result	Reading [ppb]	Error [ppb]	Error [%]	Result
NO-0 ppb	1.0	1.0	/	☑ PASS ☐ FAIL	/	/	/	☐ PASS ☐ FAIL
*NO-400 ppb	408.5	8.5	2.13	☑ PASS ☐ FAIL				
NO-800 ppb	767.2	-32.8	-4.10	☑ PASS ☐ FAIL				
Validation cycle	QA assessment: NO_2: 0 ppb, 100 ppb and 200 ppb				QC procedure: NO_2: 100 ppb			
Passing criteria	± [5] % or ± [5] ppb				± [5] % or ± [5] ppb			
Steps	Reading [ppb]	Error [ppb]	Error [%]	Result	Reading [ppb]	Error [ppb]	Error [%]	Result
NO_2-0 ppb	1.0	1.0	/	☑ PASS ☐ FAIL	/	/	/	☐ PASS ☐ FAIL
*NO_2-100 ppb	103.3	3.3	3.30	☑ PASS ☐ FAIL				
NO_2-200 ppb	196.4	-3.6	-1.80	☑ PASS ☐ FAIL				

Note: Normally step 2 (*) is not required for QA checking.

No. 9245G240300012 (SAP-G2W3)								
Validation cycle	QA assessment: NO: 0 ppb, 400 ppb and 800 ppb				QC procedure: NO: 400 ppb			
Passing criteria	± [5] % or ± [5] ppb				± [5] % or ± [5] ppb			
Steps	Reading [ppb]	Error [ppb]	Error [%]	Result	Reading [ppb]	Error [ppb]	Error [%]	Result
NO-0 ppb	1.0	1.0	/	☑ PASS ☐ FAIL	/	/	/	☐ PASS ☐ FAIL
*NO-400 ppb	408.1	8.1	2.03	☑ PASS ☐ FAIL				
NO-800 ppb	766.9	-33.1	-4.14	☑ PASS ☐ FAIL				
Validation cycle	QA assessment: NO_2: 0 ppb, 100 ppb and 200 ppb				QC procedure: NO_2: 100 ppb			
Passing criteria	± [5] % or ± [5] ppb				± [5] % or ± [5] ppb			
Steps	Reading [ppb]	Error [ppb]	Error [%]	Result	Reading [ppb]	Error [ppb]	Error [%]	Result
NO_2-0 ppb	1.0	1.0	/	☑ PASS ☐ FAIL	/	/	/	☐ PASS ☐ FAIL
*NO_2-100 ppb	103.1	3.1	3.10	☑ PASS ☐ FAIL				
NO_2-200 ppb	196.6	-3.4	-1.70	☑ PASS ☐ FAIL				
Validation cycle	QA assessment: CO: 1 ppm, 2.5 ppm and 5 ppm				QC procedure: CO: 2.5 ppm			
Passing criteria	± [5] %				± [5] %			
Steps	Reading [ppm]	Error [ppm]	Error [%]	Result	Reading [ppm]	Error [ppm]	Error [%]	Result
CO-1 ppm	1.02	0.02	2.00	☑ PASS ☐ FAIL	/	/	/	☐ PASS ☐ FAIL
*CO-2.5 ppm	2.45	-0.05	-2.00	☑ PASS ☐ FAIL				
CO-5 ppm	4.94	-0.06	-1.20	☑ PASS ☐ FAIL				
Validation cycle	QA assessment:CO_2: 1000 ppm, 2500 ppm and 5000 ppm				QC procedure: CO_2: 2500 ppm			
Passing criteria	± [5] %				± [5] %			
Steps	Reading [ppm]	Error [ppm]	Error [%]	Result	Reading [ppm]	Error [ppm]	Error [%]	Result
CO_2-1000 ppm	1034.35	34.35	3.43	☑ PASS ☐ FAIL	/	/	/	☐ PASS ☐ FAIL
*CO_2-2500 ppm	2449.27	-50.73	-2.03	☑ PASS ☐ FAIL				

CO_2-5000 ppm	5198.27	198.27	3.97	☑ PASS ☐ FAIL				

Note: Normally step 2 (*) is not required for QA checking.

3.2. PM validation Data

No.9225A240300003 (SAP-G1W0)								
Validation cycle	QA assessment: PM_1				QC procedure: PM_1: /			
Passing criteria	± [15] % or ± [5] μg/m³				± [15] % or ± [5] μg/m³			
TS Average [μg/m³]	Reading [μg/m³]	Error [μg/m³]	Error [%]	Result	Reading [μg/m³]	Error [μg/m³]	Error [%]	Result
PM_1-0 μg/m³	0	0	/	☑ PASS ☐ FAIL	/	/	/	☐ PASS ☐ FAIL
*PM_1-18.5μg/m³	16.3	-2.2	-11.89	☑ PASS ☐ FAIL				
PM_1-41.0μg/m³	35.8	-5.2	-12.68	☑ PASS ☐ FAIL				
Validation cycle	QA assessment: $PM_{2.5}$				QC procedure: $PM_{2.5}$: /			
Passing criteria	± [15] % or ± [5] μg/m³				± [15] % or ± [5] μg/m³			
TS Average [μg/m³]	Reading [μg/m³]	Error [μg/m³]	Error [%]	Result	Reading [μg/m³]	Error [μg/m³]	Error [%]	Result
$PM_{2.5}$-0 μg/m³	0	0	/	☑ PASS ☐ FAIL	/	/	/	☐ PASS ☐ FAIL
*$PM_{2.5}$-24.7μg/m³	23.0	-1.7	-6.88	☑ PASS ☐ FAIL				
$PM_{2.5}$-59.4μg/m³	56.0	-3.4	-5.72	☑ PASS ☐ FAIL				
Validation cycle	QA assessment: PM_{10}				QC procedure: PM_{10}: /			
Passing criteria	± [15] % or ± [5] μg/m³				± [15] % or ± [5] μg/m³			
TS Average [μg/m³]	Reading [μg/m³]	Error [μg/m³]	Error [%]	Result	Reading [μg/m³]	Error [μg/m³]	Error [%]	Result
PM_{10}-0 μg/m³	0	0	/	☑ PASS ☐ FAIL	/	/	/	☐ PASS ☐ FAIL
*PM_{10}-44.7μg/m³	38.5	-6.2	-13.87	☑ PASS ☐ FAIL				
PM_{10}-92.0μg/m³	81.6	-10.4	-11.30	☑ PASS ☐ FAIL				

Note: 1. For PM validation, the reading of transfer standard (TS) will be used as reference. TS Average sourced from MAS-AF300 (N0.9255C240300008). 2. Normally step 2 (*) is not required for QA checking.

No.9245G240300012 (SAP-G2W3)								
Validation cycle	QA assessment: PM_1				QC procedure: PM_1: /			
Passing criteria	± [15] % or ± [5] μg/m³				± [15] % or ± [5] μg/m³			
TS Average [μg/m³]	Reading [μg/m³]	Error [μg/m³]	Error [%]	Result	Reading [μg/m³]	Error [μg/m³]	Error [%]	Result
PM_1-0 μg/m³	0	0	/	☑ PASS ☐ FAIL	/	/	/	☐ PASS ☐ FAIL
*PM_1-21.1μg/m³	18.9	-2.2	-10.43	☑ PASS ☐ FAIL				
PM_1-42.6μg/m³	38.3	-4.3	-10.09	☑ PASS ☐ FAIL				
Validation cycle	QA assessment: $PM_{2.5}$				QC procedure: $PM_{2.5}$: /			
Passing criteria	± [15] % or ± [5] μg/m³				± [15] % or ± [5] μg/m³			
TS Average [μg/m³]	Reading [μg/m³]	Error [μg/m³]	Error [%]	Result	Reading [μg/m³]	Error [μg/m³]	Error [%]	Result
$PM_{2.5}$-0 μg/m³	0	0	/	☑ PASS ☐ FAIL	/	/	/	☐ PASS ☐ FAIL
*$PM_{2.5}$-28.7μg/m³	25.2	-3.5	-12.20	☑ PASS ☐ FAIL				
$PM_{2.5}$-62.4μg/m³	53.3	-9.1	-14.58	☑ PASS ☐ FAIL				
Validation cycle	QA assessment: PM_{10}				QC procedure: PM_{10}: /			
Passing criteria	± [15] % or ± [5] μg/m³				± [15] % or ± [5] μg/m³			
TS Average [μg/m³]	Reading [μg/m³]	Error [μg/m³]	Error [%]	Result	Reading [μg/m³]	Error [μg/m³]	Error [%]	Result

PM_{10}-0 μg/m³	0	0	/	☑ PASS ☐ FAIL	/	/	/	☐ PASS ☐ FAIL
*PM_{10}-51.5μg/m³	44.0	-7.5	-14.56	☑ PASS ☐ FAIL				
PM_{10}-95.0μg/m³	84.1	-10.9	-11.47	☑ PASS ☐ FAIL				

Note: 1. For PM validation, the reading of transfer standard (TS) will be used as reference. TS Average sourced from MAS-AF300 (N0.9255C240300008). 2. Normally step 2 (*) is not required for QA checking.

3.3. Weather Station Validation Data

The SBS method for weather station validation requires the setup of calibrated TS side by side with MAS-AF300, and operation of the MAS and reference analysers as data source input for validation in this project.

No.9245G240300012 (SAP-G2W3)			
Parameters	Sensor Average	Error	Result
Temperature ± 1℃	TS Average=29.6°C		
	29.3°C	-0.3°C	☑ PASS ☐ FAIL
Humidity ± 3% RH	TS Average=78.9% RH		
	79.1% RH	0.2% RH	☑ PASS ☐ FAIL
Pressure ±1 hPa	TS Average=1009.1 hPa		
	1010.0 hPa	0.9 hPa	☑ PASS ☐ FAIL

Note: For weather station validation, the reading of transfer standard (TS) will be used as reference. TS Average sourced from MAS-AF300 (N0.9255C240300008).

3.4. Validation Result Summary

No. 9225A240300030 (SAP-G1W0)				
NO	**NO_2**			
☑ PASS	☑ PASS			
PM_1	**$PM_{2.5}$**	**PM_{10}**		
☑ PASS	☑ PASS	☑ PASS		

No. 9245G240300012 (SAP-G2W3)				
NO	**NO_2**	**CO**	**CO_2**	
☑ PASS	☑ PASS	☑ PASS	☑ PASS	
PM_1	**$PM_{2.5}$**	**PM_{10}**		
☑ PASS	☑ PASS	☑ PASS		
Temperature	**Humidity**	**Pressure**		
☑ PASS	☑ PASS	☑ PASS		

3.5. Conclusion

The report approves that each calibrated item of the product meets its technical specifications.

Prepared by:	王 [illegible]	**Approved by:**	[illegible]	**Endorsed by:**	王志勇

Validation Results Details of Plenum 3

1. AMS before ESP

1.1. Gas validation Data

No.9225A240300002 (SAP-G1W0)								
Validation cycle	QA assessment: NO: 0 ppb, 400 ppb and 800 ppb				QC procedure: NO: 400 ppb			
Passing criteria	± [5] % or ± [5] ppb				± [5] % or ± [5] ppb			
Steps	Reading [ppb]	Error [ppb]	Error [%]	Result	Reading [ppb]	Error [ppb]	Error [%]	Result
NO-0 ppb	1.0	1.0	/	☑ PASS ☐ FAIL				
*NO-400 ppb	401.7	1.7	0.42	☑ PASS ☐ FAIL	/	/	/	☐ PASS ☐ FAIL
NO-800 ppb	787.0	-13.0	-1.63	☑ PASS ☐ FAIL				
Validation cycle	QA assessment: NO_2: 0 ppb, 100ppb and 200 ppb				QC procedure: NO_2: 100 ppb			
Passing criteria	± [5] % or ± [5] ppb				± [5] % or ± [5] ppb			
Steps	Reading [ppb]	Error [ppb]	Error [%]	Result	Reading [ppb]	Error [ppb]	Error [%]	Result
NO_2-0 ppb	1.0	1.0	/	☑ PASS ☐ FAIL				
*NO_2-100 ppb	99.0	-1.0	-1.00	☑ PASS ☐ FAIL	/	/	/	☐ PASS ☐ FAIL
NO_2-200 ppb	194.0	-6.0	-3.00	☑ PASS ☐ FAIL				

Note: Normally step 2 (*) is not required for QA checking.

No.9255C240300014 (SAP-G3W5)								
Validation cycle	QA assessment: NO: 0 ppb, 400 ppb and 800 ppb				QC procedure: NO: 400 ppb			
Passing criteria	± [5] % or ± [5] ppb				± [5] % or ± [5] ppb			
Steps	Reading [ppb]	Error [ppb]	Error [%]	Result	Reading [ppb]	Error [ppb]	Error [%]	Result
NO-0 ppb	1.0	1.0	/	☑ PASS ☐ FAIL				
*NO-400 ppb	403.3	3.3	0.83	☑ PASS ☐ FAIL	/	/	/	☐ PASS ☐ FAIL
NO-800 ppb	786.8	-13.2	-1.65	☑ PASS ☐ FAIL				
Validation cycle	QA assessment: NO_2: 0 ppb, 100 ppb, 100 ppb and 200 ppb				QC procedure: NO_2: 100 ppb			
Passing criteria	± [5] % or ± [5] ppb				± [5] % or ± [5] ppb			
Steps	Reading [ppb]	Error [ppb]	Error [%]	Result	Reading [ppb]	Error [ppb]	Error [%]	Result
NO_2-0 ppb	1.0	1.0	/	☑ PASS ☐ FAIL				
*NO_2-100 ppb	101.3	1.3	1.30	☑ PASS ☐ FAIL	/	/	/	☐ PASS ☐ FAIL
NO_2-200 ppb	196.8	-3.2	-1.60	☑ PASS ☐ FAIL				
Validation cycle	QA assessment: CO: 1 ppm, 2.5 ppm and 5 ppm				QC procedure: CO: 2.5 ppm			
Passing criteria	± [5] %				± [5] %			
Steps	Reading [ppm]	Error [ppm]	Error [%]	Result	Reading [ppm]	Error [ppm]	Error [%]	Result
CO-1 ppm	1.02	0.02	2.00	☑ PASS ☐ FAIL				
*CO-2.5 ppm	2.48	-0.02	-0.80	☑ PASS ☐ FAIL	/	/	/	☐ PASS ☐ FAIL
CO-5 ppm	5.08	0.08	1.60	☑ PASS ☐ FAIL				
Validation cycle	QA assessment: CO_2: 1000 ppm, 2500 ppm and 5000 ppm				QC procedure: CO_2: 2500 ppm			
Passing criteria	± [5] %				± [5] %			
Steps	Reading [ppm]	Error [ppm]	Error [%]	Result	Reading [ppm]	Error [ppm]	Error [%]	Result
CO_2-1000 ppm	957.71	-42.29	-4.23	☑ PASS ☐ FAIL	/	/	/	☐ PASS ☐ FAIL
*CO_2-2500 ppm	2474.91	-25.09	-1.00	☑ PASS ☐ FAIL				

CO_2-5000 ppm	5030.52	30.52	0.61	☑ PASS ☐ FAIL				
Validation cycle	QA assessment: O_3: 0 ppb, 100 ppb, 100 ppb and 200 ppb				QC procedure: O_3: 100 ppb			
Passing criteria	± [5] % or ± [5] ppb				± [5] % or ± [5] ppb			
Steps	Reading [ppb]	Error [ppb]	Error [%]	Result	Reading [ppb]	Error [ppb]	Error [%]	Result
O_3-0 ppb	1	1	/	☑ PASS ☐ FAIL	/	/	/	☐ PASS ☐ FAIL
*O_3-100 ppb	103.1	3.1	3.10	☑ PASS ☐ FAIL				
O_3-200 ppb	208.1	8.1	4.05	☑ PASS ☐ FAIL				

Note: Normally step 2 (*) is not required for QA checking.

1.2. PM validation Data

No.9225A240300002 (SAP-G1W0)								
Validation cycle	QA assessment: PM_1				QC procedure: PM_1: /			
Passing criteria	± [15] % or ± [5] μg/m³				± [15] % or ± [5] μg/m³			
TS Average [μg/m³]	Reading [μg/m³]	Error [μg/m³]	Error [%]	Result	Reading [μg/m³]	Error [μg/m³]	Error [%]	Result
PM_1-0 μg/m³	0	0	/	☑ PASS ☐ FAIL	/	/	/	☐ PASS ☐ FAIL
*PM_1-21.5μg/m³	18.6	-2.9	-13.49	☑ PASS ☐ FAIL				
PM_1-60.6μg/m³	51.6	-9	-14.85	☑ PASS ☐ FAIL				
Validation cycle	QA assessment: $PM_{2.5}$				QC procedure: $PM_{2.5}$: /			
Passing criteria	± [15] % or ± [5] μg/m³				± [15] % or ± [5] μg/m³			
TS Average [μg/m³]	Reading [μg/m³]	Error [μg/m³]	Error [%]	Result	Reading [μg/m³]	Error [μg/m³]	Error [%]	Result
$PM_{2.5}$-0 μg/m³	0	0	/	☑ PASS ☐ FAIL	/	/	/	☐ PASS ☐ FAIL
*$PM_{2.5}$-33.7μg/m³	31.7	-2	-5.93	☑ PASS ☐ FAIL				
$PM_{2.5}$- 111.8μg/m³	99.9	-11.9	-10.64	☑ PASS ☐ FAIL				
Validation cycle	QA assessment: PM_{10}				QC procedure: PM_{10}: /			
Passing criteria	± [15] % or ± [5] μg/m³				± [15] % or ± [5] μg/m³			
TS Average [μg/m³]	Reading [μg/m³]	Error [μg/m³]	Error [%]	Result	Reading [μg/m³]	Error [μg/m³]	Error [%]	Result
PM_{10}-0 μg/m³	0	0	/	☑ PASS ☐ FAIL	/	/	/	☐ PASS ☐ FAIL
*PM_{10}-55.3μg/m³	59.6	4.3	7.78	☑ PASS ☐ FAIL				
PM_{10}-163.6μg/m³	162	-1.6	-0.98	☑ PASS ☐ FAIL				

Note: 1. For PM validation, the reading of transfer standard (TS) will be used as reference. TS Average sourced from MAS-AF300 (N0.9255C240100002). 2. Normally step 2 (*) is not required for QA checking.

No.9255C240300014 (SAP-G3W5)								
Validation cycle	QA assessment: PM_1				QC procedure: PM_1: /			
Passing criteria	± [15] % or ± [5] μg/m³				± [15] % or ± [5] μg/m³			
TS Average [μg/m³]	Reading [μg/m³]	Error [μg/m³]	Error [%]	Result	Reading [μg/m³]	Error [μg/m³]	Error [%]	Result
PM_1-0 μg/m³	0	0	/	☑ PASS ☐ FAIL	/	/	/	☐ PASS ☐ FAIL
*PM_1-25.0μg/m³	28.5	3.5	14.00	☑ PASS ☐ FAIL				
PM_1-67.2μg/m³	71.2	4	5.95	☑ PASS ☐ FAIL				
Validation cycle	QA assessment: $PM_{2.5}$				QC procedure: $PM_{2.5}$: /			
Passing criteria	± [15] % or ± [5] μg/m³				± [15] % or ± [5] μg/m³			
TS Average [μg/m³]	Reading [μg/m³]	Error [μg/m³]	Error [%]	Result	Reading [μg/m³]	Error [μg/m³]	Error [%]	Result
$PM_{2.5}$-0 μg/m³	0	0	/	☑ PASS ☐ FAIL	/	/	/	☐ PASS

*$PM_{2.5}$-55.1μg/m³	47.2	-7.9	-14.34	☑ PASS ☐ FAIL				☐ FAIL
$PM_{2.5}$-132.0μg/m³	150.8	18.8	14.24	☑ PASS ☐ FAIL				
Validation cycle	QA assessment: PM_{10}				QC procedure: PM_{10}: /			
Passing criteria	± [15] % or ± [5] μg/m³				± [15] % or ± [5] μg/m³			
TS Average [μg/m³]	Reading [μg/m³]	Error [μg/m³]	Error [%]	Result	Reading [μg/m³]	Error [μg/m³]	Error [%]	Result
PM_{10}-0 μg/m³	0	0	/	☑ PASS ☐ FAIL	/	/	/	☐ PASS ☐ FAIL
*PM_{10}-93.0μg/m³	87.5	-5.5	-5.91	☑ PASS ☐ FAIL				
PM_{10}-193.2μg/m³	221.1	27.9	14.44	☑ PASS ☐ FAIL				

Note: 1. For PM validation, the reading of transfer standard (TS) will be used as reference. TS Average sourced from MAS-AF300 (N0.9255C240100002). 2. Normally step 2 (*) is not required for QA checking.

1.3. Weather Station Validation Data

The SBS method for weather station validation requires the setup of calibrated TS side by side with MAS-AF300, and operation of the MAS and reference analysers as data source input for validation in this project.

No.9255C240300014 (SAP-G3W5)			
Parameters	Sensor Average	Error	Result
Temperature ± 1℃	TS Average=30.1°C		
	29.8°C	-0.3°C	☑ PASS ☐ FAIL
Humidity ± 3% RH	TS Average=77.7% RH		
	80.3% RH	2.6% RH	☑ PASS ☐ FAIL
Pressure ±1 hPa	TS Average=1010.3 hPa		
	1010.5 hPa	0.2 hPa	☑ PASS ☐ FAIL

Note: For weather station validation, the reading of transfer standard (TS) will be used as reference. TS Average sourced from MAS-AF300 (N0.9255C240100002).

1.4. Validation Result Summary

No. 9225A240300002 (SAP-G1W0)				
NO	**NO_2**			
☑ PASS	☑ PASS			
PM_1	**$PM_{2.5}$**	**PM_{10}**		
☑ PASS	☑ PASS	☑ PASS		

No. 9255C240300014 (SAP-G3W5)				
NO	**NO_2**	**CO**	**CO_2**	**O_3**
☑ PASS	☑ PASS	☑ PASS	☑ PASS	☑ PASS
PM_1	**$PM_{2.5}$**	**PM_{10}**		
☑ PASS	☑ PASS	☑ PASS		
Temperature	**Humidity**	**Pressure**		
☑ PASS	☑ PASS	☑ PASS		

1.5. Conclusion

The report approves that each calibrated item of the product meets its technical specifications.

Prepared by:	王家	**Approved by:**	[illegible]	**Endorsed by:**	王志勇

3. AMS after DE-NO2 filter

3.1. Gas validation Data

No.9225A240300031 (SAP-G1W0)								
Validation cycle	QA assessment: NO: 0 ppb, 400 ppb and 800 ppb				QC procedure: NO: 400 ppb			
Passing criteria	± [5] % or ± [5] ppb				± [5] % or ± [5] ppb			
Steps	Reading [ppb]	Error [ppb]	Error [%]	Result	Reading [ppb]	Error [ppb]	Error [%]	Result
NO-0 ppb	1.0	1.0	/	☑ PASS ☐ FAIL	/	/	/	☐ PASS ☐ FAIL
*NO-400 ppb	410.6	10.6	2.65	☑ PASS ☐ FAIL				
NO-800 ppb	784.1	-15.9	-1.99	☑ PASS ☐ FAIL				
Validation cycle	QA assessment: NO_2: 0 ppb, 100 ppb and 200 ppb				QC procedure: NO_2: 100 ppb			
Passing criteria	± [5] % or ± [5] ppb				± [5] % or ± [5] ppb			
Steps	Reading [ppb]	Error [ppb]	Error [%]	Result	Reading [ppb]	Error [ppb]	Error [%]	Result
NO_2-0 ppb	1.0	1.0	/	☑ PASS ☐ FAIL	/	/	/	☐ PASS ☐ FAIL
*NO_2-100 ppb	103.7	3.7	3.70	☑ PASS ☐ FAIL				
NO_2-200 ppb	208.4	8.4	4.20	☑ PASS ☐ FAIL				

Note: Normally step 2 (*) is not required for QA checking.

No.9245G240300017 (SAP-G2W3)								
Validation cycle	QA assessment: NO: 0 ppb, 400 ppb and 800 ppb				QC procedure: NO: 400 ppb			
Passing criteria	± [5] % or ± [5] ppb				± [5] % or ± [5] ppb			
Steps	Reading [ppb]	Error [ppb]	Error [%]	Result	Reading [ppb]	Error [ppb]	Error [%]	Result
NO-0 ppb	1.0	1.0	/	☑ PASS ☐ FAIL	/	/	/	☐ PASS ☐ FAIL
*NO-400 ppb	412.3	12.3	3.08	☑ PASS ☐ FAIL				
NO-800 ppb	800.4	0.4	0.05	☑ PASS ☐ FAIL				
Validation cycle	QA assessment: NO_2: 0 ppb, 100 ppb and 200 ppb				QC procedure: NO_2: 100 ppb			
Passing criteria	± [5] % or ± [5] ppb				± [5] % or ± [5] ppb			
Steps	Reading [ppb]	Error [ppb]	Error [%]	Result	Reading [ppb]	Error [ppb]	Error [%]	Result
NO_2-0 ppb	1.0	1.0	/	☑ PASS ☐ FAIL	/	/	/	☐ PASS ☐ FAIL
*NO_2-100 ppb	99	-1	-1.00	☑ PASS ☐ FAIL				
NO_2-200 ppb	199.8	-0.2	-0.10	☑ PASS ☐ FAIL				
Validation cycle	QA assessment: CO: 1 ppm, 2.5 ppm and 5 ppm				QC procedure: CO: 2.5 ppm			
Passing criteria	± [5] %				± [5] %			
Steps	Reading [ppm]	Error [ppm]	Error [%]	Result	Reading [ppm]	Error [ppm]	Error [%]	Result
CO-1 ppm	0.98	-0.02	-2.00	☑ PASS ☐ FAIL	/	/	/	☐ PASS ☐ FAIL
*CO-2.5 ppm	2.56	0.06	2.40	☑ PASS ☐ FAIL				
CO-5 ppm	4.98	-0.02	-0.40	☑ PASS ☐ FAIL				
Validation cycle	QA assessment:CO_2: 1000 ppm, 2500 ppm and 5000 ppm				QC procedure: CO_2: 2500 ppm			
Passing criteria	± [5] %				± [5] %			
Steps	Reading [ppm]	Error [ppm]	Error [%]	Result	Reading [ppm]	Error [ppm]	Error [%]	Result
CO_2-1000 ppm	989.34	-10.66	-1.07	☑ PASS ☐ FAIL	/	/	/	☐ PASS ☐ FAIL
*CO_2-2500 ppm	2546.82	46.82	1.87	☑ PASS ☐ FAIL				
CO_2-5000 ppm	4875.39	-124.61	-2.49	☑ PASS ☐ FAIL				

Note: Normally step 2 (*) is not required for QA checking.

3.2. PM validation Data

No.9225A240300031 (SAP-G1W0)								
Validation cycle	QA assessment: PM_1				QC procedure: PM_1: /			
Passing criteria	± [15] % or ± [5] μg/m³				± [15] % or ± [5] μg/m³			
TS Average [μg/m³]	Reading [μg/m³]	Error [μg/m³]	Error [%]	Result	Reading [μg/m³]	Error [μg/m³]	Error [%]	Result
PM_1-0 μg/m³	0	0	/	☑ PASS ☐ FAIL	/	/	/	☐ PASS ☐ FAIL
*PM_1-14.2μg/m³	15.4	1.2	8.45	☑ PASS ☐ FAIL				
PM_1-36.0μg/m³	40.8	4.8	13.33	☑ PASS ☐ FAIL				
Validation cycle	QA assessment: $PM_{2.5}$				QC procedure: $PM_{2.5}$: /			
Passing criteria	± [15] % or ± [5] μg/m³				± [15] % or ± [5] μg/m³			
TS Average [μg/m³]	Reading [μg/m³]	Error [μg/m³]	Error [%]	Result	Reading [μg/m³]	Error [μg/m³]	Error [%]	Result
$PM_{2.5}$-0 μg/m³	0	0	/	☑ PASS ☐ FAIL	/	/	/	☐ PASS ☐ FAIL
*$PM_{2.5}$-21.1μg/m³	19.5	-1.6	-7.58	☑ PASS ☐ FAIL				
$PM_{2.5}$-59.5μg/m³	50.7	-8.8	-14.79	☑ PASS ☐ FAIL				
Validation cycle	QA assessment: PM_{10}				QC procedure: PM_{10}: /			
Passing criteria	± [15] % or ± [5] μg/m³				± [15] % or ± [5] μg/m³			
TS Average [μg/m³]	Reading [μg/m³]	Error [μg/m³]	Error [%]	Result	Reading [μg/m³]	Error [μg/m³]	Error [%]	Result
PM_{10}-0 μg/m³	0	0	/	☑ PASS ☐ FAIL	/	/	/	☐ PASS ☐ FAIL
*PM_{10}-49.1μg/m³	53.4	4.3	8.76	☑ PASS ☐ FAIL				
PM_{10}-110.0μg/m³	120.6	10.6	9.64	☑ PASS ☐ FAIL				

Note: 1. For PM validation, the reading of transfer standard (TS) will be used as reference. TS Average sourced from MAS-AF300 (N0.9255C240300008). 2. Normally step 2 (*) is not required for QA checking.

No.9245G240300017 (SAP-G2W3)								
Validation cycle	QA assessment: PM_1				QC procedure: PM_1: /			
Passing criteria	± [15] % or ± [5] μg/m³				± [15] % or ± [5] μg/m³			
TS Average [μg/m³]	Reading [μg/m³]	Error [μg/m³]	Error [%]	Result	Reading [μg/m³]	Error [μg/m³]	Error [%]	Result
PM_1-0 μg/m³	0	0	/	☑ PASS ☐ FAIL	/	/	/	☐ PASS ☐ FAIL
*PM_1-17.8μg/m³	15.7	-2.1	-11.80	☑ PASS ☐ FAIL				
PM_1-36.6μg/m³	31.3	-5.3	-14.48	☑ PASS ☐ FAIL				
Validation cycle	QA assessment: $PM_{2.5}$				QC procedure: $PM_{2.5}$: /			
Passing criteria	± [15] % or ± [5] μg/m³				± [15] % or ± [5] μg/m³			
TS Average [μg/m³]	Reading [μg/m³]	Error [μg/m³]	Error [%]	Result	Reading [μg/m³]	Error [μg/m³]	Error [%]	Result
$PM_{2.5}$-0 μg/m³	0	0	/	☑ PASS ☐ FAIL	/	/	/	☐ PASS ☐ FAIL
*$PM_{2.5}$-29.3μg/m³	28.3	-1	-3.41	☑ PASS ☐ FAIL				
$PM_{2.5}$-60.2μg/m³	51.5	-8.7	-14.45	☑ PASS ☐ FAIL				
Validation cycle	QA assessment: PM_{10}				QC procedure: PM_{10}: /			
Passing criteria	± [15] % or ± [5] μg/m³				± [15] % or ± [5] μg/m³			
TS Average [μg/m³]	Reading [μg/m³]	Error [μg/m³]	Error [%]	Result	Reading [μg/m³]	Error [μg/m³]	Error [%]	Result
PM_{10}-0 μg/m³	0	0	/	☑ PASS ☐ FAIL	/	/	/	☐ PASS

*PM_{10}-66.0μg/m³	61.7	-4.3	-6.52	☑ PASS ☐ FAIL				☐ FAIL
PM_{10}-105.5μg/m³	91.2	-14.3	-13.55	☑ PASS ☐ FAIL				

Note: 1. For PM validation, the reading of transfer standard (TS) will be used as reference. TS Average sourced from MAS-AF300 (N0.9255C240300008). 2. Normally step 2 (*) is not required for QA checking.

3.3. Weather Station Validation Data

The SBS method for weather station validation requires the setup of calibrated TS side by side with MAS-AF300, and operation of the MAS and reference analysers as data source input for validation in this project.

No.9245G240300017 (SAP-G2W3)			
Parameters	Sensor Average	Error	Result
Temperature ± 1℃	TS Average=29.9℃		
	29.9℃	0℃	☑ PASS ☐ FAIL
Humidity ± 3% RH	TS Average=77.2% RH		
	77.6% RH	0.4% RH	☑ PASS ☐ FAIL
Pressure ±1 hPa	TS Average=1010.8 hPa		
	1010.4 hPa	-0.4 hPa	☑ PASS ☐ FAIL

Note: For weather station validation, the reading of transfer standard (TS) will be used as reference. TS Average sourced from MAS-AF300 (N0.9255C240300008).

3.4. Validation Result Summary

No. 9225A240300031 (SAP-G1W0)				
NO	**NO_2**			
☑ PASS	☑ PASS			
PM_1	**$PM_{2.5}$**	**PM_{10}**		
☑ PASS	☑ PASS	☑ PASS		

No. 9245G240300017 (SAP-G2W3)				
NO	**NO_2**	**CO**	**CO_2**	
☑ PASS	☑ PASS	☑ PASS	☑ PASS	
PM_1	**$PM_{2.5}$**	**PM_{10}**		
☑ PASS	☑ PASS	☑ PASS		
Temperature	**Humidity**	**Pressure**		
☑ PASS	☑ PASS	☑ PASS		

3.5. Conclusion

The report approves that each calibrated item of the product meets its technical specifications.

Prepared by:	王子龙	**Approved by:**	[illegible]	**Endorsed by:**	王志勇

AMS Testing and Commissioning Record

SAPIENS

MAS Model	MAS-AF300
Report ID	Onsite Validation Record_HVB_Plenum
Test date	2025-07-24 to 2025-08-06
Report Date	2025-08-12
Version	1.1

Description

Sapiens Sensor AMS has implemented the state-of-the-art air sensing technology to provide its users reliable and near-reference air quality data. It is designed with strict Quality Assurance and Quality Control (QA/QC) schemes to achieve the fit-for-purpose and accurate measurement results to attain different data quality objectives fit for professional applications.
All units have already been calibrated at the factory, however, considering of the transportation from factory to site, all the devices shall be further verified on- site prior to tunnel commissioning.

Traceability of Reference Instrument:

As a key QAQC tool, Sapiens Sensor Calibration Kit is designed to provide traceable gas of known concentration at ambient humidity and PM standards to calibrate Sapiens sensor products during the field operation. The model for the instruments is listed below.
1) Portable Sensor Calibrator (PSC) for targeting standard gas during onsite validation work;
2) Portable Aerosol Generator (PAG) generate stable flow and concentration of particulate matters with range of sizes simultaneously.

Pollutant	Calibration Instruments	Model	Serial No.
NO	Portable Sensor Calibrator	PSC-100	9913Z230700001
NO_2	Portable Sensor Calibrator		
O_3	Portable Sensor Calibrator		
CO	Portable Sensor Calibrator	PSC-200	9913Z250400001
CO_2	Portable Sensor Calibrator		
PM	Portable Aerosol Generator	PAG-100	9916Z240100001

Installation location and device ID information section

Air Purification System	Location	Serial No. of MAS
HVB_Plenum 1	Before ESP	~~9225A240300022 (SAP-G1W0)~~ 9255C240300017 (SAP-G3W5)
	Between ESP & DE-NO_2 filter	~~9225A240300019 (SAP-G1W0)~~ 9255C240300019 (SAP-G3W5)
	After DE-NO_2 filter	~~9225A240300004 (SAP-G1W0)~~ 9245G240300010 (SAP-G2W3)
HVB_Plenum 2	Before ESP	~~9225A240300023 (SAP-G1W0)~~ 9255C240300009 (SAP-G3W5)
	Between ESP & DE-NO_2 filter	~~9225A240300021 (SAP-G1W0)~~ 9255C240300024 (SAP-G3W5)
	After DE-NO_2 filter	~~9225A240300003 (SAP-G1W0)~~ 9245G240300016 (SAP-G2W3)
HVB_Plenum 3	Before ESP	~~9225A240300020 (SAP-G1W0)~~ 9255C240300020 (SAP-G3W5)
	Between ESP & DE-NO_2 filter	~~9225A240300016 (SAP-G1W0)~~ 9255C240300018 (SAP-G3W5)
	After DE-NO_2 filter	~~9225A240300027 (SAP-G1W0)~~ 9245G240300011 (SAP-G2W3)

Data quality passing criteria of AMS

Parameters	Passing criteria
NO	± [5] % or ± [5] ppb, whichever greater
NO_2	± [5] % or ± [5] ppb, whichever greater

Parameters	Passing criteria
CO	± [5] %
CO_2	± [5] %
O_3	± [5] % or ± [5] ppb, whichever greater
PM_1	± [15] % or ± [5] $\mu g/m^3$, whichever greater
$PM_{2.5}$	± [15] % or ± [5] $\mu g/m^3$, whichever greater
PM_{10}	± [15] % or ± [5] $\mu g/m^3$, whichever greater
Temperature	± 1℃
Humidity	± 3% RH
Pressure	± 1 hPa

Validation Results Details of Plenum 1

1. AMS before ESP

1.1. Gas validation Data

No.9225A240300022 (SAP-G1W0)								
Validation cycle	QA assessment: NO: 0 ppb, 400 ppb and 800 ppb				QC procedure: NO: 400 ppb			
Passing criteria	± [5] % or ± [5] ppb				± [5] % or ± [5] ppb			
Steps	Reading [ppb]	Error [ppb]	Error [%]	Result	Reading [ppb]	Error [ppb]	Error [%]	Result
NO-0 ppb	1.0	1.0	/	☑ PASS ☐ FAIL	/	/	/	☐ PASS ☐ FAIL
*NO-400 ppb	394.1	-5.9	-1.47	☑ PASS ☐ FAIL				
NO-800 ppb	795.5	-4.5	-0.56	☑ PASS ☐ FAIL				
Validation cycle	QA assessment: NO_2: 0 ppb, 100ppb and 200 ppb				QC procedure: NO_2: 100 ppb			
Passing criteria	± [5] % or ± [5] ppb				± [5] % or ± [5] ppb			
Steps	Reading [ppb]	Error [ppb]	Error [%]	Result	Reading [ppb]	Error [ppb]	Error [%]	Result
NO_2-0 ppb	1.0	1.0	/	☑ PASS ☐ FAIL	/	/	/	☐ PASS ☐ FAIL
*NO_2-100 ppb	99.4	-0.6	-0.60	☑ PASS ☐ FAIL				
NO_2-200 ppb	208.4	8.4	4.20	☑ PASS ☐ FAIL				

Note: Normally step 2 (*) is not required for QA checking.

No.9255C240300017 (SAP-G3W5)								
Validation cycle	QA assessment: NO: 0 ppb, 400 ppb and 800 ppb				QC procedure: NO: 400 ppb			
Passing criteria	± [5] % or ± [5] ppb				± [5] % or ± [5] ppb			
Steps	Reading [ppb]	Error [ppb]	Error [%]	Result	Reading [ppb]	Error [ppb]	Error [%]	Result
NO-0 ppb	1.0	1.0	/	☑ PASS ☐ FAIL	/	/	/	☐ PASS ☐ FAIL
*NO-400 ppb	391.2	-8.8	-2.20	☑ PASS ☐ FAIL				
NO-800 ppb	794.2	-5.8	-0.72	☑ PASS ☐ FAIL				
Validation cycle	QA assessment: NO_2: 0 ppb, 100ppb and 200 ppb				QC procedure: NO_2: 100 ppb			
Passing criteria	± [5] % or ± [5] ppb				± [5] % or ± [5] ppb			
Steps	Reading [ppb]	Error [ppb]	Error [%]	Result	Reading [ppb]	Error [ppb]	Error [%]	Result
NO_2-0 ppb	1.0	1.0	/	☑ PASS ☐ FAIL	/	/	/	☐ PASS ☐ FAIL
*NO_2-100 ppb	101.9	1.9	1.90	☑ PASS ☐ FAIL				
NO_2-200 ppb	208.1	8.1	4.05	☑ PASS ☐ FAIL				
Validation cycle	QA assessment: CO: 1 ppm, 2.5 ppm and 5 ppm				QC procedure: CO: 2.5 ppm			
Passing criteria	± [5] %				± [5] %			
Steps	Reading [ppm]	Error [ppm]	Error [%]	Result	Reading [ppm]	Error [ppm]	Error [%]	Result
CO-1 ppm	0.98	-0.02	-2.00	☑ PASS ☐ FAIL	/	/	/	☐ PASS ☐ FAIL
*CO-2.5 ppm	2.42	-0.08	-3.20	☑ PASS ☐ FAIL				
CO-5 ppm	5.03	0.03	0.60	☑ PASS ☐ FAIL				
Validation cycle	QA assessment: CO_2: 1000 ppm, 2500 ppm and 5000 ppm				QC procedure: CO_2: 2500 ppm			
Passing criteria	± [5] %				± [5] %			
Steps	Reading [ppm]	Error [ppm]	Error [%]	Result	Reading [ppm]	Error [ppm]	Error [%]	Result
CO_2-1000 ppm	992.45	-7.55	-0.75	☑ PASS ☐ FAIL	/	/	/	☐ PASS ☐ FAIL
*CO_2-2500 ppm	2514.30	14.30	0.57	☑ PASS ☐ FAIL				

CO_2-5000 ppm	4908.70	-91.30	-1.83	☑ PASS ☐ FAIL				
Validation cycle	QA assessment: O_3: 0 ppb, 100 ppb, 100 ppb and 200 ppb				QC procedure: O_3: 100 ppb			
Passing criteria	± [5] % or ± [5] ppb				± [5] % or ± [5] ppb			
Steps	Reading [ppb]	Error [ppb]	Error [%]	Result	Reading [ppb]	Error [ppb]	Error [%]	Result
O_3-0 ppb	1.0	1.0	/	☑ PASS ☐ FAIL	/	/	/	☐ PASS ☐ FAIL
*O_3-100 ppb	95.4	-4.6	-4.60	☑ PASS ☐ FAIL				
O_3-200 ppb	201.4	1.4	0.70	☑ PASS ☐ FAIL				

Note: Normally step 2 (*) is not required for QA checking.

1.2. PM validation Data

No.9225A240300022 (SAP-G1W0)								
Validation cycle	QA assessment: PM_1				QC procedure: PM_1: /			
Passing criteria	± [15] % or ± [5] μg/m³				± [15] % or ± [5] μg/m³			
TS Average [μg/m³]	Reading [μg/m³]	Error [μg/m³]	Error [%]	Result	Reading [μg/m³]	Error [μg/m³]	Error [%]	Result
PM_1-0 μg/m³	0	0	/	☑ PASS ☐ FAIL	/	/	/	☐ PASS ☐ FAIL
*PM_1-63.3μg/m³	59.7	-3.8	-5.98	☑ PASS ☐ FAIL				
PM_1-83.9μg/m³	73.4	-10.5	-12.51	☑ PASS ☐ FAIL				
Validation cycle	QA assessment: $PM_{2.5}$				QC procedure: $PM_{2.5}$: /			
Passing criteria	± [15] % or ± [5] μg/m³				± [15] % or ± [5] μg/m³			
TS Average [μg/m³]	Reading [μg/m³]	Error [μg/m³]	Error [%]	Result	Reading [μg/m³]	Error [μg/m³]	Error [%]	Result
$PM_{2.5}$-0 μg/m³	0	0	/	☑ PASS ☐ FAIL	/	/	/	☐ PASS ☐ FAIL
*$PM_{2.5}$-96.5μg/m³	92.0	-4.5	-4.66	☑ PASS ☐ FAIL				
$PM_{2.5}$-132.3μg/m³	131.7	-0.6	-0.45	☑ PASS ☐ FAIL				
Validation cycle	QA assessment: PM_{10}				QC procedure: PM_{10}: /			
Passing criteria	± [15] % or ± [5] μg/m³				± [15] % or ± [5] μg/m³			
TS Average [μg/m³]	Reading [μg/m³]	Error [μg/m³]	Error [%]	Result	Reading [μg/m³]	Error [μg/m³]	Error [%]	Result
PM_{10}-0 μg/m³	0	0	/	☑ PASS ☐ FAIL	/	/	/	☐ PASS ☐ FAIL
*PM_{10}-130.4μg/m³	141.7	11.3	8.67	☑ PASS ☐ FAIL				
PM_{10}- 173.0μg/m³	192.5	19.5	11.27	☑ PASS ☐ FAIL				

Note: 1. For PM validation, the reading of transfer standard (TS) will be used as reference. TS Average sourced from MAS-AF300 (N0.9255C240300008). 2. Normally step 2 (*) is not required for QA checking.

No.9255C240300017 (SAP-G3W5)								
Validation cycle	QA assessment: PM_1				QC procedure: PM_1: /			
Passing criteria	± [15] % or ± [5] μg/m³				± [15] % or ± [5] μg/m³			
TS Average [μg/m³]	Reading [μg/m³]	Error [μg/m³]	Error [%]	Result	Reading [μg/m³]	Error [μg/m³]	Error [%]	Result
PM_1-0 μg/m³	0	0	/	☑ PASS ☐ FAIL	/	/	/	☐ PASS ☐ FAIL
*PM_1-61.0μg/m³	52.6	-8.4	-13.77	☑ PASS ☐ FAIL				
PM_1-85.4μg/m³	73.6	-11.8	-13.82	☑ PASS ☐ FAIL				
Validation cycle	QA assessment: $PM_{2.5}$				QC procedure: $PM_{2.5}$: /			
Passing criteria	± [15] % or ± [5] μg/m³				± [15] % or ± [5] μg/m³			
TS Average [μg/m³]	Reading [μg/m³]	Error [μg/m³]	Error [%]	Result	Reading [μg/m³]	Error [μg/m³]	Error [%]	Result

$PM_{2.5}$-0 μg/m³	0	0	/	☑ PASS ☐ FAIL	/	/	/	☐ PASS ☐ FAIL
*$PM_{2.5}$-91.6μg/m³	96.3	4.7	5.13	☑ PASS ☐ FAIL				
$PM_{2.5}$-137.9μg/m³	137.9	0.0	0.00	☑ PASS ☐ FAIL				
Validation cycle	QA assessment: PM_{10}				QC procedure: PM_{10}: /			
Passing criteria	± [15] % or ± [5] μg/m³				± [15] % or ± [5] μg/m³			
TS Average [μg/m³]	Reading [μg/m³]	Error [μg/m³]	Error [%]	Result	Reading [μg/m³]	Error [μg/m³]	Error [%]	Result
PM_{10}-0 μg/m³	0	0	/	☑ PASS ☐ FAIL	/	/	/	☐ PASS ☐ FAIL
*PM_{10}-121.9μg/m³	132.7	10.8	8.86	☑ PASS ☐ FAIL				
PM_{10}-184.3μg/m³	206.9	22.6	12.26	☑ PASS ☐ FAIL				

Note: 1. For PM validation, the reading of transfer standard (TS) will be used as reference. TS Average sourced from MAS-AF300 (N0.9255C240300008). 2. Normally step 2 (*) is not required for QA checking.

1.3. Weather Station Validation Data

The SBS method for weather station validation requires the setup of calibrated TS side by side with MAS-AF300, and operation of the MAS and reference analysers as data source input for validation in this project.

No.9255C240300017 (SAP-G3W5)			
Parameters	**Sensor Average**	**Error**	**Result**
Temperature ± 1℃	TS Average=29.6℃		
	30.0℃	0.4℃	☑ PASS ☐ FAIL
Humidity ± 3% RH	TS Average=74.3% RH		
	74.9% RH	0.6% RH	☑ PASS ☐ FAIL
Pressure ±1 hPa	TS Average=998.6 hPa		
	998.8 hPa	0.2 hPa	☑ PASS ☐ FAIL

Note: For weather station validation, the reading of transfer standard (TS) will be used as reference. TS Average sourced from MAS-AF300 (N0.9255C240300008).

1.4. Validation Result Summary

No. 9225A240300022 (SAP-G1W0)				
NO	**NO_2**			
☑ PASS	☑ PASS			
PM_1	**$PM_{2.5}$**	**PM_{10}**		
☑ PASS	☑ PASS	☑ PASS		

No. 9255C240300017 (SAP-G3W5)				
NO	**NO_2**	**CO**	**CO_2**	**O_3**
☑ PASS	☑ PASS	☑ PASS	☑ PASS	☑ PASS
PM_1	**$PM_{2.5}$**	**PM_{10}**		
☑ PASS	☑ PASS	☑ PASS		
Temperature	**Humidity**	**Pressure**		
☑ PASS	☑ PASS	☑ PASS		

1.5. Conclusion

The report approves that each calibrated item of the product meets its technical specifications.

Prepared by:	王[illegible]	Approved by:	[illegible]	Endorsed by:	王志勇

3. AMS after DE-NO2 filter

3.1. Gas validation Data

No.9225A240300004 (SAP-G1W0)								
Validation cycle	QA assessment: NO: 0 ppb, 400 ppb and 800 ppb				QC procedure: NO: 400 ppb			
Passing criteria	± [5] % or ± [5] ppb				± [5] % or ± [5] ppb			
Steps	Reading [ppb]	Error [ppb]	Error [%]	Result	Reading [ppb]	Error [ppb]	Error [%]	Result
NO-0 ppb	1.0	1.0	/	☑ PASS ☐ FAIL	/	/	/	☐ PASS ☐ FAIL
*NO-400 ppb	402.5	2.5	0.63	☑ PASS ☐ FAIL				
NO-800 ppb	827.9	27.9	3.49	☑ PASS ☐ FAIL				
Validation cycle	QA assessment: NO_2: 0 ppb, 100 ppb and 200 ppb				QC procedure: NO_2: 100 ppb			
Passing criteria	± [5] % or ± [5] ppb				± [5] % or ± [5] ppb			
Steps	Reading [ppb]	Error [ppb]	Error [%]	Result	Reading [ppb]	Error [ppb]	Error [%]	Result
NO_2-0 ppb	1.0	1.0	/	☑ PASS ☐ FAIL	/	/	/	☐ PASS ☐ FAIL
*NO_2-100 ppb	98.6	-1.4	-1.40	☑ PASS ☐ FAIL				
NO_2-200 ppb	197.7	-2.3	-1.15	☑ PASS ☐ FAIL				

Note: Normally step 2 (*) is not required for QA checking.

No.9245G240300010 (SAP-G2W3)								
Validation cycle	QA assessment: NO: 0 ppb, 400 ppb and 800 ppb				QC procedure: NO: 400 ppb			
Passing criteria	± [5] % or ± [5] ppb				± [5] % or ± [5] ppb			
Steps	Reading [ppb]	Error [ppb]	Error [%]	Result	Reading [ppb]	Error [ppb]	Error [%]	Result
NO-0 ppb	1.0	1.0	/	☑ PASS ☐ FAIL	/	/	/	☐ PASS ☐ FAIL
*NO-400 ppb	403.1	3.1	0.78	☑ PASS ☐ FAIL				
NO-800 ppb	824.3	24.3	3.04	☑ PASS ☐ FAIL				
Validation cycle	QA assessment: NO_2: 0 ppb, 100ppb and 200 ppb				QC procedure: NO_2: 100 ppb			
Passing criteria	± [5] % or ± [5] ppb				± [5] % or ± [5] ppb			
Steps	Reading [ppb]	Error [ppb]	Error [%]	Result	Reading [ppb]	Error [ppb]	Error [%]	Result
NO_2-0 ppb	1.0	1.0	/	☑ PASS ☐ FAIL	/	/	/	☐ PASS ☐ FAIL
*NO_2-100 ppb	100.8	0.8	0.80	☑ PASS ☐ FAIL				
NO_2-200 ppb	199.5	-0.5	-0.25	☑ PASS ☐ FAIL				
Validation cycle	QA assessment: CO: 1 ppm, 2.5 ppm and 5 ppm				QC procedure: CO: 2.5 ppm			
Passing criteria	± [5] %				± [5] %			
Steps	Reading [ppm]	Error [ppm]	Error [%]	Result	Reading [ppm]	Error [ppm]	Error [%]	Result
CO-1 ppm	1.01	0.01	1.00	☑ PASS ☐ FAIL	/	/	/	☐ PASS ☐ FAIL
*CO-2.5 ppm	2.44	-0.06	-2.40	☑ PASS ☐ FAIL				
CO-5 ppm	5.01	0.01	0.20	☑ PASS ☐ FAIL				
Validation cycle	QA assessment: CO_2: 1000 ppm, 2500 ppm and 5000 ppm				QC procedure: CO_2: 2500 ppm			
Passing criteria	± [5] %				± [5] %			
Steps	Reading [ppm]	Error [ppm]	Error [%]	Result	Reading [ppm]	Error [ppm]	Error [%]	Result
CO_2-1000 ppm	1021.43	21.43	2.14	☑ PASS ☐ FAIL	/	/	/	☐ PASS ☐ FAIL
*CO_2-2500 ppm	2406.35	-93.65	-3.75	☑ PASS ☐ FAIL				
CO_2-5000 ppm	4965.97	-34.03	-0.68	☑ PASS ☐ FAIL				

Note: Normally step 2 (*) is not required for QA checking.

3.2. PM validation Data

No.9225A240300004 (SAP-G1W0)								
Validation cycle	QA assessment: PM_1				QC procedure: PM_1: /			
Passing criteria	± [15] % or ± [5] μg/m³				± [15] % or ± [5] μg/m³			
TS Average [μg/m³]	Reading [μg/m³]	Error [μg/m³]	Error [%]	Result	Reading [μg/m³]	Error [μg/m³]	Error [%]	Result
PM_1-0 μg/m³	0	0	/	☑ PASS ☐ FAIL	/	/	/	☐ PASS ☐ FAIL
*PM_1-59.4μg/m³	52.4	-7.0	-11.78	☑ PASS ☐ FAIL				
PM_1-86.9μg/m³	75.1	-11.8	-13.58	☑ PASS ☐ FAIL				
Validation cycle	QA assessment: $PM_{2.5}$				QC procedure: $PM_{2.5}$: /			
Passing criteria	± [15] % or ± [5] μg/m³				± [15] % or ± [5] μg/m³			
TS Average [μg/m³]	Reading [μg/m³]	Error [μg/m³]	Error [%]	Result	Reading [μg/m³]	Error [μg/m³]	Error [%]	Result
$PM_{2.5}$-0 μg/m³	0	0	/	☑ PASS ☐ FAIL	/	/	/	☐ PASS ☐ FAIL
*$PM_{2.5}$-116.5μg/m³	120.4	3.9	3.35	☑ PASS ☐ FAIL				
$PM_{2.5}$- 176.9μg/m³	176.9	0.0	0.00	☑ PASS ☐ FAIL				
Validation cycle	QA assessment: PM_{10}				QC procedure: PM_{10}: /			
Passing criteria	± [15] % or ± [5] μg/m³				± [15] % or ± [5] μg/m³			
TS Average [μg/m³]	Reading [μg/m³]	Error [μg/m³]	Error [%]	Result	Reading [μg/m³]	Error [μg/m³]	Error [%]	Result
PM_{10}-0 μg/m³	0	0	/	☑ PASS ☐ FAIL	/	/	/	☐ PASS ☐ FAIL
*PM_{10}- 169.4μg/m³	190.0	20.6	12.16	☑ PASS ☐ FAIL				
PM_{10}- 261.0μg/m³	298.9	37.9	14.52	☑ PASS ☐ FAIL				

Note: 1. For PM validation, the reading of transfer standard (TS) will be used as reference. TS Average sourced from MAS-AF300 (N0.9255C240100002). 2. Normally step 2 (*) is not required for QA checking.

No.9245G240300010 (SAP-G2W3)								
Validation cycle	QA assessment: PM_1				QC procedure: PM_1: /			
Passing criteria	± [15] % or ± [5] μg/m³				± [15] % or ± [5] μg/m³			
TS Average [μg/m³]	Reading [μg/m³]	Error [μg/m³]	Error [%]	Result	Reading [μg/m³]	Error [μg/m³]	Error [%]	Result
PM_1-0 μg/m³	0	0	/	☑ PASS ☐ FAIL	/	/	/	☐ PASS ☐ FAIL
*PM_1-55.7μg/m³	54.3	-1.4	-2.51	☑ PASS ☐ FAIL				
PM_1-88.3μg/m³	86.1	-2.2	-2.49	☑ PASS ☐ FAIL				
Validation cycle	QA assessment: $PM_{2.5}$				QC procedure: $PM_{2.5}$: /			
Passing criteria	± [15] % or ± [5] μg/m³				± [15] % or ± [5] μg/m³			
TS Average [μg/m³]	Reading [μg/m³]	Error [μg/m³]	Error [%]	Result	Reading [μg/m³]	Error [μg/m³]	Error [%]	Result
$PM_{2.5}$-0 μg/m³	0	0	/	☑ PASS ☐ FAIL	/	/	/	☐ PASS ☐ FAIL
*$PM_{2.5}$- 106.4μg/m³	118.2	11.8	11.09	☑ PASS ☐ FAIL				
$PM_{2.5}$-179.5μg/m³	198.4	18.9	10.53	☑ PASS ☐ FAIL				
Validation cycle	QA assessment: PM_{10}				QC procedure: PM_{10}: /			
Passing criteria	± [15] % or ± [5] μg/m³				± [15] % or ± [5] μg/m³			
TS Average [μg/m³]	Reading [μg/m³]	Error [μg/m³]	Error [%]	Result	Reading [μg/m³]	Error [μg/m³]	Error [%]	Result
PM_{10}-0 μg/m³	0	0	/	☑ PASS ☐ FAIL	/	/	/	☐ PASS ☐ FAIL
*PM_{10}- 164.8μg/m³	185.6	20.8	12.62	☑ PASS ☐ FAIL				

PM_{10}-291.5μg/m³	330.1	38.6	13.24	☑ PASS ☐ FAIL					

Note: 1. For PM validation, the reading of transfer standard (TS) will be used as reference. TS Average sourced from MAS-AF300 (N0.9255C240100002). 2. Normally step 2 (*) is not required for QA checking.

3.3. Weather Station Validation Data

No.9245G240300010 (SAP-G2W3)			
Parameters	Sensor Average	Error	Result
Temperature ± 1℃	TS Average=31.2°C		
	31.5°C	0.3°C	☑ PASS ☐ FAIL
Humidity ± 3% RH	TS Average=62.1% RH		
	60.4% RH	-1.7% RH	☑ PASS ☐ FAIL
Pressure ±1 hPa	TS Average=999.7 hPa		
	999.0 hPa	-0.7 hPa	☑ PASS ☐ FAIL

Note: For weather station validation, the reading of transfer standard (TS) will be used as reference. TS Average sourced from MAS-AF300 (N0.9255C240100002).

3.4. Validation Result Summary

No. 9225A240300004 (SAP-G1W0)				
NO	**NO_2**			
☑ PASS	☑ PASS			
PM_1	**$PM_{2.5}$**	**PM_{10}**		
☑ PASS	☑ PASS	☑ PASS		

No. 9245G240300010 (SAP-G2W3)				
NO	**NO_2**	**CO**	**CO_2**	
☑ PASS	☑ PASS	☑ PASS	☑ PASS	
PM_1	**$PM_{2.5}$**	**PM_{10}**		
☑ PASS	☑ PASS	☑ PASS		
Temperature	**Humidity**	**Pressure**		
☑ PASS	☑ PASS	☑ PASS		

3.5. Conclusion

The report approves that each calibrated item of the product meets its technical specifications.

Prepared by:		Approved by:		Endorsed by:	

Validation Results Details of Plenum 2

1. AMS before ESP

1.1. Gas validation Data

No.9225A240300023 (SAP-G1W0)								
Validation cycle	QA assessment: NO: 0 ppb, 400 ppb and 800 ppb				QC procedure: NO: 400 ppb			
Passing criteria	± [5] % or ± [5] ppb				± [5] % or ± [5] ppb			
Steps	Reading [ppb]	Error [ppb]	Error [%]	Result	Reading [ppb]	Error [ppb]	Error [%]	Result
NO-0 ppb	1.0	1.0	/	☑ PASS ☐ FAIL	/	/	/	☐ PASS ☐ FAIL
*NO-400 ppb	414.8	14.8	3.70	☑ PASS ☐ FAIL				
NO-800 ppb	793.8	-6.2	-0.78	☑ PASS ☐ FAIL				
Validation cycle	QA assessment: NO_2: 0 ppb, 100 ppb and 200 ppb				QC procedure: NO_2: 100 ppb			
Passing criteria	± [5] % or ± [5] ppb				± [5] % or ± [5] ppb			
Steps	Reading [ppb]	Error [ppb]	Error [%]	Result	Reading [ppb]	Error [ppb]	Error [%]	Result
NO_2-0 ppb	1.0	1.0	/	☑ PASS ☐ FAIL	/	/	/	☐ PASS ☐ FAIL
*NO_2-100 ppb	104.1	4.1	4.10	☑ PASS ☐ FAIL				
NO_2-200 ppb	195.5	-4.5	-2.25	☑ PASS ☐ FAIL				

Note: Normally step 2 (*) is not required for QA checking.

No.9255C240300009 (SAP-G3W5)								
Validation cycle	QA assessment: NO: 0 ppb, 400 ppb and 800 ppb				QC procedure: NO: 400 ppb			
Passing criteria	± [5] % or ± [5] ppb				± [5] % or ± [5] ppb			
Steps	Reading [ppb]	Error [ppb]	Error [%]	Result	Reading [ppb]	Error [ppb]	Error [%]	Result
NO-0 ppb	1.0	1.0	/	☑ PASS ☐ FAIL	/	/	/	☐ PASS ☐ FAIL
*NO-400 ppb	417.5	17.5	4.38	☑ PASS ☐ FAIL				
NO-800 ppb	805.4	5.4	0.67	☑ PASS ☐ FAIL				
Validation cycle	QA assessment: NO_2: 0 ppb, 100 ppb and 200 ppb				QC procedure: NO_2: 100 ppb			
Passing criteria	± [5] % or ± [5] ppb				± [5] % or ± [5] ppb			
Steps	Reading [ppb]	Error [ppb]	Error [%]	Result	Reading [ppb]	Error [ppb]	Error [%]	Result
NO_2-0 ppb	1.0	1.0	/	☑ PASS ☐ FAIL	/	/	/	☐ PASS ☐ FAIL
*NO_2-100 ppb	103.9	3.9	3.90	☑ PASS ☐ FAIL				
NO_2-200 ppb	198.0	-2.0	-1.00	☑ PASS ☐ FAIL				
Validation cycle	QA assessment: CO: 1 ppm, 2.5 ppm and 5 ppm				QC procedure: CO: 2.5 ppm			
Passing criteria	± [5] %				± [5] %			
Steps	Reading [ppm]	Error [ppm]	Error [%]	Result	Reading [ppm]	Error [ppm]	Error [%]	Result
CO-1 ppm	0.98	-0.02	-2.00	☑ PASS ☐ FAIL	/	/	/	☐ PASS ☐ FAIL
*CO-2.5 ppm	2.46	-0.04	-1.60	☑ PASS ☐ FAIL				
CO-5 ppm	4.95	-0.05	-1.00	☑ PASS ☐ FAIL				
Validation cycle	QA assessment:CO_2: 1000 ppm, 2500 ppm and 5000 ppm				QC procedure: CO_2: 2500 ppm			
Passing criteria	± [5] %				± [5] %			
Steps	Reading [ppm]	Error [ppm]	Error [%]	Result	Reading [ppm]	Error [ppm]	Error [%]	Result
CO_2-1000 ppm	1003.83	3.83	0.38	☑ PASS ☐ FAIL	/	/	/	☐ PASS

*CO_2-2500 ppm	2468.92	-31.08	-1.24	☑ PASS ☐ FAIL				☐ FAIL
CO_2-5000 ppm	4822.69	-177.31	-3.55	☑ PASS ☐ FAIL				
Validation cycle	QA assessment: O_3: 0 ppb, 100 ppb and 200 ppb				QC procedure: O_3: 100 ppb			
Passing criteria	± [5] % or ± [5] ppb				± [5] % or ± [5] ppb			
Steps	Reading [ppb]	Error [ppb]	Error [%]	Result	Reading [ppb]	Error [ppb]	Error [%]	Result
O_3-0 ppb	1.0	1.0	/	☑ PASS ☐ FAIL	/	/	/	☐ PASS ☐ FAIL
*O_3-100 ppb	102.8	2.8	2.80	☑ PASS ☐ FAIL				
O_3-200 ppb	205.2	5.2	2.60	☑ PASS ☐ FAIL				

Note: Normally step 2 (*) is not required for QA checking.

1.2. PM validation Data

No.9225A240300023 (SAP-G1W0)								
Validation cycle	QA assessment: PM_1				QC procedure: PM_1: /			
Passing criteria	± [15] % or ± [5] μg/m³				± [15] % or ± [5] μg/m³			
TS Average [μg/m³]	Reading [μg/m³]	Error [μg/m³]	Error [%]	Result	Reading [μg/m³]	Error [μg/m³]	Error [%]	Result
PM_1-0 μg/m³	0	0	/	☑ PASS ☐ FAIL	/	/	/	☐ PASS ☐ FAIL
*PM_1-13.1 μg/m³	14.2	1.1	8.40	☑ PASS ☐ FAIL				
PM_1-23.6 μg/m³	20.5	-3.1	-13.14	☑ PASS ☐ FAIL				
Validation cycle	QA assessment: $PM_{2.5}$				QC procedure: $PM_{2.5}$: /			
Passing criteria	± [15] % or ± [5] μg/m³				± [15] % or ± [5] μg/m³			
TS Average [μg/m³]	Reading [μg/m³]	Error [μg/m³]	Error [%]	Result	Reading [μg/m³]	Error [μg/m³]	Error [%]	Result
$PM_{2.5}$-0 μg/m³	0	0	/	☑ PASS ☐ FAIL	/	/	/	☐ PASS ☐ FAIL
*$PM_{2.5}$-17.0μg/m³	18.6	1.6	9.41	☑ PASS ☐ FAIL				
$PM_{2.5}$- 37.1 μg/m³	33.9	-3.2	-8.63	☑ PASS ☐ FAIL				
Validation cycle	QA assessment: PM_{10}				QC procedure: PM_{10}: /			
Passing criteria	± [15] % or ± [5] μg/m³				± [15] % or ± [5] μg/m³			
TS Average [μg/m³]	Reading [μg/m³]	Error [μg/m³]	Error [%]	Result	Reading [μg/m³]	Error [μg/m³]	Error [%]	Result
PM_{10}-0 μg/m³	0	0	/	☑ PASS ☐ FAIL	/	/	/	☐ PASS ☐ FAIL
*PM_{10}-45.2μg/m³	50.8	5.6	12.39	☑ PASS ☐ FAIL				
PM_{10}- 77.8μg/m³	70.4	-7.4	-9.51	☑ PASS ☐ FAIL				

Note: 1. For PM validation, the reading of transfer standard (TS) will be used as reference. TS Average sourced from MAS-AF300 (N0.9255C240300012). 2. Normally step 2 (*) is not required for QA checking.

No.9255C240300009 (SAP-G3W5)								
Validation cycle	QA assessment: PM_1				QC procedure: PM_1: /			
Passing criteria	± [15] % or ± [5] μg/m³				± [15] % or ± [5] μg/m³			
TS Average [μg/m³]	Reading [μg/m³]	Error [μg/m³]	Error [%]	Result	Reading [μg/m³]	Error [μg/m³]	Error [%]	Result
PM_1-0 μg/m³	0	0	/	☑ PASS ☐ FAIL	/	/	/	☐ PASS ☐ FAIL
*PM_1-16.2μg/m³	18.3	2.1	12.96	☑ PASS ☐ FAIL				
PM_1-24.2 μg/m³	23.7	-0.5	-2.07	☑ PASS ☐ FAIL				
Validation cycle	QA assessment: $PM_{2.5}$				QC procedure: $PM_{2.5}$: /			
Passing criteria	± [15] % or ± [5] μg/m³				± [15] % or ± [5] μg/m³			
TS Average	Reading	Error	Error	Result	Reading	Error	Error	Result

[μg/m³]	[μg/m³]	[μg/m³]	[%]		[μg/m³]	[μg/m³]	[%]	
$PM_{2.5}$-0 μg/m³	0	0	/	☑ PASS ☐ FAIL	/	/	/	☐ PASS ☐ FAIL
*$PM_{2.5}$-29.9μg/m³	32.1	2.2	7.36	☑ PASS ☐ FAIL				
$PM_{2.5}$- 37.8 μg/m³	37.1	-0.7	-1.85	☑ PASS ☐ FAIL				
Validation cycle	QA assessment: PM_{10}				QC procedure: PM_{10}: /			
Passing criteria	± [15] % or ± [5] μg/m³				± [15] % or ± [5] μg/m³			
TS Average [μg/m³]	Reading [μg/m³]	Error [μg/m³]	Error [%]	Result	Reading [μg/m³]	Error [μg/m³]	Error [%]	Result
PM_{10}-0 μg/m³	0	0	/	☑ PASS ☐ FAIL	/	/	/	☐ PASS ☐ FAIL
*PM_{10}-70.6μg/m³	78.7	8.1	11.47	☑ PASS ☐ FAIL				
PM_{10}- 83.9μg/m³	79.2	-4.7	-5.60	☑ PASS ☐ FAIL				

Note: 1. For PM validation, the reading of transfer standard (TS) will be used as reference. TS Average sourced from MAS-AF300 (N0.9255C240300012). 2. Normally step 2 (*) is not required for QA checking.

1.3. Weather Station Validation Data

The SBS method for weather station validation requires the setup of calibrated TS side by side with MAS-AF300, and operation of the MAS and reference analysers as data source input for validation in this project.

No.9255C240300009 (SAP-G3W5)			
Parameters	Sensor Average	Error	Result
Temperature ± 1 ℃	TS Average=28.9℃		
	28.4℃	-0.5℃	☑ PASS ☐ FAIL
Humidity ± 3% RH	TS Average=74.4% RH		
	76.1% RH	1.7% RH	☑ PASS ☐ FAIL
Pressure ±1 hPa	TS Average=1000.5 hPa		
	1000.8 hPa	0.3 hPa	☑ PASS ☐ FAIL

Note: For weather station validation, the reading of transfer standard (TS) will be used as reference. TS Average sourced from MAS-AF300 (N0.9255C240300012).

1.4. Validation Result Summary

No. 9225A240300023 (SAP-G1W0)				
NO	**NO_2**			
☑ PASS	☑ PASS			
PM_1	**$PM_{2.5}$**	**PM_{10}**		
☑ PASS	☑ PASS	☑ PASS		

No. 9255C240300009 (SAP-G3W5)				
NO	**NO_2**	**CO**	**CO_2**	**O_3**
☑ PASS	☑ PASS	☑ PASS	☑ PASS	☑ PASS
PM_1	**$PM_{2.5}$**	**PM_{10}**		
☑ PASS	☑ PASS	☑ PASS		
Temperature	**Humidity**	**Pressure**		
☑ PASS	☑ PASS	☑ PASS		

1.5. Conclusion

The report approves that each calibrated item of the product meets its technical specifications.

Prepared by:		Approved by:		Endorsed by:	

3. AMS after DE-NO2 filter

3.1. Gas validation Data

No.9225A240300003 (SAP-G1W0)								
Validation cycle	QA assessment: NO: 0 ppb, 400 ppb and 800 ppb				QC procedure: NO: 400 ppb			
Passing criteria	± [5] % or ± [5] ppb				± [5] % or ± [5] ppb			
Steps	Reading [ppb]	Error [ppb]	Error [%]	Result	Reading [ppb]	Error [ppb]	Error [%]	Result
NO-0 ppb	1.0	1.0	/	☑ PASS ☐ FAIL	/	/	/	☐ PASS ☐ FAIL
*NO-400 ppb	418.5	18.5	4.63	☑ PASS ☐ FAIL				
NO-800 ppb	793.1	-6.9	-0.86	☑ PASS ☐ FAIL				
Validation cycle	QA assessment: NO_2: 0 ppb, 100 ppb and 200 ppb				QC procedure: NO_2: 100 ppb			
Passing criteria	± [5] % or ± [5] ppb				± [5] % or ± [5] ppb			
Steps	Reading [ppb]	Error [ppb]	Error [%]	Result	Reading [ppb]	Error [ppb]	Error [%]	Result
NO_2-0 ppb	1.0	1.0	/	☑ PASS ☐ FAIL	/	/	/	☐ PASS ☐ FAIL
*NO_2-100 ppb	103.3	3.3	3.30	☑ PASS ☐ FAIL				
NO_2-200 ppb	206.0	6.0	3.00	☑ PASS ☐ FAIL				

Note: Normally step 2 (*) is not required for QA checking.

No.9245G240300016 (SAP-G2W3)								
Validation cycle	QA assessment: NO: 0 ppb, 400 ppb and 800 ppb				QC procedure: NO: 400 ppb			
Passing criteria	± [5] % or ± [5] ppb				± [5] % or ± [5] ppb			
Steps	Reading [ppb]	Error [ppb]	Error [%]	Result	Reading [ppb]	Error [ppb]	Error [%]	Result
NO-0 ppb	1.0	1.0	/	☑ PASS ☐ FAIL	/	/	/	☐ PASS ☐ FAIL
*NO-400 ppb	416.8	16.8	4.20	☑ PASS ☐ FAIL				
NO-800 ppb	806.6	6.6	0.83	☑ PASS ☐ FAIL				
Validation cycle	QA assessment: NO_2: 0 ppb, 100 ppb and 200 ppb				QC procedure: NO_2: 100 ppb			
Passing criteria	± [5] % or ± [5] ppb				± [5] % or ± [5] ppb			
Steps	Reading [ppb]	Error [ppb]	Error [%]	Result	Reading [ppb]	Error [ppb]	Error [%]	Result
NO_2-0 ppb	1.0	1.0	/	☑ PASS ☐ FAIL	/	/	/	☐ PASS ☐ FAIL
*NO_2-100 ppb	104.0	4.0	4.00	☑ PASS ☐ FAIL				
NO_2-200 ppb	204.7	4.7	2.35	☑ PASS ☐ FAIL				
Validation cycle	QA assessment: CO: 1 ppm, 2.5 ppm and 5 ppm				QC procedure: CO: 2.5 ppm			
Passing criteria	± [5] %				± [5] %			
Steps	Reading [ppm]	Error [ppm]	Error [%]	Result	Reading [ppm]	Error [ppm]	Error [%]	Result
CO-1 ppm	1.00	0.00	0.00	☑ PASS ☐ FAIL	/	/	/	☐ PASS ☐ FAIL
*CO-2.5 ppm	2.43	-0.07	-2.80	☑ PASS ☐ FAIL				
CO-5 ppm	5.01	0.01	0.20	☑ PASS ☐ FAIL				
Validation cycle	QA assessment:CO_2: 1000 ppm, 2500 ppm and 5000 ppm				QC procedure: CO_2: 2500 ppm			
Passing criteria	± [5] %				± [5] %			
Steps	Reading [ppm]	Error [ppm]	Error [%]	Result	Reading [ppm]	Error [ppm]	Error [%]	Result
CO_2-1000 ppm	994.53	-5.47	-0.55	☑ PASS ☐ FAIL	/	/	/	☐ PASS ☐ FAIL
*CO_2-2500 ppm	2479.30	-20.70	-0.83	☑ PASS ☐ FAIL				

CO_2-5000 ppm	4934.46	-65.54	-1.31	☑ PASS ☐ FAIL				

Note: Normally step 2 (*) is not required for QA checking.

3.2. PM validation Data

No.9225A240300003 (SAP-G1W0)								
Validation cycle	QA assessment: PM_1				QC procedure: PM_1: /			
Passing criteria	± [15] % or ± [5] μg/m³				± [15] % or ± [5] μg/m³			
TS Average [μg/m³]	Reading [μg/m³]	Error [μg/m³]	Error [%]	Result	Reading [μg/m³]	Error [μg/m³]	Error [%]	Result
PM_1-0 μg/m³	0	0	/	☑ PASS ☐ FAIL	/	/	/	☐ PASS ☐ FAIL
*PM_1-27.0 μg/m³	31.0	4.0	14.81	☑ PASS ☐ FAIL				
PM_1-22.2 μg/m³	21.7	-0.5	-2.25	☑ PASS ☐ FAIL				
Validation cycle	QA assessment: $PM_{2.5}$				QC procedure: $PM_{2.5}$: /			
Passing criteria	± [15] % or ± [5] μg/m³				± [15] % or ± [5] μg/m³			
TS Average [μg/m³]	Reading [μg/m³]	Error [μg/m³]	Error [%]	Result	Reading [μg/m³]	Error [μg/m³]	Error [%]	Result
$PM_{2.5}$-0 μg/m³	0	0	/	☑ PASS ☐ FAIL	/	/	/	☐ PASS ☐ FAIL
*$PM_{2.5}$-46.4 μg/m³	44.2	-2.2	-4.74	☑ PASS ☐ FAIL				
$PM_{2.5}$- 83.4 μg/m³	76.8	-6.6	-7.91	☑ PASS ☐ FAIL				
Validation cycle	QA assessment: PM_{10}				QC procedure: PM_{10}: /			
Passing criteria	± [15] % or ± [5] μg/m³				± [15] % or ± [5] μg/m³			
TS Average [μg/m³]	Reading [μg/m³]	Error [μg/m³]	Error [%]	Result	Reading [μg/m³]	Error [μg/m³]	Error [%]	Result
PM_{10}-0 μg/m³	0	0	/	☑ PASS ☐ FAIL	/	/	/	☐ PASS ☐ FAIL
*PM_{10}-90.0 μg/m³	102.2	12.2	13.56	☑ PASS ☐ FAIL				
PM_{10}- 405.9μg/m³	418.4	12.5	3.08	☑ PASS ☐ FAIL				

Note: 1. For PM validation, the reading of transfer standard (TS) will be used as reference. TS Average sourced from MAS-AF300 (N0.9255C240100002). 2. Normally step 2 (*) is not required for QA checking.

No.9245G240300016 (SAP-G2W3)								
Validation cycle	QA assessment: PM_1				QC procedure: PM_1: /			
Passing criteria	± [15] % or ± [5] μg/m³				± [15] % or ± [5] μg/m³			
TS Average [μg/m³]	Reading [μg/m³]	Error [μg/m³]	Error [%]	Result	Reading [μg/m³]	Error [μg/m³]	Error [%]	Result
PM_1-0 μg/m³	0	0	/	☑ PASS ☐ FAIL	/	/	/	☐ PASS ☐ FAIL
*PM_1-28.2μg/m³	26.8	-1.4	-4.96	☑ PASS ☐ FAIL				
PM_1-27.4μg/m³	24.5	-2.9	-10.58	☑ PASS ☐ FAIL				
Validation cycle	QA assessment: $PM_{2.5}$				QC procedure: $PM_{2.5}$: /			
Passing criteria	± [15] % or ± [5] μg/m³				± [15] % or ± [5] μg/m³			
TS Average [μg/m³]	Reading [μg/m³]	Error [μg/m³]	Error [%]	Result	Reading [μg/m³]	Error [μg/m³]	Error [%]	Result
$PM_{2.5}$-0 μg/m³	0	0	/	☑ PASS ☐ FAIL	/	/	/	☐ PASS ☐ FAIL
*$PM_{2.5}$-43.7μg/m³	49.0	5.3	12.13	☑ PASS ☐ FAIL				
$PM_{2.5}$-62.7μg/m³	57.6	-5.1	-8.13	☑ PASS ☐ FAIL				
Validation cycle	QA assessment: PM_{10}				QC procedure: PM_{10}: /			
Passing criteria	± [15] % or ± [5] μg/m³				± [15] % or ± [5] μg/m³			
TS Average [μg/m³]	Reading [μg/m³]	Error [μg/m³]	Error [%]	Result	Reading [μg/m³]	Error [μg/m³]	Error [%]	Result

PM_{10}-0 μg/m³	0	0	/	☑ PASS ☐ FAIL	/	/	/	☐ PASS ☐ FAIL
*PM_{10}-74.9μg/m³	85.5	10.6	14.15	☑ PASS ☐ FAIL				
PM_{10}-149.6μg/m³	135.0	-14.6	-9.76	☑ PASS ☐ FAIL				

Note: 1. For PM validation, the reading of transfer standard (TS) will be used as reference. TS Average sourced from MAS-AF300 (N0.9255C240100002). 2. Normally step 2 (*) is not required for QA checking.

3.3. Weather Station Validation Data

The SBS method for weather station validation requires the setup of calibrated TS side by side with MAS-AF300, and operation of the MAS and reference analysers as data source input for validation in this project.

No.9245G240300016 (SAP-G2W3)			
Parameters	Sensor Average	Error	Result
Temperature ± 1℃	TS Average=31.3℃		
	31.9℃	0.6℃	☑ PASS ☐ FAIL
Humidity ± 3% RH	TS Average=56.9% RH		
	57.7% RH	0.8% RH	☑ PASS ☐ FAIL
Pressure ±1 hPa	TS Average=1001.6 hPa		
	1001.3 hPa	-0.3 hPa	☑ PASS ☐ FAIL

Note: For weather station validation, the reading of transfer standard (TS) will be used as reference. TS Average sourced from MAS-AF300 (N0.9255C240100002).

3.4. Validation Result Summary

No. 9225A240300003 (SAP-G1W0)				
NO	**NO_2**			
☑ PASS	☑ PASS			
PM_1	**$PM_{2.5}$**	**PM_{10}**		
☑ PASS	☑ PASS	☑ PASS		

No. 9245G240300016 (SAP-G2W3)				
NO	**NO_2**	**CO**	**CO_2**	
☑ PASS	☑ PASS	☑ PASS	☑ PASS	
PM_1	**$PM_{2.5}$**	**PM_{10}**		
☑ PASS	☑ PASS	☑ PASS		
Temperature	**Humidity**	**Pressure**		
☑ PASS	☑ PASS	☑ PASS		

3.5. Conclusion

The report approves that each calibrated item of the product meets its technical specifications.

Prepared by:	王 [illegible]	Approved by:	钟能伟	Endorsed by:	王志勇

Validation Results Details of Plenum 3

1. AMS before ESP

1.1. Gas validation Data

No.9225A240300020 (SAP-G1W0)								
Validation cycle	QA assessment: NO: 0 ppb, 400 ppb and 800 ppb				QC procedure: NO: 400 ppb			
Passing criteria	± [5] % or ± [5] ppb				± [5] % or ± [5] ppb			
Steps	Reading [ppb]	Error [ppb]	Error [%]	Result	Reading [ppb]	Error [ppb]	Error [%]	Result
NO-0 ppb	1.0	1.0	/	☑ PASS ☐ FAIL	/	/	/	☐ PASS ☐ FAIL
*NO-400 ppb	414.3	14.3	3.58	☑ PASS ☐ FAIL				
NO-800 ppb	790.4	-9.6	-1.20	☑ PASS ☐ FAIL				
Validation cycle	QA assessment: NO_2: 0 ppb, 100ppb and 200 ppb				QC procedure: NO_2: 100 ppb			
Passing criteria	± [5] % or ± [5] ppb				± [5] % or ± [5] ppb			
Steps	Reading [ppb]	Error [ppb]	Error [%]	Result	Reading [ppb]	Error [ppb]	Error [%]	Result
NO_2-0 ppb	1.0	1.0	/	☑ PASS ☐ FAIL	/	/	/	☐ PASS ☐ FAIL
*NO_2-100 ppb	103.8	3.8	3.80	☑ PASS ☐ FAIL				
NO_2-200 ppb	206.8	6.8	3.40	☑ PASS ☐ FAIL				

Note: Normally step 2 (*) is not required for QA checking.

No.9255C240300020 (SAP-G3W5)								
Validation cycle	QA assessment: NO: 0 ppb, 400 ppb and 800 ppb				QC procedure: NO: 400 ppb			
Passing criteria	± [5] % or ± [5] ppb				± [5] % or ± [5] ppb			
Steps	Reading [ppb]	Error [ppb]	Error [%]	Result	Reading [ppb]	Error [ppb]	Error [%]	Result
NO-0 ppb	1.0	1.0	/	☑ PASS ☐ FAIL	/	/	/	☐ PASS ☐ FAIL
*NO-400 ppb	416.7	16.7	4.18	☑ PASS ☐ FAIL				
NO-800 ppb	798.4	-1.6	-0.20	☑ PASS ☐ FAIL				
Validation cycle	QA assessment: NO_2: 0 ppb, 100 ppb, 100 ppb and 200 ppb				QC procedure: NO_2: 100 ppb			
Passing criteria	± [5] % or ± [5] ppb				± [5] % or ± [5] ppb			
Steps	Reading [ppb]	Error [ppb]	Error [%]	Result	Reading [ppb]	Error [ppb]	Error [%]	Result
NO_2-0 ppb	1.0	1.0	/	☑ PASS ☐ FAIL	/	/	/	☐ PASS ☐ FAIL
*NO_2-100 ppb	103.6	3.6	3.60	☑ PASS ☐ FAIL				
NO_2-200 ppb	207.5	7.5	3.75	☑ PASS ☐ FAIL				
Validation cycle	QA assessment: CO: 1 ppm, 2.5 ppm and 5 ppm				QC procedure: CO: 2.5 ppm			
Passing criteria	± [5] %				± [5] %			
Steps	Reading [ppm]	Error [ppm]	Error [%]	Result	Reading [ppm]	Error [ppm]	Error [%]	Result
CO-1 ppm	1.03	0.03	3.00	☑ PASS ☐ FAIL	/	/	/	☐ PASS ☐ FAIL
*CO-2.5 ppm	2.51	0.01	0.40	☑ PASS ☐ FAIL				
CO-5 ppm	5.02	0.02	0.40	☑ PASS ☐ FAIL				
Validation cycle	QA assessment: CO_2: 1000 ppm, 2500 ppm and 5000 ppm				QC procedure: CO_2: 2500 ppm			
Passing criteria	± [5] %				± [5] %			
Steps	Reading [ppm]	Error [ppm]	Error [%]	Result	Reading [ppm]	Error [ppm]	Error [%]	Result
CO_2-1000 ppm	1017.08	17.08	1.71	☑ PASS ☐ FAIL	/	/	/	☐ PASS ☐ FAIL
*CO_2-2500 ppm	2502.78	2.78	0.11	☑ PASS ☐ FAIL				

CO_2-5000 ppm	4856.10	-143.90	-2.88	☑ PASS ☐ FAIL				
Validation cycle	QA assessment: O_3: 0 ppb, 100 ppb, 100 ppb and 200 ppb				QC procedure: O_3: 100 ppb			
Passing criteria	± [5] % or ± [5] ppb				± [5] % or ± [5] ppb			
Steps	Reading [ppb]	Error [ppb]	Error [%]	Result	Reading [ppb]	Error [ppb]	Error [%]	Result
O_3-0 ppb	1.0	1.0	/	☑ PASS ☐ FAIL	/	/	/	☐ PASS ☐ FAIL
*O_3-100 ppb	103.6	3.6	3.60	☑ PASS ☐ FAIL				
O_3-200 ppb	207.9	7.9	3.95	☑ PASS ☐ FAIL				

Note: Normally step 2 (*) is not required for QA checking.

1.2. PM validation Data

No.9225A240300020 (SAP-G1W0)								
Validation cycle	QA assessment: PM_1				QC procedure: PM_1: /			
Passing criteria	± [15] % or ± [5] μg/m³				± [15] % or ± [5] μg/m³			
TS Average [μg/m³]	Reading [μg/m³]	Error [μg/m³]	Error [%]	Result	Reading [μg/m³]	Error [μg/m³]	Error [%]	Result
PM_1-0 μg/m³	0	0	/	☑ PASS ☐ FAIL	/	/	/	☐ PASS ☐ FAIL
*PM_1-34.6μg/m³	34.3	-0.3	-0.87	☑ PASS ☐ FAIL				
PM_1-68.3μg/m³	61.6	-6.7	-9.81	☑ PASS ☐ FAIL				
Validation cycle	QA assessment: $PM_{2.5}$				QC procedure: $PM_{2.5}$: /			
Passing criteria	± [15] % or ± [5] μg/m³				± [15] % or ± [5] μg/m³			
TS Average [μg/m³]	Reading [μg/m³]	Error [μg/m³]	Error [%]	Result	Reading [μg/m³]	Error [μg/m³]	Error [%]	Result
$PM_{2.5}$-0 μg/m³	0	0	/	☑ PASS ☐ FAIL	/	/	/	☐ PASS ☐ FAIL
*$PM_{2.5}$-51.1 μg/m³	53.0	1.9	3.72	☑ PASS ☐ FAIL				
$PM_{2.5}$- 128.8 μg/m³	114.6	-14.2	-11.02	☑ PASS ☐ FAIL				
Validation cycle	QA assessment: PM_{10}				QC procedure: PM_{10}: /			
Passing criteria	± [15] % or ± [5] μg/m³				± [15] % or ± [5] μg/m³			
TS Average [μg/m³]	Reading [μg/m³]	Error [μg/m³]	Error [%]	Result	Reading [μg/m³]	Error [μg/m³]	Error [%]	Result
PM_{10}-0 μg/m³	0	0	/	☑ PASS ☐ FAIL	/	/	/	☐ PASS ☐ FAIL
*PM_{10}-80.5 μg/m³	82.6	2.1	2.61	☑ PASS ☐ FAIL				
PM_{10}-236.5μg/m³	232.9	-3.6	-1.52	☑ PASS ☐ FAIL				

Note: 1. For PM validation, the reading of transfer standard (TS) will be used as reference. TS Average sourced from MAS-AF300 (N0.9255C240300012). 2. Normally step 2 (*) is not required for QA checking.

No.9255C240300020 (SAP-G3W5)								
Validation cycle	QA assessment: PM_1				QC procedure: PM_1: /			
Passing criteria	± [15] % or ± [5] μg/m³				± [15] % or ± [5] μg/m³			
TS Average [μg/m³]	Reading [μg/m³]	Error [μg/m³]	Error [%]	Result	Reading [μg/m³]	Error [μg/m³]	Error [%]	Result
PM_1-0 μg/m³	0	0	/	☑ PASS ☐ FAIL	/	/	/	☐ PASS ☐ FAIL
*PM_1-30.5 μg/m³	30.6	0.1	0.33	☑ PASS ☐ FAIL				
PM_1-68.9μg/m³	65.2	-3.7	-5.37	☑ PASS ☐ FAIL				
Validation cycle	QA assessment: $PM_{2.5}$				QC procedure: $PM_{2.5}$: /			
Passing criteria	± [15] % or ± [5] μg/m³				± [15] % or ± [5] μg/m³			
TS Average [μg/m³]	Reading [μg/m³]	Error [μg/m³]	Error [%]	Result	Reading [μg/m³]	Error [μg/m³]	Error [%]	Result
$PM_{2.5}$-0 μg/m³	0	0	/	☑ PASS ☐ FAIL	/	/	/	☐ PASS

*$PM_{2.5}$-42.9 μg/m³	44.5	1.6	3.73	☑ PASS ☐ FAIL				☐ FAIL
$PM_{2.5}$-128.6μg/m³	118.7	-9.9	-7.70	☑ PASS ☐ FAIL				
Validation cycle	QA assessment: PM_{10}				QC procedure: PM_{10}: /			
Passing criteria	± [15] % or ± [5] μg/m³				± [15] % or ± [5] μg/m³			
TS Average [μg/m³]	Reading [μg/m³]	Error [μg/m³]	Error [%]	Result	Reading [μg/m³]	Error [μg/m³]	Error [%]	Result
PM_{10}-0 μg/m³	0	0	/	☑ PASS ☐ FAIL	/	/	/	☐ PASS ☐ FAIL
*PM_{10}-78.8 μg/m³	85.0	6.2	7.87	☑ PASS ☐ FAIL				
PM_{10}-250.5μg/m³	249.4	-1.1	-0.44	☑ PASS ☐ FAIL				

Note: 1. For PM validation, the reading of transfer standard (TS) will be used as reference. TS Average sourced from MAS-AF300 (N0.9255C240300012). 2. Normally step 2 (*) is not required for QA checking.

1.3. Weather Station Validation Data

The SBS method for weather station validation requires the setup of calibrated TS side by side with MAS-AF300, and operation of the MAS and reference analysers as data source input for validation in this project.

No.9255C240300020 (SAP-G3W5)			
Parameters	Sensor Average	Error	Result
Temperature ± 1 ℃	TS Average=29.3℃		
	28.7℃	-0.6℃	☑ PASS ☐ FAIL
Humidity ± 3% RH	TS Average=71.9% RH		
	70.1% RH	-1.8% RH	☑ PASS ☐ FAIL
Pressure ±1 hPa	TS Average=997.0 hPa		
	996.6 hPa	-0.4 hPa	☑ PASS ☐ FAIL

Note: For weather station validation, the reading of transfer standard (TS) will be used as reference. TS Average sourced from MAS-AF300 (N0.9255C240300012).

1.4. Validation Result Summary

No. 9225A240300020 (SAP-G1W0)				
NO	**NO_2**			
☑ PASS	☑ PASS			
PM_1	**$PM_{2.5}$**	**PM_{10}**		
☑ PASS	☑ PASS	☑ PASS		

No. 9255C240300020 (SAP-G3W5)				
NO	**NO_2**	**CO**	**CO_2**	**O_3**
☑ PASS	☑ PASS	☑ PASS	☑ PASS	☑ PASS
PM_1	**$PM_{2.5}$**	**PM_{10}**		
☑ PASS	☑ PASS	☑ PASS		
Temperature	**Humidity**	**Pressure**		
☑ PASS	☑ PASS	☑ PASS		

1.5. Conclusion

The report approves that each calibrated item of the product meets its technical specifications.

Prepared by:	王家	Approved by:	钟敏信	Endorsed by:	王志勇

3. AMS after DE-NO2 filter

3.1. Gas validation Data

No.9225A240300027 (SAP-G1W0)								
Validation cycle	QA assessment: NO: 0 ppb, 400 ppb and 800 ppb				QC procedure: NO: 400 ppb			
Passing criteria	± [5] % or ± [5] ppb				± [5] % or ± [5] ppb			
Steps	Reading [ppb]	Error [ppb]	Error [%]	Result	Reading [ppb]	Error [ppb]	Error [%]	Result
NO-0 ppb	1.0	1.0	/	☑ PASS ☐ FAIL	/	/	/	☐ PASS ☐ FAIL
*NO-400 ppb	418.4	18.4	4.60	☑ PASS ☐ FAIL				
NO-800 ppb	788.9	-11.1	-1.39	☑ PASS ☐ FAIL				
Validation cycle	QA assessment: NO_2: 0 ppb, 100 ppb and 200 ppb				QC procedure: NO_2: 100 ppb			
Passing criteria	± [5] % or ± [5] ppb				± [5] % or ± [5] ppb			
Steps	Reading [ppb]	Error [ppb]	Error [%]	Result	Reading [ppb]	Error [ppb]	Error [%]	Result
NO_2-0 ppb	1.0	1.0	/	☑ PASS ☐ FAIL	/	/	/	☐ PASS ☐ FAIL
*NO_2-100 ppb	102.4	2.4	2.40	☑ PASS ☐ FAIL				
NO_2-200 ppb	202.9	2.9	1.45	☑ PASS ☐ FAIL				

Note: Normally step 2 (*) is not required for QA checking.

No.9245G240300011 (SAP-G2W3)								
Validation cycle	QA assessment: NO: 0 ppb, 400 ppb and 800 ppb				QC procedure: NO: 400 ppb			
Passing criteria	± [5] % or ± [5] ppb				± [5] % or ± [5] ppb			
Steps	Reading [ppb]	Error [ppb]	Error [%]	Result	Reading [ppb]	Error [ppb]	Error [%]	Result
NO-0 ppb	1.0	1.0	/	☑ PASS ☐ FAIL	/	/	/	☐ PASS ☐ FAIL
*NO-400 ppb	417.5	17.5	4.38	☑ PASS ☐ FAIL				
NO-800 ppb	792.2	-7.8	-0.97	☑ PASS ☐ FAIL				
Validation cycle	QA assessment: NO_2: 0 ppb, 100 ppb and 200 ppb				QC procedure: NO_2: 100 ppb			
Passing criteria	± [5] % or ± [5] ppb				± [5] % or ± [5] ppb			
Steps	Reading [ppb]	Error [ppb]	Error [%]	Result	Reading [ppb]	Error [ppb]	Error [%]	Result
NO_2-0 ppb	1.0	1.0	/	☑ PASS ☐ FAIL	/	/	/	☐ PASS ☐ FAIL
*NO_2-100 ppb	103.7	3.7	3.70	☑ PASS ☐ FAIL				
NO_2-200 ppb	203.0	3.0	1.50	☑ PASS ☐ FAIL				
Validation cycle	QA assessment: CO: 1 ppm, 2.5 ppm and 5 ppm				QC procedure: CO: 2.5 ppm			
Passing criteria	± [5] %				± [5] %			
Steps	Reading [ppm]	Error [ppm]	Error [%]	Result	Reading [ppm]	Error [ppm]	Error [%]	Result
CO-1 ppm	1.01	0.01	1.00	☑ PASS ☐ FAIL	/	/	/	☐ PASS ☐ FAIL
*CO-2.5 ppm	2.47	-0.03	-1.20	☑ PASS ☐ FAIL				
CO-5 ppm	4.99	-0.01	-0.20	☑ PASS ☐ FAIL				
Validation cycle	QA assessment:CO_2: 1000 ppm, 2500 ppm and 5000 ppm				QC procedure: CO_2: 2500 ppm			
Passing criteria	± [5] %				± [5] %			
Steps	Reading [ppm]	Error [ppm]	Error [%]	Result	Reading [ppm]	Error [ppm]	Error [%]	Result
CO_2-1000 ppm	1013.61	13.61	1.36	☑ PASS ☐ FAIL	/	/	/	☐ PASS ☐ FAIL
*CO_2-2500 ppm	2493.12	-6.88	-0.28	☑ PASS ☐ FAIL				
CO_2-5000 ppm	5032.47	32.47	0.65	☑ PASS ☐ FAIL				

Note: Normally step 2 (*) is not required for QA checking.

3.2. PM validation Data

No.9225A240300027 (SAP-G1W0)								
Validation cycle	QA assessment: PM_1				QC procedure: PM_1: /			
Passing criteria	± [15] % or ± [5] μg/m³				± [15] % or ± [5] μg/m³			
TS Average [μg/m³]	Reading [μg/m³]	Error [μg/m³]	Error [%]	Result	Reading [μg/m³]	Error [μg/m³]	Error [%]	Result
PM_1-0 μg/m³	0	0	/	☑ PASS ☐ FAIL	/	/	/	☐ PASS ☐ FAIL
*PM_1-29.5 μg/m³	26.9	-2.6	-8.81	☑ PASS ☐ FAIL				
PM_1-72.3μg/m³	63.1	-9.2	-12.72	☑ PASS ☐ FAIL				
Validation cycle	QA assessment: $PM_{2.5}$				QC procedure: $PM_{2.5}$: /			
Passing criteria	± [15] % or ± [5] μg/m³				± [15] % or ± [5] μg/m³			
TS Average [μg/m³]	Reading [μg/m³]	Error [μg/m³]	Error [%]	Result	Reading [μg/m³]	Error [μg/m³]	Error [%]	Result
$PM_{2.5}$-0 μg/m³	0	0	/	☑ PASS ☐ FAIL	/	/	/	☐ PASS ☐ FAIL
*$PM_{2.5}$-38.3 μg/m³	35.3	-3.0	-7.83	☑ PASS ☐ FAIL				
$PM_{2.5}$- 121.8μg/m³	132.4	10.6	8.70	☑ PASS ☐ FAIL				
Validation cycle	QA assessment: PM_{10}				QC procedure: PM_{10}: /			
Passing criteria	± [15] % or ± [5] μg/m³				± [15] % or ± [5] μg/m³			
TS Average [μg/m³]	Reading [μg/m³]	Error [μg/m³]	Error [%]	Result	Reading [μg/m³]	Error [μg/m³]	Error [%]	Result
PM_{10}-0 μg/m³	0	0	/	☑ PASS ☐ FAIL	/	/	/	☐ PASS ☐ FAIL
*PM_{10}-57.8 μg/m³	52.2	-5.6	-9.69	☑ PASS ☐ FAIL				
PM_{10}-178.6μg/m³	199.9	21.3	11.93	☑ PASS ☐ FAIL				

Note: 1. For PM validation, the reading of transfer standard (TS) will be used as reference. TS Average sourced from MAS-AF300 (N0.9255C240300008). 2. Normally step 2 (*) is not required for QA checking.

No.9245G240300011 (SAP-G2W3)								
Validation cycle	QA assessment: PM_1				QC procedure: PM_1: /			
Passing criteria	± [15] % or ± [5] μg/m³				± [15] % or ± [5] μg/m³			
TS Average [μg/m³]	Reading [μg/m³]	Error [μg/m³]	Error [%]	Result	Reading [μg/m³]	Error [μg/m³]	Error [%]	Result
PM_1-0 μg/m³	0	0	/	☑ PASS ☐ FAIL	/	/	/	☐ PASS ☐ FAIL
*PM_1-30.5 μg/m³	26.3	-4.2	-13.77	☑ PASS ☐ FAIL				
PM_1-67.9μg/m³	59.7	-8.2	-12.08	☑ PASS ☐ FAIL				
Validation cycle	QA assessment: $PM_{2.5}$				QC procedure: $PM_{2.5}$: /			
Passing criteria	± [15] % or ± [5] μg/m³				± [15] % or ± [5] μg/m³			
TS Average [μg/m³]	Reading [μg/m³]	Error [μg/m³]	Error [%]	Result	Reading [μg/m³]	Error [μg/m³]	Error [%]	Result
$PM_{2.5}$-0 μg/m³	0	0	/	☑ PASS ☐ FAIL	/	/	/	☐ PASS ☐ FAIL
*$PM_{2.5}$-40.5μg/m³	35.3	-5.2	-12.84	☑ PASS ☐ FAIL				
$PM_{2.5}$-112.5μg/m³	114.9	2.4	2.13	☑ PASS ☐ FAIL				
Validation cycle	QA assessment: PM_{10}				QC procedure: PM_{10}: /			
Passing criteria	± [15] % or ± [5] μg/m³				± [15] % or ± [5] μg/m³			
TS Average [μg/m³]	Reading [μg/m³]	Error [μg/m³]	Error [%]	Result	Reading [μg/m³]	Error [μg/m³]	Error [%]	Result
PM_{10}-0 μg/m³	0	0	/	☑ PASS ☐ FAIL	/	/	/	☐ PASS

*PM_{10}-62.2 μg/m³	59.0	-3.2	-5.14	☑ PASS ☐ FAIL				☐ FAIL
PM_{10}-165.5μg/m³	162.3	-3.2	-1.93	☑ PASS ☐ FAIL				

Note: 1. For PM validation, the reading of transfer standard (TS) will be used as reference. TS Average sourced from MAS-AF300 (N0.9255C240300008). 2. Normally step 2 (*) is not required for QA checking.

3.3. Weather Station Validation Data

The SBS method for weather station validation requires the setup of calibrated TS side by side with MAS-AF300, and operation of the MAS and reference analysers as data source input for validation in this project.

No.9245G240300011 (SAP-G2W3)			
Parameters	Sensor Average	Error	Result
Temperature ± 1℃	TS Average=31.7℃		
	32.5℃	0.8℃	☑ PASS ☐ FAIL
Humidity ± 3% RH	TS Average=60.3% RH		
	59.7% RH	-0.6% RH	☑ PASS ☐ FAIL
Pressure ±1 hPa	TS Average=997.1 hPa		
	997.0 hPa	-0.1 hPa	☑ PASS ☐ FAIL

Note: For weather station validation, the reading of transfer standard (TS) will be used as reference. TS Average sourced from MAS-AF300 (N0.9255C240300008).

3.4. Validation Result Summary

No. 9225A240300027 (SAP-G1W0)				
NO	**NO_2**			
☑ PASS	☑ PASS			
PM_1	**$PM_{2.5}$**	**PM_{10}**		
☑ PASS	☑ PASS	☑ PASS		

No. 9245G240300011 (SAP-G2W3)				
NO	**NO_2**	**CO**	**CO_2**	
☑ PASS	☑ PASS	☑ PASS	☑ PASS	
PM_1	**$PM_{2.5}$**	**PM_{10}**		
☑ PASS	☑ PASS	☑ PASS		
Temperature	**Humidity**	**Pressure**		
☑ PASS	☑ PASS	☑ PASS		

3.5. Conclusion

The report approves that each calibrated item of the product meets its technical specifications.

Prepared by:	王茅	Approved by:	钟胎儿	Endorsed by:	王志勇

AMS Testing and Commissioning Record

SAPIENS

MAS Model	MAS-AF300
Report ID	Onsite Validation Record_KVB_Plenum
Test date	2025-08-07 to 2025-08-11
Report Date	2025-08-25
Version	1.1

Description

Sapiens Sensor AMS has implemented the state-of-the-art air sensing technology to provide its users reliable and near-reference air quality data. It is designed with strict Quality Assurance and Quality Control (QA/QC) schemes to achieve the fit-for-purpose and accurate measurement results to attain different data quality objectives fit for professional applications.
All units have already been calibrated at the factory, however, considering of the transportation from factory to site, all the devices shall be further verified on- site prior to tunnel commissioning.

Traceability of Reference Instrument:

As a key QAQC tool, Sapiens Sensor Calibration Kit is designed to provide traceable gas of known concentration at ambient humidity and PM standards to calibrate Sapiens sensor products during the field operation. The model for the instruments is listed below.
1) Portable Sensor Calibrator (PSC) for targeting standard gas during onsite validation work;
2) Portable Aerosol Generator (PAG) generate stable flow and concentration of particulate matters with range of sizes simultaneously.

Pollutant	Calibration Instruments	Model	Serial No.
NO	Portable Sensor Calibrator	PSC-100	9913Z230700001
NO_2	Portable Sensor Calibrator		
O_3	Portable Sensor Calibrator		
CO	Portable Sensor Calibrator	PSC-200	9913Z250400001
CO_2	Portable Sensor Calibrator		
PM	Portable Aerosol Generator	PAG-100	9916Z240100001

Installation location and device ID information section

Air Purification System	Location	Serial No. of MAS
KVB_Plenum 1	Before ESP	~~9225A240300034 (SAP-G1W0)~~ 9255C240300011 (SAP-G3W5)
	Between ESP & DE-NO_2 filter	~~9225A240300018 (SAP-G1W0)~~ 9255C240300004 (SAP-G3W5)
	After DE-NO_2 filter	~~9225A240300035 (SAP-G1W0)~~ 9245G240300005 (SAP-G2W3)
KVB_Plenum 2	Before ESP	~~9225A240300005 (SAP-G1W0)~~ 9255C240300025 (SAP-G3W5)
	Between ESP & DE-NO_2 filter	~~9225A240300037 (SAP-G1W0)~~ 9255C240300010 (SAP-G3W5)
	After DE-NO_2 filter	~~9225A240300012 (SAP-G1W0)~~ 9245G240300014 (SAP-G2W3)
KVB_Plenum 3	Before ESP	~~9225A240300014 (SAP-G1W0)~~ 9255C240300013 (SAP-G3W5)
	Between ESP & DE-NO_2 filter	~~9225A240300013 (SAP-G1W0)~~ 9255C240300016 (SAP-G3W5)
	After DE-NO_2 filter	~~9225A240300015 (SAP-G1W0)~~ 9245G240300013 (SAP-G2W3)

Data quality passing criteria of AMS

Parameters	Passing criteria
NO	± [5] % or ± [5] ppb, whichever greater
NO_2	± [5] % or ± [5] ppb, whichever greater

Parameters	Passing criteria
CO	± [5] %
CO_2	± [5] %
O_3	± [5] % or ± [5] ppb, whichever greater
PM_1	± [15] % or ± [5] μg/m^3, whichever greater
$PM_{2.5}$	± [15] % or ± [5] μg/m^3, whichever greater
PM_{10}	± [15] % or ± [5] μg/m^3, whichever greater
Temperature	± 1℃
Humidity	± 3% RH
Pressure	± 1 hPa

Validation Results Details of Plenum 1

1. AMS before ESP

1.1. Gas validation Data

No.9225A240300034 (SAP-G1W0)								
Validation cycle	QA assessment: NO: 0 ppb, 400 ppb and 800 ppb				QC procedure: NO: 400 ppb			
Passing criteria	± [5] % or ± [5] ppb				± [5] % or ± [5] ppb			
Steps	Reading [ppb]	Error [ppb]	Error [%]	Result	Reading [ppb]	Error [ppb]	Error [%]	Result
NO-0 ppb	1.0	1.0	/	☑ PASS ☐ FAIL	/	/	/	☐ PASS ☐ FAIL
*NO-400 ppb	411.7	11.7	2.93	☑ PASS ☐ FAIL				
NO-800 ppb	796.6	-3.4	-0.42	☑ PASS ☐ FAIL				
Validation cycle	QA assessment: NO_2: 0 ppb, 100 ppb and 200 ppb				QC procedure: NO_2: 100 ppb			
Passing criteria	± [5] % or ± [5] ppb				± [5] % or ± [5] ppb			
Steps	Reading [ppb]	Error [ppb]	Error [%]	Result	Reading [ppb]	Error [ppb]	Error [%]	Result
NO_2-0 ppb	1.0	1.0	/	☑ PASS ☐ FAIL	/	/	/	☐ PASS ☐ FAIL
*NO_2-100 ppb	99.4	-0.6	-0.60	☑ PASS ☐ FAIL				
NO_2-200 ppb	204.1	4.1	2.05	☑ PASS ☐ FAIL				

Note: Normally step 2 (*) is not required for QA checking.

No.9255C240300011 (SAP-G3W5)								
Validation cycle	QA assessment: NO: 0 ppb, 400 ppb and 800 ppb				QC procedure: NO: 400 ppb			
Passing criteria	± [5] % or ± [5] ppb				± [5] % or ± [5] ppb			
Steps	Reading [ppb]	Error [ppb]	Error [%]	Result	Reading [ppb]	Error [ppb]	Error [%]	Result
NO-0 ppb	1.0	1.0	/	☑ PASS ☐ FAIL	/	/	/	☐ PASS ☐ FAIL
*NO-400 ppb	412.3	12.3	3.08	☑ PASS ☐ FAIL				
NO-800 ppb	794.5	-5.5	-0.69	☑ PASS ☐ FAIL				
Validation cycle	QA assessment: NO_2: 0 ppb, 100 ppb and 200 ppb				QC procedure: NO_2: 100 ppb			
Passing criteria	± [5] % or ± [5] ppb				± [5] % or ± [5] ppb			
Steps	Reading [ppb]	Error [ppb]	Error [%]	Result	Reading [ppb]	Error [ppb]	Error [%]	Result
NO_2-0 ppb	1.0	1.0	/	☑ PASS ☐ FAIL	/	/	/	☐ PASS ☐ FAIL
*NO_2-100 ppb	100.9	0.9	0.90	☑ PASS ☐ FAIL				
NO_2-200 ppb	204.5	4.5	2.25	☑ PASS ☐ FAIL				
Validation cycle	QA assessment: CO: 1 ppm, 2.5 ppm and 5 ppm				QC procedure: CO: 2.5 ppm			
Passing criteria	± [5] %				± [5] %			
Steps	Reading [ppm]	Error [ppm]	Error [%]	Result	Reading [ppm]	Error [ppm]	Error [%]	Result
CO-1 ppm	0.96	-0.04	-4.00	☑ PASS ☐ FAIL	/	/	/	☐ PASS ☐ FAIL
*CO-2.5 ppm	2.46	-0.04	-1.60	☑ PASS ☐ FAIL				
CO-5 ppm	5.21	0.21	4.20	☑ PASS ☐ FAIL				
Validation cycle	QA assessment: CO_2: 1000 ppm, 2500 ppm and 5000 ppm				QC procedure: CO_2: 2500 ppm			
Passing criteria	± [5] %				± [5] %			
Steps	Reading [ppm]	Error [ppm]	Error [%]	Result	Reading [ppm]	Error [ppm]	Error [%]	Result
CO_2-1000 ppm	1020.49	20.49	2.05	☑ PASS ☐ FAIL	/	/	/	☐ PASS ☐ FAIL
*CO_2-2500 ppm	2474.08	-25.92	-1.04	☑ PASS ☐ FAIL				

CO_2-5000 ppm	5073.61	73.61	1.47	☑ PASS ☐ FAIL				
Validation cycle	QA assessment: O_3: 0 ppb, 100 ppb and 200 ppb				QC procedure: O_3: 100 ppb			
Passing criteria	± [5] % or ± [5] ppb				± [5] % or ± [5] ppb			
Steps	Reading [ppb]	Error [ppb]	Error [%]	Result	Reading [ppb]	Error [ppb]	Error [%]	Result
O_3-0 ppb	1.0	1.0	/	☑ PASS ☐ FAIL	/	/	/	☐ PASS ☐ FAIL
*O_3-100 ppb	103.7	3.7	3.70	☑ PASS ☐ FAIL				
O_3-200 ppb	204	4	2.00	☑ PASS ☐ FAIL				

Note: Normally step 2 (*) is not required for QA checking.

1.2. PM validation Data

No.9225A240300034 (SAP-G1W0)								
Validation cycle	QA assessment: PM_1				QC procedure: PM_1: /			
Passing criteria	± [15] % or ± [5] μg/m³				± [15] % or ± [5] μg/m³			
TS Average [μg/m³]	Reading [μg/m³]	Error [μg/m³]	Error [%]	Result	Reading [μg/m³]	Error [μg/m³]	Error [%]	Result
PM_1-0 μg/m³	0	0	/	☑ PASS ☐ FAIL	/	/	/	☐ PASS ☐ FAIL
*PM_1-56.1μg/m³	59.1	3	5.35	☑ PASS ☐ FAIL				
PM_1-91.3μg/m³	94.4	3.1	3.40	☑ PASS ☐ FAIL				
Validation cycle	QA assessment: $PM_{2.5}$				QC procedure: $PM_{2.5}$: /			
Passing criteria	± [15] % or ± [5] μg/m³				± [15] % or ± [5] μg/m³			
TS Average [μg/m³]	Reading [μg/m³]	Error [μg/m³]	Error [%]	Result	Reading [μg/m³]	Error [μg/m³]	Error [%]	Result
$PM_{2.5}$-0 μg/m³	0	0	/	☑ PASS ☐ FAIL	/	/	/	☐ PASS ☐ FAIL
*$PM_{2.5}$-111.6μg/m³	105.2	-6.4	-5.73	☑ PASS ☐ FAIL				
$PM_{2.5}$-175.2μg/m³	179.5	4.3	2.45	☑ PASS ☐ FAIL				
Validation cycle	QA assessment: PM_{10}				QC procedure: PM_{10}: /			
Passing criteria	± [15] % or ± [5] μg/m³				± [15] % or ± [5] μg/m³			
TS Average [μg/m³]	Reading [μg/m³]	Error [μg/m³]	Error [%]	Result	Reading [μg/m³]	Error [μg/m³]	Error [%]	Result
PM_{10}-0 μg/m³	0	0	/	☑ PASS ☐ FAIL	/	/	/	☐ PASS ☐ FAIL
*PM_{10}-172.7μg/m³	168.7	-4	-2.32	☑ PASS ☐ FAIL				
PM_{10}-274.4μg/m³	282.6	8.2	2.99	☑ PASS ☐ FAIL				

Note: 1. For PM validation, the reading of transfer standard (TS) will be used as reference. TS Average sourced from MAS-AF300 (No.9255C240100002). 2. Normally step 2 (*) is not required for QA checking.

No.9255C240300011 (SAP-G3W5)								
Validation cycle	QA assessment: PM_1				QC procedure: PM_1: /			
Passing criteria	± [15] % or ± [5] μg/m³				± [15] % or ± [5] μg/m³			
TS Average [μg/m³]	Reading [μg/m³]	Error [μg/m³]	Error [%]	Result	Reading [μg/m³]	Error [μg/m³]	Error [%]	Result
PM_1-0 μg/m³	0	0	/	☑ PASS ☐ FAIL	/	/	/	☐ PASS ☐ FAIL
*PM_1-58.1μg/m³	56	-2.1	-3.61	☑ PASS ☐ FAIL				
PM_1-87.6μg/m³	88.2	0.6	0.68	☑ PASS ☐ FAIL				
Validation cycle	QA assessment: $PM_{2.5}$				QC procedure: $PM_{2.5}$: /			
Passing criteria	± [15] % or ± [5] μg/m³				± [15] % or ± [5] μg/m³			
TS Average [μg/m³]	Reading [μg/m³]	Error [μg/m³]	Error [%]	Result	Reading [μg/m³]	Error [μg/m³]	Error [%]	Result

$PM_{2.5}$-0 μg/m³	0	0	/	☑ PASS ☐ FAIL	/	/	/	☐ PASS ☐ FAIL
*$PM_{2.5}$-105.8μg/m³	108.3	2.5	2.36	☑ PASS ☐ FAIL				
$PM_{2.5}$-165.0μg/m³	169	4	2.42	☑ PASS ☐ FAIL				
Validation cycle	QA assessment: PM_{10}				QC procedure: PM_{10}: /			
Passing criteria	± [15] % or ± [5] μg/m³				± [15] % or ± [5] μg/m³			
TS Average [μg/m³]	Reading [μg/m³]	Error [μg/m³]	Error [%]	Result	Reading [μg/m³]	Error [μg/m³]	Error [%]	Result
PM_{10}-0 μg/m³	0	0	/	☑ PASS ☐ FAIL	/	/	/	☐ PASS ☐ FAIL
*PM_{10}-165.8μg/m³	173.9	8.1	4.89	☑ PASS ☐ FAIL				
PM_{10}-247.4μg/m³	252.2	4.8	1.94	☑ PASS ☐ FAIL				

Note: 1. For PM validation, the reading of transfer standard (TS) will be used as reference. TS Average sourced from MAS-AF300 (No.9255C240100002). 2. Normally step 2 (*) is not required for QA checking.

1.3. Weather Station Validation Data

The SBS method for weather station validation requires the setup of calibrated TS side by side with MAS-AF300, and operation of the MAS and reference analysers as data source input for validation in this project.

No.9255C240300011 (SAP-G3W5)			
Parameters	Sensor Average	Error	Result
Temperature ± 1℃	TS Average=29.8℃		
	29.2℃	-0.6℃	☑ PASS ☐ FAIL
Humidity ± 3% RH	TS Average=83.7% RH		
	85.9% RH	-1.4% RH	☑ PASS ☐ FAIL
Pressure ±1 hPa	TS Average=1008.9 hPa		
	1008.6 hPa	-0.3 hPa	☑ PASS ☐ FAIL

Note: For weather station validation, the reading of transfer standard (TS) will be used as reference. TS Average sourced from MAS-AF300 (No.9255C240100002).

1.4. Validation Result Summary

No. 9225A240300034 (SAP-G1W0)				
NO	**NO_2**			
☑ PASS	☑ PASS			
PM_1	**$PM_{2.5}$**	**PM_{10}**		
☑ PASS	☑ PASS	☑ PASS		

No. 9255C240300011 (SAP-G3W5)				
NO	**NO_2**	**CO**	**CO_2**	**O_3**
☑ PASS	☑ PASS	☑ PASS	☑ PASS	☑ PASS
PM_1	**$PM_{2.5}$**	**PM_{10}**		
☑ PASS	☑ PASS	☑ PASS		
Temperature	**Humidity**	**Pressure**		
☑ PASS	☑ PASS	☑ PASS		

1.5. Conclusion

The report approves that each calibrated item of the product meets its technical specifications.

Prepared by:		Approved by:		Endorsed by:	

3. AMS after DE-NO2 filter

3.1. Gas validation Data

No.9225A240300035 (SAP-G1W0)								
Validation cycle	QA assessment: NO: 0 ppb, 400 ppb and 800 ppb				QC procedure: NO: 400 ppb			
Passing criteria	± [5] % or ± [5] ppb				± [5] % or ± [5] ppb			
Steps	Reading [ppb]	Error [ppb]	Error [%]	Result	Reading [ppb]	Error [ppb]	Error [%]	Result
NO-0 ppb	1.0	1.0	/	☑ PASS ☐ FAIL	/	/	/	☐ PASS ☐ FAIL
*NO-400 ppb	418.9	18.9	4.72	☑ PASS ☐ FAIL				
NO-800 ppb	833.6	33.6	4.20	☑ PASS ☐ FAIL				
Validation cycle	QA assessment: NO_2: 0 ppb, 100 ppb and 200 ppb				QC procedure: NO_2: 100 ppb			
Passing criteria	± [5] % or ± [5] ppb				± [5] % or ± [5] ppb			
Steps	Reading [ppb]	Error [ppb]	Error [%]	Result	Reading [ppb]	Error [ppb]	Error [%]	Result
NO_2-0 ppb	1.0	1.0	/	☑ PASS ☐ FAIL	/	/	/	☐ PASS ☐ FAIL
*NO_2-100 ppb	97.1	-2.9	-2.90	☑ PASS ☐ FAIL				
NO_2-200 ppb	208.9	8.9	4.45	☑ PASS ☐ FAIL				

Note: Normally step 2 (*) is not required for QA checking.

No.9245G240300005 (SAP-G2W3)								
Validation cycle	QA assessment: NO: 0 ppb, 400 ppb and 800 ppb				QC procedure: NO: 400 ppb			
Passing criteria	± [5] % or ± [5] ppb				± [5] % or ± [5] ppb			
Steps	Reading [ppb]	Error [ppb]	Error [%]	Result	Reading [ppb]	Error [ppb]	Error [%]	Result
NO-0 ppb	1.0	1.0	/	☑ PASS ☐ FAIL	/	/	/	☐ PASS ☐ FAIL
*NO-400 ppb	415.1	15.1	3.78	☑ PASS ☐ FAIL				
NO-800 ppb	832.8	32.8	4.10	☑ PASS ☐ FAIL				
Validation cycle	QA assessment: NO_2: 0 ppb, 100 ppb and 200 ppb				QC procedure: NO_2: 100 ppb			
Passing criteria	± [5] % or ± [5] ppb				± [5] % or ± [5] ppb			
Steps	Reading [ppb]	Error [ppb]	Error [%]	Result	Reading [ppb]	Error [ppb]	Error [%]	Result
NO_2-0 ppb	1.0	1.0	/	☑ PASS ☐ FAIL	/	/	/	☐ PASS ☐ FAIL
*NO_2-100 ppb	100	0	0.00	☑ PASS ☐ FAIL				
NO_2-200 ppb	206.6	6.6	3.30	☑ PASS ☐ FAIL				
Validation cycle	QA assessment: CO: 1 ppm, 2.5 ppm and 5 ppm				QC procedure: CO: 2.5 ppm			
Passing criteria	± [5] %				± [5] %			
Steps	Reading [ppm]	Error [ppm]	Error [%]	Result	Reading [ppm]	Error [ppm]	Error [%]	Result
CO-1 ppm	1.04	0.04	4.00	☑ PASS ☐ FAIL	/	/	/	☐ PASS ☐ FAIL
*CO-2.5 ppm	2.56	0.06	2.40	☑ PASS ☐ FAIL				
CO-5 ppm	5.12	0.12	2.40	☑ PASS ☐ FAIL				
Validation cycle	QA assessment: CO_2: 1000 ppm, 2500 ppm and 5000 ppm				QC procedure: CO_2: 2500 ppm			
Passing criteria	± [5] %				± [5] %			
Steps	Reading [ppm]	Error [ppm]	Error [%]	Result	Reading [ppm]	Error [ppm]	Error [%]	Result
CO_2-1000 ppm	1044.1	44.1	4.41	☑ PASS ☐ FAIL	/	/	/	☐ PASS ☐ FAIL
*CO_2-2500 ppm	2408.4	-91.6	-3.66	☑ PASS ☐ FAIL				
CO_2-5000 ppm	5190.6	190.6	3.81	☑ PASS ☐ FAIL				

Note: Normally step 2 (*) is not required for QA checking.

3.2. PM validation Data

No.9225A240300035 (SAP-G1W0)								
Validation cycle	QA assessment: PM_1				QC procedure: PM_1: /			
Passing criteria	± [15] % or ± [5] μg/m³				± [15] % or ± [5] μg/m³			
TS Average [μg/m³]	Reading [μg/m³]	Error [μg/m³]	Error [%]	Result	Reading [μg/m³]	Error [μg/m³]	Error [%]	Result
PM_1-0 μg/m³	0	0	/	☑ PASS ☐ FAIL	/	/	/	☐ PASS ☐ FAIL
*PM_1-58.4μg/m³	60.9	2.5	4.28	☑ PASS ☐ FAIL				
PM_1-87.2μg/m³	91.7	4.5	5.16	☑ PASS ☐ FAIL				
Validation cycle	QA assessment: $PM_{2.5}$				QC procedure: $PM_{2.5}$: /			
Passing criteria	± [15] % or ± [5] μg/m³				± [15] % or ± [5] μg/m³			
TS Average [μg/m³]	Reading [μg/m³]	Error [μg/m³]	Error [%]	Result	Reading [μg/m³]	Error [μg/m³]	Error [%]	Result
$PM_{2.5}$-0 μg/m³	0.8	0.8	/	☑ PASS ☐ FAIL	/	/	/	☐ PASS ☐ FAIL
*$PM_{2.5}$-101.0μg/m³	105	4.0	3.96	☑ PASS ☐ FAIL				
$PM_{2.5}$- 150.7μg/m³	147.6	-3.1	-2.06	☑ PASS ☐ FAIL				
Validation cycle	QA assessment: PM_{10}				QC procedure: PM_{10}: /			
Passing criteria	± [15] % or ± [5] μg/m³				± [15] % or ± [5] μg/m³			
TS Average [μg/m³]	Reading [μg/m³]	Error [μg/m³]	Error [%]	Result	Reading [μg/m³]	Error [μg/m³]	Error [%]	Result
PM_{10}-0 μg/m³	0.9	0.9	/	☑ PASS ☐ FAIL	/	/	/	☐ PASS ☐ FAIL
*PM_{10}- 174.2μg/m³	170.2	-4.0	-2.30	☑ PASS ☐ FAIL				
PM_{10}- 235.7μg/m³	238.4	2.7	1.15	☑ PASS ☐ FAIL				

Note: 1. For PM validation, the reading of transfer standard (TS) will be used as reference. TS Average sourced from MAS-AF300 (No.9255C240300008). 2. Normally step 2 (*) is not required for QA checking.

No.9245G240300005 (SAP-G2W3)								
Validation cycle	QA assessment: PM_1				QC procedure: PM_1: /			
Passing criteria	± [15] % or ± [5] μg/m³				± [15] % or ± [5] μg/m³			
TS Average [μg/m³]	Reading [μg/m³]	Error [μg/m³]	Error [%]	Result	Reading [μg/m³]	Error [μg/m³]	Error [%]	Result
PM_1-0 μg/m³	0	0	/	☑ PASS ☐ FAIL	/	/	/	☐ PASS ☐ FAIL
*PM_1-56.6μg/m³	54.9	-1.7	-3.00	☑ PASS ☐ FAIL				
PM_1-86.7μg/m³	86.7	0.0	0.00	☑ PASS ☐ FAIL				
Validation cycle	QA assessment: $PM_{2.5}$				QC procedure: $PM_{2.5}$: /			
Passing criteria	± [15] % or ± [5] μg/m³				± [15] % or ± [5] μg/m³			
TS Average [μg/m³]	Reading [μg/m³]	Error [μg/m³]	Error [%]	Result	Reading [μg/m³]	Error [μg/m³]	Error [%]	Result
$PM_{2.5}$-0 μg/m³	0	0	/	☑ PASS ☐ FAIL	/	/	/	☐ PASS ☐ FAIL
*$PM_{2.5}$- 93.3μg/m³	94.7	1.4	1.50	☑ PASS ☐ FAIL				
$PM_{2.5}$-152.3μg/m³	152.3	0.0	0.00	☑ PASS ☐ FAIL				
Validation cycle	QA assessment: PM_{10}				QC procedure: PM_{10}: /			
Passing criteria	± [15] % or ± [5] μg/m³				± [15] % or ± [5] μg/m³			
TS Average [μg/m³]	Reading [μg/m³]	Error [μg/m³]	Error [%]	Result	Reading [μg/m³]	Error [μg/m³]	Error [%]	Result
PM_{10}-0 μg/m³	0	0	/	☑ PASS ☐ FAIL	/	/	/	☐ PASS ☐ FAIL
*PM_{10}- 157.0μg/m³	150.0	-7.0	-4.46	☑ PASS ☐ FAIL				

PM_{10}-243.4μg/m³	243.5	0.1	0.04	☑ PASS ☐ FAIL				

Note: 1. For PM validation, the reading of transfer standard (TS) will be used as reference. TS Average sourced from MAS-AF300 (No.9255C240300008). 2. Normally step 2 (*) is not required for QA checking.

3.3. Weather Station Validation Data

No.9245G240300005 (SAP-G2W3)			
Parameters	Sensor Average	Error	Result
Temperature ± 1℃	TS Average=30.5℃		
	31.3℃	0.8℃	☑ PASS ☐ FAIL
Humidity ± 3% RH	TS Average=83.5% RH		
	86.3% RH	2.8% RH	☑ PASS ☐ FAIL
Pressure ±1 hPa	TS Average=1008.3 hPa		
	1008.7 hPa	0.4 hPa	☑ PASS ☐ FAIL

Note: For weather station validation, the reading of transfer standard (TS) will be used as reference. TS Average sourced from MAS-AF300 (No.9255C240300008).

3.4. Validation Result Summary

No. 9225A240300035 (SAP-G1W0)				
NO	**NO_2**			
☑ PASS	☑ PASS			
PM_1	**$PM_{2.5}$**	**PM_{10}**		
☑ PASS	☑ PASS	☑ PASS		

No. 9245G240300005 (SAP-G2W3)				
NO	**NO_2**	**CO**	**CO_2**	
☑ PASS	☑ PASS	☑ PASS	☑ PASS	
PM_1	**$PM_{2.5}$**	**PM_{10}**		
☑ PASS	☑ PASS	☑ PASS		
Temperature	**Humidity**	**Pressure**		
☑ PASS	☑ PASS	☑ PASS		

3.5. Conclusion

The report approves that each calibrated item of the product meets its technical specifications.

Prepared by:	王亨业	**Approved by:**	陈桂彬	**Endorsed by:**	王志勇

Validation Results Details of Plenum 2

1. AMS before ESP

1.1. Gas validation Data

No.9225A240300005 (SAP-G1W0)								
Validation cycle	QA assessment: NO: 0 ppb, 400 ppb and 800 ppb				QC procedure: NO: 400 ppb			
Passing criteria	± [5] % or ± [5] ppb				± [5] % or ± [5] ppb			
Steps	Reading [ppb]	Error [ppb]	Error [%]	Result	Reading [ppb]	Error [ppb]	Error [%]	Result
NO-0 ppb	1.0	1.0	/	☑ PASS ☐ FAIL	/	/	/	☐ PASS ☐ FAIL
*NO-400 ppb	413.0	13.0	3.25	☑ PASS ☐ FAIL				
NO-800 ppb	797.0	-3.0	-0.38	☑ PASS ☐ FAIL				
Validation cycle	QA assessment: NO_2: 0 ppb, 100 ppb and 200 ppb				QC procedure: NO_2: 100 ppb			
Passing criteria	± [5] % or ± [5] ppb				± [5] % or ± [5] ppb			
Steps	Reading [ppb]	Error [ppb]	Error [%]	Result	Reading [ppb]	Error [ppb]	Error [%]	Result
NO_2-0 ppb	1.0	1.0	/	☑ PASS ☐ FAIL	/	/	/	☐ PASS ☐ FAIL
*NO_2-100 ppb	101.0	1.0	1.00	☑ PASS ☐ FAIL				
NO_2-200 ppb	200.0	0.0	0.00	☑ PASS ☐ FAIL				

Note: Normally step 2 (*) is not required for QA checking.

No.9255C240300025 (SAP-G3W5)								
Validation cycle	QA assessment: NO: 0 ppb, 400 ppb and 800 ppb				QC procedure: NO: 400 ppb			
Passing criteria	± [5] % or ± [5] ppb				± [5] % or ± [5] ppb			
Steps	Reading [ppb]	Error [ppb]	Error [%]	Result	Reading [ppb]	Error [ppb]	Error [%]	Result
NO-0 ppb	1.0	1.0	/	☑ PASS ☐ FAIL	/	/	/	☐ PASS ☐ FAIL
*NO-400 ppb	404.6	4.6	1.15	☑ PASS ☐ FAIL				
NO-800 ppb	777.5	-22.5	-2.81	☑ PASS ☐ FAIL				
Validation cycle	QA assessment: NO_2: 0 ppb, 100 ppb and 200 ppb				QC procedure: NO_2: 100 ppb			
Passing criteria	± [5] % or ± [5] ppb				± [5] % or ± [5] ppb			
Steps	Reading [ppb]	Error [ppb]	Error [%]	Result	Reading [ppb]	Error [ppb]	Error [%]	Result
NO_2-0 ppb	1.0	1.0	/	☑ PASS ☐ FAIL	/	/	/	☐ PASS ☐ FAIL
*NO_2-100 ppb	99.3	-0.7	-0.70	☑ PASS ☐ FAIL				
NO_2-200 ppb	204.5	4.5	2.25	☑ PASS ☐ FAIL				
Validation cycle	QA assessment: CO: 1 ppm, 2.5 ppm and 5 ppm				QC procedure: CO: 2.5 ppm			
Passing criteria	± [5] %				± [5] %			
Steps	Reading [ppm]	Error [ppm]	Error [%]	Result	Reading [ppm]	Error [ppm]	Error [%]	Result
CO-1 ppm	0.99	-0.01	-1.00	☑ PASS ☐ FAIL	/	/	/	☐ PASS ☐ FAIL
*CO-2.5 ppm	2.48	-0.02	-0.80	☑ PASS ☐ FAIL				
CO-5 ppm	5.15	0.15	3.00	☑ PASS ☐ FAIL				
Validation cycle	QA assessment:CO_2: 1000 ppm, 2500 ppm and 5000 ppm				QC procedure: CO_2: 2500 ppm			
Passing criteria	± [5] %				± [5] %			
Steps	Reading [ppm]	Error [ppm]	Error [%]	Result	Reading [ppm]	Error [ppm]	Error [%]	Result
CO_2-1000 ppm	1027.16	27.16	2.72	☑ PASS ☐ FAIL	/	/	/	☐ PASS

*CO_2-2500 ppm	2494.57	-5.43	-0.22	☑ PASS ☐ FAIL				☐ FAIL
CO_2-5000 ppm	4858.10	-141.90	-2.84	☑ PASS ☐ FAIL				
Validation cycle	QA assessment: O_3: 0 ppb, 100 ppb and 200 ppb				QC procedure: O_3: 100 ppb			
Passing criteria	± [5] % or ± [5] ppb				± [5] % or ± [5] ppb			
Steps	Reading [ppb]	Error [ppb]	Error [%]	Result	Reading [ppb]	Error [ppb]	Error [%]	Result
O_3-0 ppb	1.0	1.0	/	☑ PASS ☐ FAIL	/	/	/	☐ PASS ☐ FAIL
*O_3-100 ppb	98.4	-1.6	-1.60	☑ PASS ☐ FAIL				
O_3-200 ppb	208.2	8.2	4.10	☑ PASS ☐ FAIL				

Note: Normally step 2 (*) is not required for QA checking.

1.2. PM validation Data

No.9225A240300005 (SAP-G1W0)								
Validation cycle	QA assessment: PM_1				QC procedure: PM_1: /			
Passing criteria	± [15] % or ± [5] μg/m³				± [15] % or ± [5] μg/m³			
TS Average [μg/m³]	Reading [μg/m³]	Error [μg/m³]	Error [%]	Result	Reading [μg/m³]	Error [μg/m³]	Error [%]	Result
PM_1-0 μg/m³	0	0	/	☑ PASS ☐ FAIL	/	/	/	☐ PASS ☐ FAIL
*PM_1-60.9μg/m³	64.6	3.7	6.08	☑ PASS ☐ FAIL				
PM_1-90.8μg/m³	94.3	3.5	3.85	☑ PASS ☐ FAIL				
Validation cycle	QA assessment: $PM_{2.5}$				QC procedure: $PM_{2.5}$: /			
Passing criteria	± [15] % or ± [5] μg/m³				± [15] % or ± [5] μg/m³			
TS Average [μg/m³]	Reading [μg/m³]	Error [μg/m³]	Error [%]	Result	Reading [μg/m³]	Error [μg/m³]	Error [%]	Result
$PM_{2.5}$-0 μg/m³	0	0	/	☑ PASS ☐ FAIL	/	/	/	☐ PASS ☐ FAIL
*$PM_{2.5}$-113.6μg/m³	113.1	-0.5	-0.44	☑ PASS ☐ FAIL				
$PM_{2.5}$-171.5μg/m³	176.4	4.9	2.86	☑ PASS ☐ FAIL				
Validation cycle	QA assessment: PM_{10}				QC procedure: PM_{10}: /			
Passing criteria	± [15] % or ± [5] μg/m³				± [15] % or ± [5] μg/m³			
TS Average [μg/m³]	Reading [μg/m³]	Error [μg/m³]	Error [%]	Result	Reading [μg/m³]	Error [μg/m³]	Error [%]	Result
PM_{10}-0 μg/m³	0.4	0.4	/	☑ PASS ☐ FAIL	/	/	/	☐ PASS ☐ FAIL
*PM_{10}-181.8μg/m³	188.7	6.9	3.80	☑ PASS ☐ FAIL				
PM_{10}- 293.8μg/m³	296.6	2.8	0.95	☑ PASS ☐ FAIL				

Note: 1. For PM validation, the reading of transfer standard (TS) will be used as reference. TS Average sourced from MAS-AF300 (No.9255C240100002). 2. Normally step 2 (*) is not required for QA checking.

No.9255C240300025 (SAP-G3W5)								
Validation cycle	QA assessment: PM_1				QC procedure: PM_1: /			
Passing criteria	± [15] % or ± [5] μg/m³				± [15] % or ± [5] μg/m³			
TS Average [μg/m³]	Reading [μg/m³]	Error [μg/m³]	Error [%]	Result	Reading [μg/m³]	Error [μg/m³]	Error [%]	Result
PM_1-0 μg/m³	0	0	/	☑ PASS ☐ FAIL	/	/	/	☐ PASS ☐ FAIL
*PM_1-51.7μg/m³	57.2	5.5	10.64	☑ PASS ☐ FAIL				
PM_1-100.3μg/m³	114.9	14.6	14.56	☑ PASS ☐ FAIL				
Validation cycle	QA assessment: $PM_{2.5}$				QC procedure: $PM_{2.5}$: /			
Passing criteria	± [15] % or ± [5] μg/m³				± [15] % or ± [5] μg/m³			
TS Average	Reading	Error	Error	Result	Reading	Error	Error	Result

[μg/m³]	[μg/m³]	[μg/m³]	[%]		[μg/m³]	[μg/m³]	[%]	
$PM_{2.5}$-0 μg/m³	0	0	/	☑ PASS ☐ FAIL	/	/	/	☐ PASS ☐ FAIL
*$PM_{2.5}$-89.3μg/m³	95.2	5.9	6.61	☑ PASS ☐ FAIL				
$PM_{2.5}$-204.0μg/m³	195.2	-8.8	-4.31	☑ PASS ☐ FAIL				
Validation cycle	QA assessment: PM_{10}				QC procedure: PM_{10}: /			
Passing criteria	± [15] % or ± [5] μg/m³				± [15] % or ± [5] μg/m³			
TS Average [μg/m³]	Reading [μg/m³]	Error [μg/m³]	Error [%]	Result	Reading [μg/m³]	Error [μg/m³]	Error [%]	Result
PM_{10}-0 μg/m³	0	0	/	☑ PASS ☐ FAIL	/	/	/	☐ PASS ☐ FAIL
*PM_{10}-139.2μg/m³	155.6	16.4	11.78	☑ PASS ☐ FAIL				
PM_{10}-334.5μg/m³	362.4	27.9	8.34	☑ PASS ☐ FAIL				

Note: 1. For PM validation, the reading of transfer standard (TS) will be used as reference. TS Average sourced from MAS-AF300 (No.9255C240100002). 2. Normally step 2 (*) is not required for QA checking.

1.3. Weather Station Validation Data

The SBS method for weather station validation requires the setup of calibrated TS side by side with MAS-AF300, and operation of the MAS and reference analysers as data source input for validation in this project.

No.9255C240300025 (SAP-G3W5)			
Parameters	Sensor Average	Error	Result
Temperature ± 1℃	TS Average=29.5°C		
	28.6°C	-0.9°C	☑ PASS ☐ FAIL
Humidity ± 3% RH	TS Average=85.3% RH		
	87.6% RH	2.3% RH	☑ PASS ☐ FAIL
Pressure ±1 hPa	TS Average=1010.8 hPa		
	1010.3 hPa	-0.5 hPa	☑ PASS ☐ FAIL

Note: For weather station validation, the reading of transfer standard (TS) will be used as reference. TS Average sourced from MAS-AF300 (No.9255C240100002).

1.4. Validation Result Summary

No. 9225A240300005 (SAP-G1W0)				
NO	**NO_2**			
☑ PASS	☑ PASS			
PM_1	**$PM_{2.5}$**	**PM_{10}**		
☑ PASS	☑ PASS	☑ PASS		

No. 9255C240300025 (SAP-G3W5)				
NO	**NO_2**	**CO**	**CO_2**	**O_3**
☑ PASS	☑ PASS	☑ PASS	☑ PASS	☑ PASS
PM_1	**$PM_{2.5}$**	**PM_{10}**		
☑ PASS	☑ PASS	☑ PASS		
Temperature	**Humidity**	**Pressure**		
☑ PASS	☑ PASS	☑ PASS		

1.5. Conclusion

The report approves that each calibrated item of the product meets its technical specifications.

Prepared by:		Approved by:		Endorsed by:	

3. AMS after DE-NO2 filter

3.1. Gas validation Data

No.9225A240300012 (SAP-G1W0)								
Validation cycle	QA assessment: NO: 0 ppb, 400 ppb and 800 ppb				QC procedure: NO: 400 ppb			
Passing criteria	± [5] % or ± [5] ppb				± [5] % or ± [5] ppb			
Steps	Reading [ppb]	Error [ppb]	Error [%]	Result	Reading [ppb]	Error [ppb]	Error [%]	Result
NO-0 ppb	1.0	1.0	/	☑ PASS ☐ FAIL	/	/	/	☐ PASS ☐ FAIL
*NO-400 ppb	406.1	6.1	1.53	☑ PASS ☐ FAIL				
NO-800 ppb	802.8	2.8	0.35	☑ PASS ☐ FAIL				
Validation cycle	QA assessment: NO_2: 0 ppb, 100 ppb and 200 ppb				QC procedure: NO_2: 100 ppb			
Passing criteria	± [5] % or ± [5] ppb				± [5] % or ± [5] ppb			
Steps	Reading [ppb]	Error [ppb]	Error [%]	Result	Reading [ppb]	Error [ppb]	Error [%]	Result
NO_2-0 ppb	1.0	1.0	/	☑ PASS ☐ FAIL	/	/	/	☐ PASS ☐ FAIL
*NO_2-100 ppb	98.8	-1.2	-1.20	☑ PASS ☐ FAIL				
NO_2-200 ppb	207.6	7.6	3.80	☑ PASS ☐ FAIL				

Note: Normally step 2 (*) is not required for QA checking.

No.9245G240300014 (SAP-G2W3)								
Validation cycle	QA assessment: NO: 0 ppb, 400 ppb and 800 ppb				QC procedure: NO: 400 ppb			
Passing criteria	± [5] % or ± [5] ppb				± [5] % or ± [5] ppb			
Steps	Reading [ppb]	Error [ppb]	Error [%]	Result	Reading [ppb]	Error [ppb]	Error [%]	Result
NO-0 ppb	1.0	1.0	/	☑ PASS ☐ FAIL	/	/	/	☐ PASS ☐ FAIL
*NO-400 ppb	404.4	4.4	1.10	☑ PASS ☐ FAIL				
NO-800 ppb	797.2	-2.8	-0.35	☑ PASS ☐ FAIL				
Validation cycle	QA assessment: NO_2: 0 ppb, 100 ppb and 200 ppb				QC procedure: NO_2: 100 ppb			
Passing criteria	± [5] % or ± [5] ppb				± [5] % or ± [5] ppb			
Steps	Reading [ppb]	Error [ppb]	Error [%]	Result	Reading [ppb]	Error [ppb]	Error [%]	Result
NO_2-0 ppb	1.0	1.0	/	☑ PASS ☐ FAIL	/	/	/	☐ PASS ☐ FAIL
*NO_2-100 ppb	99.0	-1.0	-1.00	☑ PASS ☐ FAIL				
NO_2-200 ppb	205.4	5.4	2.70	☑ PASS ☐ FAIL				
Validation cycle	QA assessment: CO: 1 ppm, 2.5 ppm and 5 ppm				QC procedure: CO: 2.5 ppm			
Passing criteria	± [5] %				± [5] %			
Steps	Reading [ppm]	Error [ppm]	Error [%]	Result	Reading [ppm]	Error [ppm]	Error [%]	Result
CO-1 ppm	1.00	0.00	0.00	☑ PASS ☐ FAIL	/	/	/	☐ PASS ☐ FAIL
*CO-2.5 ppm	2.44	-0.06	-2.40	☑ PASS ☐ FAIL				
CO-5 ppm	5.02	0.02	0.40	☑ PASS ☐ FAIL				
Validation cycle	QA assessment:CO_2: 1000 ppm, 2500 ppm and 5000 ppm				QC procedure: CO_2: 2500 ppm			
Passing criteria	± [5] %				± [5] %			
Steps	Reading [ppm]	Error [ppm]	Error [%]	Result	Reading [ppm]	Error [ppm]	Error [%]	Result
CO_2-1000 ppm	982.58	-17.42	-1.74	☑ PASS ☐ FAIL	/	/	/	☐ PASS ☐ FAIL
*CO_2-2500 ppm	2549.74	49.74	1.99	☑ PASS ☐ FAIL				

CO_2-5000 ppm	4778.44	-221.56	-4.43	☑ PASS ☐ FAIL				

Note: Normally step 2 (*) is not required for QA checking.

3.2. PM validation Data

No.9225A240300012 (SAP-G1W0)								
Validation cycle	QA assessment: PM_1				QC procedure: PM_1: /			
Passing criteria	± [15] % or ± [5] μg/m³				± [15] % or ± [5] μg/m³			
TS Average [μg/m³]	Reading [μg/m³]	Error [μg/m³]	Error [%]	Result	Reading [μg/m³]	Error [μg/m³]	Error [%]	Result
PM_1-0 μg/m³	0	0	/	☑ PASS ☐ FAIL	/	/	/	☐ PASS ☐ FAIL
*PM_1-54.8μg/m³	53.2	-1.6	-2.92	☑ PASS ☐ FAIL				
PM_1-100.6μg/m³	106.4	5.8	5.77	☑ PASS ☐ FAIL				
Validation cycle	QA assessment: $PM_{2.5}$				QC procedure: $PM_{2.5}$: /			
Passing criteria	± [15] % or ± [5] μg/m³				± [15] % or ± [5] μg/m³			
TS Average [μg/m³]	Reading [μg/m³]	Error [μg/m³]	Error [%]	Result	Reading [μg/m³]	Error [μg/m³]	Error [%]	Result
$PM_{2.5}$-0 μg/m³	0.8	0.8	/	☑ PASS ☐ FAIL	/	/	/	☐ PASS ☐ FAIL
*$PM_{2.5}$-85.6μg/m³	95.9	10.3	12.03	☑ PASS ☐ FAIL				
$PM_{2.5}$-172.2μg/m³	191.4	19.2	11.15	☑ PASS ☐ FAIL				
Validation cycle	QA assessment: PM_{10}				QC procedure: PM_{10}: /			
Passing criteria	± [15] % or ± [5] μg/m³				± [15] % or ± [5] μg/m³			
TS Average [μg/m³]	Reading [μg/m³]	Error [μg/m³]	Error [%]	Result	Reading [μg/m³]	Error [μg/m³]	Error [%]	Result
PM_{10}-0 μg/m³	0.9	0.9	/	☑ PASS ☐ FAIL	/	/	/	☐ PASS ☐ FAIL
*PM_{10}-125.7μg/m³	141.3	15.6	12.41	☑ PASS ☐ FAIL				
PM_{10}- 244.4μg/m³	278.8	34.4	14.08	☑ PASS ☐ FAIL				

Note: 1. For PM validation, the reading of transfer standard (TS) will be used as reference. TS Average sourced from MAS-AF300 (No.9255C240300008). 2. Normally step 2 (*) is not required for QA checking.

No.9245G240300014 (SAP-G2W3)								
Validation cycle	QA assessment: PM_1				QC procedure: PM_1: /			
Passing criteria	± [15] % or ± [5] μg/m³				± [15] % or ± [5] μg/m³			
TS Average [μg/m³]	Reading [μg/m³]	Error [μg/m³]	Error [%]	Result	Reading [μg/m³]	Error [μg/m³]	Error [%]	Result
PM_1-0 μg/m³	0	0	/	☑ PASS ☐ FAIL	/	/	/	☐ PASS ☐ FAIL
*PM_1-61.1μg/m³	58.4	-2.7	-4.42	☑ PASS ☐ FAIL				
PM_1-101.1μg/m³	105.9	4.8	4.75	☑ PASS ☐ FAIL				
Validation cycle	QA assessment: $PM_{2.5}$				QC procedure: $PM_{2.5}$: /			
Passing criteria	± [15] % or ± [5] μg/m³				± [15] % or ± [5] μg/m³			
TS Average [μg/m³]	Reading [μg/m³]	Error [μg/m³]	Error [%]	Result	Reading [μg/m³]	Error [μg/m³]	Error [%]	Result
$PM_{2.5}$-0 μg/m³	0	0	/	☑ PASS ☐ FAIL	/	/	/	☐ PASS ☐ FAIL
*$PM_{2.5}$-96.1μg/m³	108.7	12.6	13.11	☑ PASS ☐ FAIL				
$PM_{2.5}$-173.9μg/m³	196.5	22.6	13.00	☑ PASS ☐ FAIL				
Validation cycle	QA assessment: PM_{10}				QC procedure: PM_{10}: /			
Passing criteria	± [15] % or ± [5] μg/m³				± [15] % or ± [5] μg/m³			
TS Average [μg/m³]	Reading [μg/m³]	Error [μg/m³]	Error [%]	Result	Reading [μg/m³]	Error [μg/m³]	Error [%]	Result

PM_{10}-0 μg/m³	0	0	/	☑ PASS ☐ FAIL	/	/	/	☐ PASS ☐ FAIL
*PM_{10}-138.9μg/m³	155.8	16.9	12.17	☑ PASS ☐ FAIL				
PM_{10}-253.9μg/m³	286.5	32.6	12.84	☑ PASS ☐ FAIL				

Note: 1. For PM validation, the reading of transfer standard (TS) will be used as reference. TS Average sourced from MAS-AF300 (No.9255C240300008). 2. Normally step 2 (*) is not required for QA checking.

3.3. Weather Station Validation Data

The SBS method for weather station validation requires the setup of calibrated TS side by side with MAS-AF300, and operation of the MAS and reference analysers as data source input for validation in this project.

No.9245G240300014 (SAP-G2W3)			
Parameters	Sensor Average	Error	Result
Temperature ± 1℃	TS Average=30.6℃		
	31.0℃	0.4℃	☑ PASS ☐ FAIL
Humidity ± 3% RH	TS Average=75.9% RH		
	73.1% RH	-2.8% RH	☑ PASS ☐ FAIL
Pressure ±1 hPa	TS Average=1010.7 hPa		
	1010.5 hPa	-0.2 hPa	☑ PASS ☐ FAIL

Note: For weather station validation, the reading of transfer standard (TS) will be used as reference. TS Average sourced from MAS-AF300 (No.9255C240300008).

3.4. Validation Result Summary

No. 9225A240300012 (SAP-G1W0)				
NO	**NO_2**			
☑ PASS	☑ PASS			
PM_1	**$PM_{2.5}$**	**PM_{10}**		
☑ PASS	☑ PASS	☑ PASS		

No. 9245G240300014 (SAP-G2W3)				
NO	**NO_2**	**CO**	**CO_2**	
☑ PASS	☑ PASS	☑ PASS	☑ PASS	
PM_1	**$PM_{2.5}$**	**PM_{10}**		
☑ PASS	☑ PASS	☑ PASS		
Temperature	**Humidity**	**Pressure**		
☑ PASS	☑ PASS	☑ PASS		

3.5. Conclusion

The report approves that each calibrated item of the product meets its technical specifications.

Prepared by:	王等	Approved by:	钟[illegible]	Endorsed by:	王志勇

Validation Results Details of Plenum 3

1. AMS before ESP

1.1. Gas validation Data

No.9225A240300014 (SAP-G1W0)								
Validation cycle	QA assessment: NO: 0 ppb, 400 ppb and 800 ppb				QC procedure: NO: 400 ppb			
Passing criteria	± [5] % or ± [5] ppb				± [5] % or ± [5] ppb			
Steps	Reading [ppb]	Error [ppb]	Error [%]	Result	Reading [ppb]	Error [ppb]	Error [%]	Result
NO-0 ppb	1.0	1.0	/	☑ PASS ☐ FAIL	/	/	/	☐ PASS ☐ FAIL
*NO-400 ppb	414.1	14.1	3.53	☑ PASS ☐ FAIL				
NO-800 ppb	784.1	-15.9	-1.99	☑ PASS ☐ FAIL				
Validation cycle	QA assessment: NO_2: 0 ppb, 100ppb and 200 ppb				QC procedure: NO_2: 100 ppb			
Passing criteria	± [5] % or ± [5] ppb				± [5] % or ± [5] ppb			
Steps	Reading [ppb]	Error [ppb]	Error [%]	Result	Reading [ppb]	Error [ppb]	Error [%]	Result
NO_2-0 ppb	1.0	1.0	/	☑ PASS ☐ FAIL	/	/	/	☐ PASS ☐ FAIL
*NO_2-100 ppb	101.1	1.1	1.10	☑ PASS ☐ FAIL				
NO_2-200 ppb	208.3	8.3	4.15	☑ PASS ☐ FAIL				

Note: Normally step 2 (*) is not required for QA checking.

No.9255C240300013 (SAP-G3W5)								
Validation cycle	QA assessment: NO: 0 ppb, 400 ppb and 800 ppb				QC procedure: NO: 400 ppb			
Passing criteria	± [5] % or ± [5] ppb				± [5] % or ± [5] ppb			
Steps	Reading [ppb]	Error [ppb]	Error [%]	Result	Reading [ppb]	Error [ppb]	Error [%]	Result
NO-0 ppb	1.0	1.0	/	☑ PASS ☐ FAIL	/	/	/	☐ PASS ☐ FAIL
*NO-400 ppb	408.8	8.8	2.20	☑ PASS ☐ FAIL				
NO-800 ppb	786.1	-13.9	-1.74	☑ PASS ☐ FAIL				
Validation cycle	QA assessment: NO_2: 0 ppb, 100 ppb, 100 ppb and 200 ppb				QC procedure: NO_2: 100 ppb			
Passing criteria	± [5] % or ± [5] ppb				± [5] % or ± [5] ppb			
Steps	Reading [ppb]	Error [ppb]	Error [%]	Result	Reading [ppb]	Error [ppb]	Error [%]	Result
NO_2-0 ppb	1.0	1.0	/	☑ PASS ☐ FAIL	/	/	/	☐ PASS ☐ FAIL
*NO_2-100 ppb	102.1	2.1	2.10	☑ PASS ☐ FAIL				
NO_2-200 ppb	208.3	8.3	4.15	☑ PASS ☐ FAIL				
Validation cycle	QA assessment: CO: 1 ppm, 2.5 ppm and 5 ppm				QC procedure: CO: 2.5 ppm			
Passing criteria	± [5] %				± [5] %			
Steps	Reading [ppm]	Error [ppm]	Error [%]	Result	Reading [ppm]	Error [ppm]	Error [%]	Result
CO-1 ppm	0.99	-0.01	-1.00	☑ PASS ☐ FAIL	/	/	/	☐ PASS ☐ FAIL
*CO-2.5 ppm	2.44	-0.06	-2.40	☑ PASS ☐ FAIL				
CO-5 ppm	5.03	0.03	0.60	☑ PASS ☐ FAIL				
Validation cycle	QA assessment: CO_2: 1000 ppm, 2500 ppm and 5000 ppm				QC procedure: CO_2: 2500 ppm			
Passing criteria	± [5] %				± [5] %			
Steps	Reading [ppm]	Error [ppm]	Error [%]	Result	Reading [ppm]	Error [ppm]	Error [%]	Result
CO_2-1000 ppm	1028.75	28.75	2.88	☑ PASS ☐ FAIL	/	/	/	☐ PASS ☐ FAIL
*CO_2-2500 ppm	2482.73	-17.27	-0.69	☑ PASS ☐ FAIL				

CO_2-5000 ppm	5023.5	23.5	0.47	☑ PASS ☐ FAIL				
Validation cycle	QA assessment: O_3: 0 ppb, 100 ppb, 100 ppb and 200 ppb				QC procedure: O_3: 100 ppb			
Passing criteria	± [5] % or ± [5] ppb				± [5] % or ± [5] ppb			
Steps	Reading [ppb]	Error [ppb]	Error [%]	Result	Reading [ppb]	Error [ppb]	Error [%]	Result
O_3-0 ppb	1.0	1.0	/	☑ PASS ☐ FAIL	/	/	/	☐ PASS ☐ FAIL
*O_3-100 ppb	97.3	-2.7	-2.70	☑ PASS ☐ FAIL				
O_3-200 ppb	192.1	-7.9	-3.95	☑ PASS ☐ FAIL				

Note: Normally step 2 (*) is not required for QA checking.

1.2. PM validation Data

No.9225A240300014 (SAP-G1W0)								
Validation cycle	QA assessment: PM_1				QC procedure: PM_1: /			
Passing criteria	± [15] % or ± [5] μg/m³				± [15] % or ± [5] μg/m³			
TS Average [μg/m³]	Reading [μg/m³]	Error [μg/m³]	Error [%]	Result	Reading [μg/m³]	Error [μg/m³]	Error [%]	Result
PM_1-0 μg/m³	0	0	/	☑ PASS ☐ FAIL	/	/	/	☐ PASS ☐ FAIL
*PM_1-30.3μg/m³	27.0	-3.3	-10.89	☑ PASS ☐ FAIL				
PM_1-97.2μg/m³	92.9	-4.3	-4.42	☑ PASS ☐ FAIL				
Validation cycle	QA assessment: $PM_{2.5}$				QC procedure: $PM_{2.5}$: /			
Passing criteria	± [15] % or ± [5] μg/m³				± [15] % or ± [5] μg/m³			
TS Average [μg/m³]	Reading [μg/m³]	Error [μg/m³]	Error [%]	Result	Reading [μg/m³]	Error [μg/m³]	Error [%]	Result
$PM_{2.5}$-0 μg/m³	0	0	/	☑ PASS ☐ FAIL	/	/	/	☐ PASS ☐ FAIL
*$PM_{2.5}$-46.3μg/m³	48.6	2.3	4.97	☑ PASS ☐ FAIL				
$PM_{2.5}$- 193.8μg/m³	213.6	19.8	10.22	☑ PASS ☐ FAIL				
Validation cycle	QA assessment: PM_{10}				QC procedure: PM_{10}: /			
Passing criteria	± [15] % or ± [5] μg/m³				± [15] % or ± [5] μg/m³			
TS Average [μg/m³]	Reading [μg/m³]	Error [μg/m³]	Error [%]	Result	Reading [μg/m³]	Error [μg/m³]	Error [%]	Result
PM_{10}-0 μg/m³	0	0	/	☑ PASS ☐ FAIL	/	/	/	☐ PASS ☐ FAIL
*PM_{10}-103.0μg/m³	110.9	7.9	7.67	☑ PASS ☐ FAIL				
PM_{10}-366.6μg/m³	412.7	46.1	12.58	☑ PASS ☐ FAIL				

Note: 1. For PM validation, the reading of transfer standard (TS) will be used as reference. TS Average sourced from MAS-AF300 (No.9255C240100002). 2. Normally step 2 (*) is not required for QA checking.

No.9255C240300013 (SAP-G3W5)								
Validation cycle	QA assessment: PM_1				QC procedure: PM_1: /			
Passing criteria	± [15] % or ± [5] μg/m³				± [15] % or ± [5] μg/m³			
TS Average [μg/m³]	Reading [μg/m³]	Error [μg/m³]	Error [%]	Result	Reading [μg/m³]	Error [μg/m³]	Error [%]	Result
PM_1-0 μg/m³	0	0	/	☑ PASS ☐ FAIL	/	/	/	☐ PASS ☐ FAIL
*PM_1-35.7μg/m³	39.6	3.9	10.92	☑ PASS ☐ FAIL				
PM_1-100.2μg/m³	103.6	3.4	3.39	☑ PASS ☐ FAIL				
Validation cycle	QA assessment: $PM_{2.5}$				QC procedure: $PM_{2.5}$: /			
Passing criteria	± [15] % or ± [5] μg/m³				± [15] % or ± [5] μg/m³			
TS Average [μg/m³]	Reading [μg/m³]	Error [μg/m³]	Error [%]	Result	Reading [μg/m³]	Error [μg/m³]	Error [%]	Result
$PM_{2.5}$-0 μg/m³	0	0	/	☑ PASS ☐ FAIL	/	/	/	☐ PASS

*$PM_{2.5}$-54.8μg/m³	61.8	7.0	12.77	☑ PASS ☐ FAIL				☐ FAIL
$PM_{2.5}$-200.3μg/m³	211.3	11.0	5.49	☑ PASS ☐ FAIL				
Validation cycle	QA assessment: PM_{10}				QC procedure: PM_{10}: /			
Passing criteria	± [15] % or ± [5] μg/m³				± [15] % or ± [5] μg/m³			
TS Average [μg/m³]	Reading [μg/m³]	Error [μg/m³]	Error [%]	Result	Reading [μg/m³]	Error [μg/m³]	Error [%]	Result
PM_{10}-0 μg/m³	0	0	/	☑ PASS ☐ FAIL	/	/	/	☐ PASS ☐ FAIL
*PM_{10}-113.6μg/m³	122.2	8.6	7.57	☑ PASS ☐ FAIL				
PM_{10}-377.7μg/m³	417	39.3	10.41	☑ PASS ☐ FAIL				

Note: 1. For PM validation, the reading of transfer standard (TS) will be used as reference. TS Average sourced from MAS-AF300 (No.9255C240100002). 2. Normally step 2 (*) is not required for QA checking.

1.3. Weather Station Validation Data

The SBS method for weather station validation requires the setup of calibrated TS side by side with MAS-AF300, and operation of the MAS and reference analysers as data source input for validation in this project.

No.9255C240300013 (SAP-G3W5)			
Parameters	Sensor Average	Error	Result
Temperature ± 1℃	TS Average=28.4℃		
	28.1℃	-0.3℃	☑ PASS ☐ FAIL
Humidity ± 3% RH	TS Average=77.5% RH		
	76.8% RH	-0.7% RH	☑ PASS ☐ FAIL
Pressure ±1 hPa	TS Average=1007.1 hPa		
	1007.6 hPa	0.5 hPa	☑ PASS ☐ FAIL

Note: For weather station validation, the reading of transfer standard (TS) will be used as reference. TS Average sourced from MAS-AF300 (No.9255C240100002).

1.4. Validation Result Summary

No. 9225A240300014 (SAP-G1W0)				
NO	**NO_2**			
☑ PASS	☑ PASS			
PM_1	**$PM_{2.5}$**	**PM_{10}**		
☑ PASS	☑ PASS	☑ PASS		

No. 9255C240300013 (SAP-G3W5)				
NO	**NO_2**	**CO**	**CO_2**	**O_3**
☑ PASS	☑ PASS	☑ PASS	☑ PASS	☑ PASS
PM_1	**$PM_{2.5}$**	**PM_{10}**		
☑ PASS	☑ PASS	☑ PASS		
Temperature	**Humidity**	**Pressure**		
☑ PASS	☑ PASS	☑ PASS		

1.5. Conclusion

The report approves that each calibrated item of the product meets its technical specifications.

Prepared by:		Approved by:		Endorsed by:	

3. AMS after DE-NO2 filter

3.1. Gas validation Data

No.9225A240300015 (SAP-G1W0)								
Validation cycle	QA assessment: NO: 0 ppb, 400 ppb and 800 ppb				QC procedure: NO: 400 ppb			
Passing criteria	± [5] % or ± [5] ppb				± [5] % or ± [5] ppb			
Steps	Reading [ppb]	Error [ppb]	Error [%]	Result	Reading [ppb]	Error [ppb]	Error [%]	Result
NO-0 ppb	1.0	1.0	/	☑ PASS ☐ FAIL	/	/	/	☐ PASS ☐ FAIL
*NO-400 ppb	399.6	-0.4	-0.10	☑ PASS ☐ FAIL				
NO-800 ppb	806.1	6.1	0.76	☑ PASS ☐ FAIL				
Validation cycle	QA assessment: NO_2: 0 ppb, 100 ppb and 200 ppb				QC procedure: NO_2: 100 ppb			
Passing criteria	± [5] % or ± [5] ppb				± [5] % or ± [5] ppb			
Steps	Reading [ppb]	Error [ppb]	Error [%]	Result	Reading [ppb]	Error [ppb]	Error [%]	Result
NO_2-0 ppb	1.0	1.0	/	☑ PASS ☐ FAIL	/	/	/	☐ PASS ☐ FAIL
*NO_2-100 ppb	101.9	1.9	1.90	☑ PASS ☐ FAIL				
NO_2-200 ppb	205.7	5.7	2.85	☑ PASS ☐ FAIL				

Note: Normally step 2 (*) is not required for QA checking.

No.9245G240300013 (SAP-G2W3)								
Validation cycle	QA assessment: NO: 0 ppb, 400 ppb and 800 ppb				QC procedure: NO: 400 ppb			
Passing criteria	± [5] % or ± [5] ppb				± [5] % or ± [5] ppb			
Steps	Reading [ppb]	Error [ppb]	Error [%]	Result	Reading [ppb]	Error [ppb]	Error [%]	Result
NO-0 ppb	1.0	1.0	/	☑ PASS ☐ FAIL	/	/	/	☐ PASS ☐ FAIL
*NO-400 ppb	408.4	8.4	2.10	☑ PASS ☐ FAIL				
NO-800 ppb	791.7	-8.3	-1.04	☑ PASS ☐ FAIL				
Validation cycle	QA assessment: NO_2: 0 ppb, 100 ppb and 200 ppb				QC procedure: NO_2: 100 ppb			
Passing criteria	± [5] % or ± [5] ppb				± [5] % or ± [5] ppb			
Steps	Reading [ppb]	Error [ppb]	Error [%]	Result	Reading [ppb]	Error [ppb]	Error [%]	Result
NO_2-0 ppb	1.0	1.0	/	☑ PASS ☐ FAIL	/	/	/	☐ PASS ☐ FAIL
*NO_2-100 ppb	102.9	2.9	2.90	☑ PASS ☐ FAIL				
NO_2-200 ppb	200.5	0.5	0.25	☑ PASS ☐ FAIL				
Validation cycle	QA assessment: CO: 1 ppm, 2.5 ppm and 5 ppm				QC procedure: CO: 2.5 ppm			
Passing criteria	± [5] %				± [5] %			
Steps	Reading [ppm]	Error [ppm]	Error [%]	Result	Reading [ppm]	Error [ppm]	Error [%]	Result
CO-1 ppm	1.03	0.03	3.00	☑ PASS ☐ FAIL	/	/	/	☐ PASS ☐ FAIL
*CO-2.5 ppm	2.50	0.00	0.00	☑ PASS ☐ FAIL				
CO-5 ppm	5.00	0.00	0.00	☑ PASS ☐ FAIL				
Validation cycle	QA assessment:CO_2: 1000 ppm, 2500 ppm and 5000 ppm				QC procedure: CO_2: 2500 ppm			
Passing criteria	± [5] %				± [5] %			
Steps	Reading [ppm]	Error [ppm]	Error [%]	Result	Reading [ppm]	Error [ppm]	Error [%]	Result
CO_2-1000 ppm	979	-21	-2.10	☑ PASS ☐ FAIL	/	/	/	☐ PASS ☐ FAIL
*CO_2-2500 ppm	2477.94	-22.06	-0.88	☑ PASS ☐ FAIL				
CO_2-5000 ppm	5001.9	1.9	0.04	☑ PASS ☐ FAIL				

Note: Normally step 2 (*) is not required for QA checking.

3.2. PM validation Data

No.9225A240300015 (SAP-G1W0)								
Validation cycle	QA assessment: PM_1				QC procedure: PM_1: /			
Passing criteria	± [15] % or ± [5] μg/m³				± [15] % or ± [5] μg/m³			
TS Average [μg/m³]	Reading [μg/m³]	Error [μg/m³]	Error [%]	Result	Reading [μg/m³]	Error [μg/m³]	Error [%]	Result
PM_1-0 μg/m³	0	0	/	☑ PASS ☐ FAIL	/	/	/	☐ PASS ☐ FAIL
*PM_1-50.2μg/m³	49.6	-0.6	-1.20	☑ PASS ☐ FAIL				
PM_1-79.8μg/m³	83.5	3.7	4.64	☑ PASS ☐ FAIL				
Validation cycle	QA assessment: $PM_{2.5}$				QC procedure: $PM_{2.5}$: /			
Passing criteria	± [15] % or ± [5] μg/m³				± [15] % or ± [5] μg/m³			
TS Average [μg/m³]	Reading [μg/m³]	Error [μg/m³]	Error [%]	Result	Reading [μg/m³]	Error [μg/m³]	Error [%]	Result
$PM_{2.5}$-0 μg/m³	0.8	0.8	/	☑ PASS ☐ FAIL	/	/	/	☐ PASS ☐ FAIL
*$PM_{2.5}$-87.9μg/m³	92.6	4.7	5.35	☑ PASS ☐ FAIL				
$PM_{2.5}$- 138.8μg/m³	156.3	17.5	12.61	☑ PASS ☐ FAIL				
Validation cycle	QA assessment: PM_{10}				QC procedure: PM_{10}: /			
Passing criteria	± [15] % or ± [5] μg/m³				± [15] % or ± [5] μg/m³			
TS Average [μg/m³]	Reading [μg/m³]	Error [μg/m³]	Error [%]	Result	Reading [μg/m³]	Error [μg/m³]	Error [%]	Result
PM_{10}-0 μg/m³	0.9	0.9	/	☑ PASS ☐ FAIL	/	/	/	☐ PASS ☐ FAIL
*PM_{10}-190.4μg/m³	194.4	4	2.10	☑ PASS ☐ FAIL				
PM_{10}-242.3μg/m³	274.7	32.4	13.37	☑ PASS ☐ FAIL				

Note: 1. For PM validation, the reading of transfer standard (TS) will be used as reference. TS Average sourced from MAS-AF300 (No.9255C240300008). 2. Normally step 2 (*) is not required for QA checking.

No.9245G240300013 (SAP-G2W3)								
Validation cycle	QA assessment: PM_1				QC procedure: PM_1: /			
Passing criteria	± [15] % or ± [5] μg/m³				± [15] % or ± [5] μg/m³			
TS Average [μg/m³]	Reading [μg/m³]	Error [μg/m³]	Error [%]	Result	Reading [μg/m³]	Error [μg/m³]	Error [%]	Result
PM_1-0 μg/m³	0	0	/	☑ PASS ☐ FAIL	/	/	/	☐ PASS ☐ FAIL
*PM_1-48.2μg/m³	45.9	-2.3	-4.77	☑ PASS ☐ FAIL				
PM_1-85.6μg/m³	93.7	8.1	9.46	☑ PASS ☐ FAIL				
Validation cycle	QA assessment: $PM_{2.5}$				QC procedure: $PM_{2.5}$: /			
Passing criteria	± [15] % or ± [5] μg/m³				± [15] % or ± [5] μg/m³			
TS Average [μg/m³]	Reading [μg/m³]	Error [μg/m³]	Error [%]	Result	Reading [μg/m³]	Error [μg/m³]	Error [%]	Result
$PM_{2.5}$-0 μg/m³	0	0	/	☑ PASS ☐ FAIL	/	/	/	☐ PASS ☐ FAIL
*$PM_{2.5}$-80.9μg/m³	76.9	-4	-4.94	☑ PASS ☐ FAIL				
$PM_{2.5}$-148.3μg/m³	131.4	-16.9	-11.40	☑ PASS ☐ FAIL				
Validation cycle	QA assessment: PM_{10}				QC procedure: PM_{10}: /			
Passing criteria	± [15] % or ± [5] μg/m³				± [15] % or ± [5] μg/m³			
TS Average [μg/m³]	Reading [μg/m³]	Error [μg/m³]	Error [%]	Result	Reading [μg/m³]	Error [μg/m³]	Error [%]	Result
PM_{10}-0 μg/m³	0	0	/	☑ PASS ☐ FAIL	/	/	/	☐ PASS

*PM_{10}-159.2μg/m³	137.7	-21.5	-13.51	☑ PASS ☐ FAIL				☐ FAIL
PM_{10}-255.8μg/m³	259.4	3.6	1.41	☑ PASS ☐ FAIL				

Note: 1. For PM validation, the reading of transfer standard (TS) will be used as reference. TS Average sourced from MAS-AF300 (No.9255C240300008). 2. Normally step 2 (*) is not required for QA checking.

3.3. Weather Station Validation Data

The SBS method for weather station validation requires the setup of calibrated TS side by side with MAS-AF300, and operation of the MAS and reference analysers as data source input for validation in this project.

No.9245G240300013 (SAP-G2W3)			
Parameters	Sensor Average	Error	Result
Temperature ± 1℃	TS Average=28.1℃		
	28.6℃	0.5℃	☑ PASS ☐ FAIL
Humidity ± 3% RH	TS Average=77.9% RH		
	78.2% RH	0.3% RH	☑ PASS ☐ FAIL
Pressure ±1 hPa	TS Average=1007.3 hPa		
	1007.7 hPa	0.4 hPa	☑ PASS ☐ FAIL

Note: For weather station validation, the reading of transfer standard (TS) will be used as reference. TS Average sourced from MAS-AF300 (No.9255C240300008).

3.4. Validation Result Summary

No. 9225A240300015 (SAP-G1W0)				
NO	**NO_2**			
☑ PASS	☑ PASS			
PM_1	**$PM_{2.5}$**	**PM_{10}**		
☑ PASS	☑ PASS	☑ PASS		

No. 9245G240300013 (SAP-G2W3)				
NO	**NO_2**	**CO**	**CO_2**	
☑ PASS	☑ PASS	☑ PASS	☑ PASS	
PM_1	**$PM_{2.5}$**	**PM_{10}**		
☑ PASS	☑ PASS	☑ PASS		
Temperature	**Humidity**	**Pressure**		
☑ PASS	☑ PASS	☑ PASS		

3.5. Conclusion

The report approves that each calibrated item of the product meets its technical specifications.

Prepared by:	王家凯	**Approved by:**	蒋康康	**Endorsed by:**	王志勇

Appendix I – Location Plan and APS Configuration

Figure 1 - Overall Location Plan for each Ventilation Building for Central Kowloon Route (CKR Project)

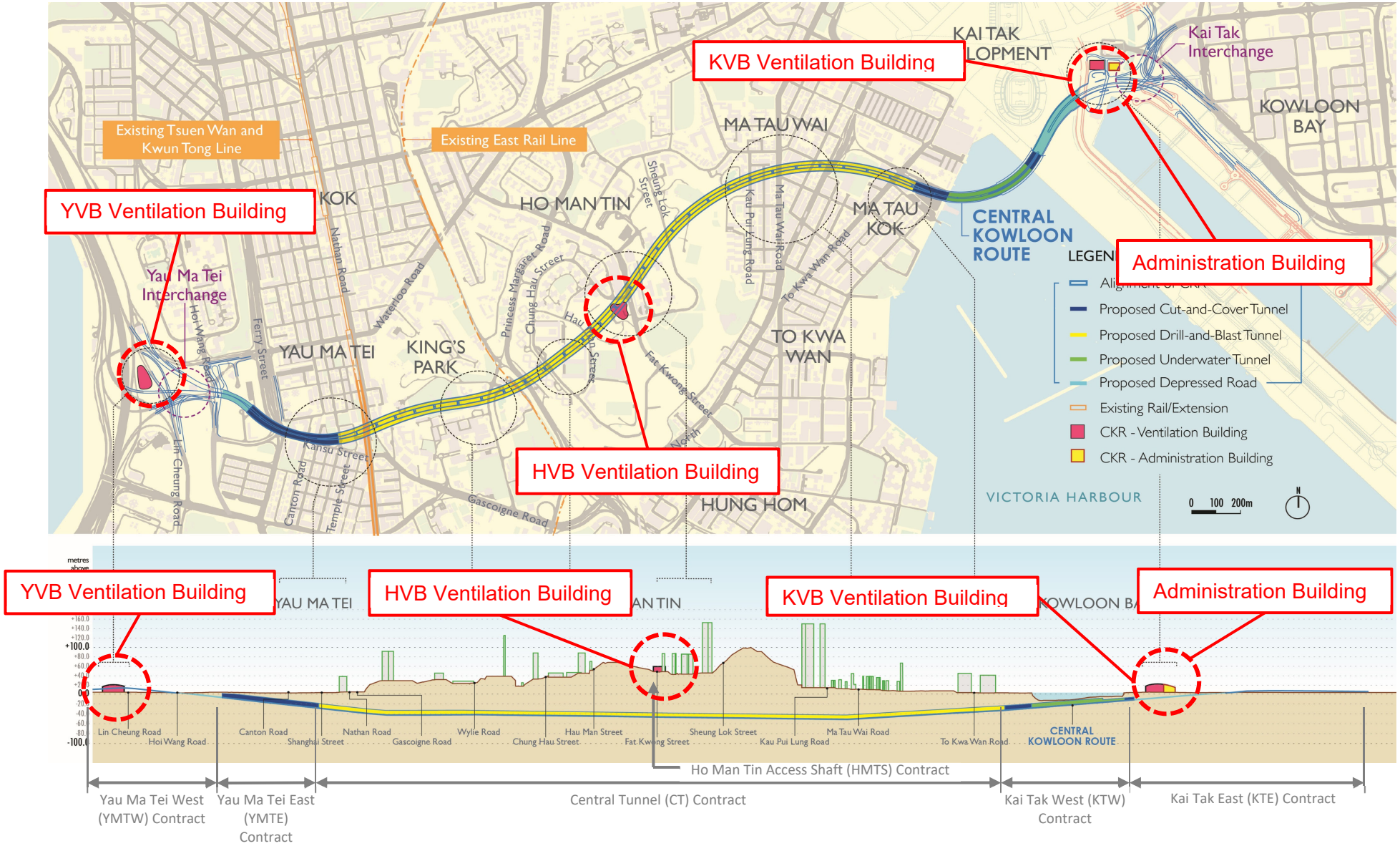

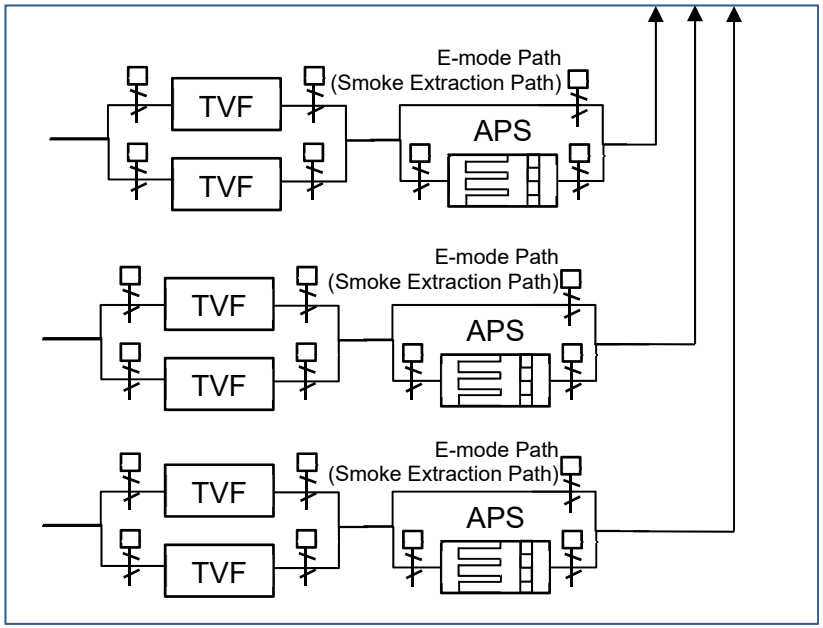

Figure 2 - Diagram for each APS/TVF Module on each Ventilation Building for Central Kowloon Route

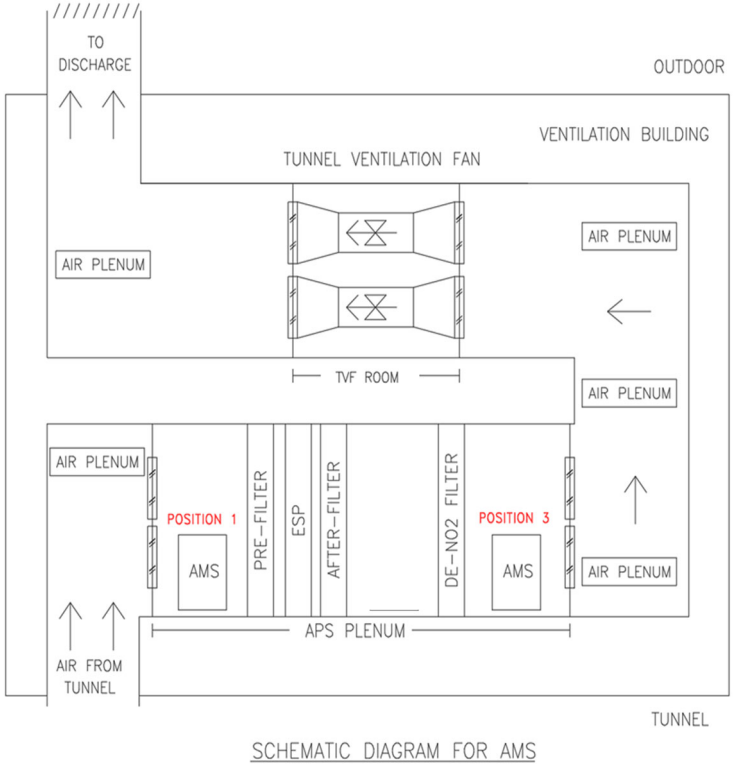

Figure 3 - Diagram for AMS on each APS/TVF Module